This is a digital copy of a book that was preserved for generations on library shelves before it was carefully scanned by Google as part of a project to make the world's books discoverable online.

It has survived long enough for the copyright to expire and the book to enter the public domain. A public domain book is one that was never subject to copyright or whose legal copyright term has expired. Whether a book is in the public domain may vary country to country. Public domain books are our gateways to the past, representing a wealth of history, culture and knowledge that's often difficult to discover.

Marks, notations and other marginalia present in the original volume will appear in this file - a reminder of this book's long journey from the publisher to a library and finally to you.

Usage guidelines

Google is proud to partner with libraries to digitize public domain materials and make them widely accessible. Public domain books belong to the public and we are merely their custodians. Nevertheless, this work is expensive, so in order to keep providing this resource, we have taken steps to prevent abuse by commercial parties, including placing technical restrictions on automated querying.

We also ask that you:

+ *Make non-commercial use of the files* We designed Google Book Search for use by individuals, and we request that you use these files for personal, non-commercial purposes.
+ *Refrain from automated querying* Do not send automated queries of any sort to Google's system: If you are conducting research on machine translation, optical character recognition or other areas where access to a large amount of text is helpful, please contact us. We encourage the use of public domain materials for these purposes and may be able to help.
+ *Maintain attribution* The Google "watermark" you see on each file is essential for informing people about this project and helping them find additional materials through Google Book Search. Please do not remove it.
+ *Keep it legal* Whatever your use, remember that you are responsible for ensuring that what you are doing is legal. Do not assume that just because we believe a book is in the public domain for users in the United States, that the work is also in the public domain for users in other countries. Whether a book is still in copyright varies from country to country, and we can't offer guidance on whether any specific use of any specific book is allowed. Please do not assume that a book's appearance in Google Book Search means it can be used in any manner anywhere in the world. Copyright infringement liability can be quite severe.

About Google Book Search

Google's mission is to organize the world's information and to make it universally accessible and useful. Google Book Search helps readers discover the world's books while helping authors and publishers reach new audiences. You can search through the full text of this book on the web at `http://books.google.com/`

COPY 6

Author and Title

U.S. Supreme Court
U.S. Reports

Call Number	Volume	Copy
KF 101 U55	256	6

THIS BOOK DOES NOT CIRCULATE
OUTSIDE THE BUILDING

NAME	LOCATION
K. Smith	S-X
	SEP 1 8 1985

U.S. Supreme Court
U.S. Reports

KF 101 U55	vol. 256	copy 6

UNITED STATES REPORTS

VOLUME 256

CASES ADJUDGED

IN

THE SUPREME COURT

AT

OCTOBER TERM, 1920

FROM APRIL 11, 1921, TO JUNE 6, 1921

ERNEST KNAEBEL

REPORTER

LAW LIBRARY
AUG 10 1933
UNIVERSITY OF CALIFORNIA
DAVIS

THE BANKS LAW PUBLISHING CO.
NEW YORK
1922

COPYRIGHT, 1922, BY
THE BANKS LAW PUBLISHING COMPANY

NOTICE

The price of this volume is fixed by statute (§ 226, Judicial Code, 36 U. S. Statutes at Large, 1153) at one dollar and seventy-five cents. Cash must accompany the order. The purchaser must pay the cost of delivery.

REPRINTED IN TAIWAN

JUSTICES

OF THE

SUPREME COURT

DURING THE TIME OF THESE REPORTS.[1]

EDWARD DOUGLASS WHITE, CHIEF JUSTICE.[2]
JOSEPH McKENNA, ASSOCIATE JUSTICE.
OLIVER WENDELL HOLMES, ASSOCIATE JUSTICE.
WILLIAM R. DAY, ASSOCIATE JUSTICE.
WILLIS VAN DEVANTER, ASSOCIATE JUSTICE.
MAHLON PITNEY, ASSOCIATE JUSTICE.
JAMES CLARK McREYNOLDS, ASSOCIATE JUSTICE.
LOUIS D. BRANDEIS, ASSOCIATE JUSTICE.
JOHN H. CLARKE, ASSOCIATE JUSTICE.

HARRY M. DAUGHERTY, ATTORNEY GENERAL.
WILLIAM L. FRIERSON, SOLICITOR GENERAL.[3]
JAMES M. BECK, SOLICITOR GENERAL.[3]
JAMES D. MAHER, CLERK.[4]
FRANK KEY GREEN, MARSHAL.

[1] For allotment of The Chief Justice and Associate Justices among the several circuits, see next page.

[2] Mr. Chief Justice White died on May 19, 1921. See page v, *post*. Further reference to him will appear in a later volume.

[3] Mr. Frierson tendered his resignation March 4, 1921, to become effective on the appointment of his successor. Mr. James M. Beck, of New Jersey, was nominated by the President on June 17, 1921, confirmed by the Senate on June 21, 1921, and took the oath of office on July 1, 1921.

[4] Mr. Maher died on June 3. 1921. See page viii, *post*.

SUPREME COURT OF THE UNITED STATES.

ALLOTMENT OF JUSTICES, OCTOBER TERM, 1916.[1]

ORDER: There having been an Associate Justice of this court appointed since the adjournment of the last term,

It is ordered, That the following allotment be made of the Chief Justice and Associate Justices of this court among the circuits agreeably to the act of Congress in such case made and provided, and that such allotment be entered of record, viz:

For the First Circuit, OLIVER WENDELL HOLMES, Associate Justice.

For the Second Circuit, LOUIS D. BRANDEIS, Associate Justice.

For the Third Circuit, MAHLON PITNEY, Associate Justice.

For the Fourth Circuit, EDWARD D. WHITE, Chief Justice.

For the Fifth Circuit, J. C. MCREYNOLDS, Associate Justice.

For the Sixth Circuit, WILLIAM R. DAY, Associate Justice.

For the Seventh Circuit, JOHN H. CLARKE, Associate Justice.

For the Eighth Circuit, WILLIS VAN DEVANTER, Associate Justice.

For the Ninth Circuit, JOSEPH MCKENNA, Associate Justice.

October 30, 1916.

[1] For next previous allotment see 241 U. S., p. iv.

SUPREME COURT OF THE UNITED STATES

TUESDAY, MAY 31, 1921.

PRESENT: MR. JUSTICE MCKENNA, MR. JUSTICE HOLMES, MR. JUSTICE DAY, MR. JUSTICE VAN DEVANTER, MR. JUSTICE PITNEY, MR. JUSTICE MCREYNOLDS, MR. JUSTICE BRANDEIS, and MR. JUSTICE CLARKE.

MR. JUSTICE MCKENNA said:

"GENTLEMEN OF THE BAR: This empty chair, and the sombre drapery upon it, announce that since the last sitting of the Court a grievous affliction has come to the country and to us, an affliction which to some of us and, it may be, to all of us, can never have complete solace. A great life has ceased to exist, one replete with achievements—achievements in many fields of endeavor, all typical and demonstrative of ability and merit, of which, to adopt the words of another, 'it would be difficult to say anything that would transcend the bounds of a just and decorous eulogy.' Eulogy, however, will be the purpose and appointment of another time, and of other lips than mine. To mine now is the humbler and sadder deputation to express the sorrow of my brethren and myself at the death of our Chief Justice. But, expressing a more poignant and personal sorrow, may I not say, at the death of our associate in duties, our companion in council, our friend and intimate? He was all of these to us, and by them animated and directed our work; his precedence veiled under a considerate courtesy, our intercourse with him made a real enjoyment. I use the word 'enjoyment' because I speak in retrospection—speak of a time upon which sorrow had not cast its shadow.

"I hope I shall be pardoned these personal considerations. I do not overlook or underestimate the greater abilities that attracted the Nation's commendation in his life, and have caused the Nation's sorrow in his death—a sorrow in which we participate. But his faculties need not be distinguished; they were comprehensive in their action, had connection and purpose, were as manifest in private life as in official life.

"In private life he was a gentleman in the best sense of that much-abused word. He was considerately kind and courteous, and not in passing show, for he was incapable of artifice or dissimulation.

"In official life he had a high and earnest sense of duty; and duty to a judge has a special incentive, its object is justice and justice to the fullness of its definition: 'The constant and perpetual wish to render to every man his rights.' This wish was ever in the Chief Justice's mind, its insistent motive and animation. And in this duty to the individual serious questions came—questions of the validity of laws and executive acts, and the ordination of the powers of the United States and the States, granted or reserved to them, respectively, by the Constitution. To the questions thus presented the Chief Justice directed a consideration proportioned to their immediate and ultimate effect, the public welfare depending upon them. He realized, as all of us must realize, that the necessity of passing upon them marks the place and power of the Federal Judiciary in our scheme of government, the condition, it may be, of its stability and permanence, preserving always the splendid conception of the Constitution—one sovereignty constituted of many, it being supreme within the sphere of its powers, they being supreme within the sphere of their powers, resulting in governments, national and state, competent to encounter and resolve the problems incident to or emergent in the lives and affairs of a people.

"This is of the past in barest outline. What of the

future? Anticipating it, I see no shadow on his fame, no lessening of his example nor of the impression his life and services have made upon the country. I venture comparisons. I make full concession of the recognized and illustrious merit of those who have preceded him. I make full admission, in assured prophecy, of the abilities of those who will succeed him; yet, considering his qualities and their exercises, I dare to say that, as he has attained, he will forever keep, a distinct eminence among the Chief Justices of the United States.

"In testimony of his worth, in tribute and respect to his memory, the Court will adjourn until to-morrow at 12 o'clock."

SUPREME COURT OF THE UNITED STATES

MONDAY, JUNE 6, 1921.

PRESENT: MR. JUSTICE MCKENNA, MR. JUSTICE HOLMES, MR. JUSTICE DAY, MR. JUSTICE VAN DEVANTER, MR. JUSTICE PITNEY, MR. JUSTICE MCREYNOLDS, MR. JUSTICE BRANDEIS, and MR. JUSTICE CLARKE.

MR. JUSTICE MCKENNA said:

"GENTLEMEN OF THE BAR: It is my sad office to announce that another sorrow has come to the Court in the death of Mr. James D. Maher, its clerk—a sorrow following close upon that of which this empty chair is testimony, a sorrow having particular emphasis, and we are impelled to its expression and manifestation.

"Our association with him was personal and official. Where personal, he exhibited an attractive courtesy; where official, he impressed a sense of ability and that trust could be reposed in him.

"His connection with the Court began over a half a century ago—to be exact, in 1865,—as a page, and from that humble beginning he rose successively to be junior clerk, deputy clerk, and clerk. By this advancement his ability was availed of as much as rewarded; and it was justified to the last moment of his service—service ending only with his life.

"What more need be said? The successive promotions proclaim his merit; verbal enunciation or eulogy of it is an unnecessary supplement. I, however, venture some particulars. Among other powers he had the power of taking pains, and that in high degree. It was a constituent of his efficiency which gave an assurance of exact-

ness and confident reliance upon whatever he did or was to do.

"And he thought nothing a trouble; he was prompt, therefore, to grant any request or obey any direction, heightening thereby his courtesy or duty. In this I am repeating the appreciation of our Chief Justice, who, in greater degree than the rest of us, had occasion to demand or receive the aid of Mr. Maher, and could make, therefore, an exact estimate of him and his services. And, of course, his exact and comprehensive knowledge of the procedural precedents and practices of the court was of inestimable service to the members of the bar, and he was always ready to render that service.

"One other word in summary of his merit and of our appreciation of it: In private life he was as exact to fulfill his duties and obligations as he was in official life, and his example and services will remain with us a cherished and intimate memory; to those who succeed us they will be an instructive tradition."

TABLE OF CASES REPORTED

PAGE

Addy S. S. &. Commerce Corp., *Ex parte* . . 417
Ætna Explosives Co., United States *v.* . . 402
Albers *v.* United States 706
Allied Machinery Co., Lehigh Valley R. R. *v.* . 704
Alpha Portland Cement Co., State of New York *ex rel.*, State Tax Commr. of New York *v.* . 702
American Bank & Trust Co. *v.* Federal Reserve Bank of Atlanta 350
American Can Co., United States *v.* 706
American Chicle Co., United States *v.* . . . 446
American Steel Foundries *v.* Whitehead, Commr. of Patents 40
Anchor Oil Co. *v.* Gray 519
Anderson, Collector of Internal Revenue, *v.* New York Life Ins. Co. 686, 696
Anderson-Tully Co., Vicksburg, Shreveport & Pacific Ry. *v.* 408
Andrews Paper Co., District of Columbia *v.* . . 582
Applebaum *v.* United States 704
Arkansas, State of, *v.* State of Mississippi . . 28
Associated Oil Co. *v.* Miller 697
Atchison, Topeka & Santa Fe Ry., Flack, Admx., *v.* 690
Atchison, Topeka & Santa Fe Ry. *v.* United States 205
Auditore Contracting Co. *v.* Foreign Trade Banking Corp. 686
Ault, Missouri Pacific R. R. *v.* 554

Baechtel, Davis, Director General of Railroads, *v.* 698
Bailey *v.* Mississippi Home Tel. Co. 692
Baldwin Co. *v.* Howard Co. 35
Bank of Minden *v.* Clement, Admx. 126
Barber *v.* Otis Motor Sales Co. 693

PAGE

Baxter *v.* Safford 694
Bethlehem Motors Corp. *v.* Flynt, Sheriff . . 421
Blanset *v.* Cardin, Guardian 319
Block *v.* Hirsh 135
Boehm *v.* United States 703
Boston, Cape Cod & New York Canal Co., Seaboard Transp. Co. *v.* 692
Boston & Maine R. R. *v.* Desmond 694
Bowling, United States *v.* 484
Bowman, Attorney General, *v.* Continental Oil Co. 642
Brooklyn Union Gas Co., City of New York *v.* . 683
Brown *v.* United States 335
Brown Holding Co. *v.* Feldman 170
Browne *v.* Thorn *et. al.*, Partners 689
Bullock Tractor Co. *v.* Knapp *et. al.*, Partners . 697
Burdeau *v.* McDowell 465
Burke Construction Co., Kline *v.* 688
Burrell, Treasurer, Dane *v.* 705

Calumet Construction Co., Shedd *v.* . . . 691
Cardin, Guardian, Blanset *v.* 319
C. C. Hartwell Co., *Ex parte* 684
Chase, Jr., a Minor, *v.* United States . . . 1
Chesapeake & Ohio Ry., Wall, Admx., *v.* . . 125
Chicago & Northwestern Ry., Keogh *v.* . . 699
Chicago Railway Equipment Co. *v.* Laughlin . 698
Choctaw Nation, Heirs of Garland *v.* 439
Choctaw, Oklahoma & Gulf R. R. *v.* Mackey, County Treasurer 531
Clement, Admx., Bank of Minden *v.* 126
Clyne *v.* Weinbrenner, Sheriff 695
Coca-Cola Co., Old Dominion Beverage Corp. *v.* . 703
Cole, State Controller, Nickel *et. al.*, Trustees, *v.* . 222
Commissioner of Patents, Henderson *v.* . . 699
Conkling Mining Co., Silver King Coalition Mines Co. *v.* 18
Connett, City of New York *v.* 693

PAGE
Continental Oil Co., Bowman, Attorney General, *v.* 642
Cudahy Packing Co., Frey & Son, Inc., *v.* . . 208
Culpepper *v.* Ocheltree 483
Curtis Publishing Co., Federal Trade Comm. *v.* . 688

Dahlgren, Pierce, Trustee, *v.* 682, 692
Dane *v.* Burrell, Treasurer 705
Dane *v.* Jackson, Treasurer & Receiver General . 589
Darlington *v.* Mager, Collector of Internal Revenue 682
Davidson *v.* United States 696
Davis, Director General of Railroads, *v.* Baechtel . 698
De Camp Glass Casket Co., Hamilton *v.* . . 703
De Freis, née Pilipo, Scott *v.* 700
Desmond, Boston & Maine R. R. *v.* 694
Diamond Iron Works, Filer & Stowell Co. *v.* . 691
Di Donato, Philadelphia & Reading Ry. *v.* . . 327
Dillon *v.* Gloss, Deputy Collector of Internal Revenue 368
Director General of Railroads *v.* Baechtel . . 698
Director General of Railroads *v.* Wilson, Admx. . 700
District of Columbia *v.* Andrews Paper Co. . . 582
District of Columbia, Harris *v.* 650
District of Columbia *v.* Lisner 582
District of Columbia *v.* Saks & Co. 582
Doscher *et al.*, Exrs., Karasik *et al.*, Trustees, *v.* . 695
Dwelling Building & Loan Assn. *v.* MacHenry, Trustee 685
Dysart *v.* United States 694

Economy Light & Power Co. *v.* United States . 113
E. H. Freeman Elec. Co., Weber Elec. Co. *v.* . 668
Eisner, New York Trust Co. *et. al.*, Exrs., *v.* . 345
Ennis, City of, Houston & Texas Central R. R. *v.* . 684
Erie R. R. *v.* Ward 696
Esteve Bros. & Co., Western Union Tel. Co. *v.* . 566
Ex parte Exporters of Manufacturers' Products, Inc. 684
Ex parte Hartwell Co. 684

PAGE
Ex parte Hollander 683
Ex parte Hussein Lutfi Bey, Master . . . 616
Ex parte Lincoln Gas & Elec. Light Co. . . 512
Ex parte Matthew Addy S. S. & Commerce Corp. 417
Ex parte Moran 683
Ex parte National Park Bank of New York . 131
Ex parte State of Louisiana 685
Ex parte State of New York *et al.* (No. 1) . . . 490
Ex parte State of New York *et al.*, Owners, etc. (No. 2) 503
Ex parte Riddel 684
Exporters of Manufacturers' Products, Inc., *Ex parte* 684

Falls City, The S. S., Standard Oil Co., Owner, *v.* . 693
Federal Reserve Bank of Atlanta, American Bank & Trust Co. *v.* 350
Federal Trade Comm. *v.* Curtis Publishing Co. . 688
Federal Trade Comm. *v.* Winsted Hosiery Co. . 688
Felder, Receiver, Green *v.* 704
Feldman, Marcus Brown Holding Co. *v.* . . 170
Fidelity Mutual Life Ins. Co., Frederick, Trustee, *v.* 395
Filer & Stowell Co. *v.* Diamond Iron Works . . 691
Flack, Admx., *v.* Atchison, Topeka & Santa Fe Ry. 690
Fleischer, McLaren, Admr., *v.* 477
Flowers *v.* United States 689
Flynt, Sheriff, Bethlehem Motors Corp. *v.* . . 421
Foley, Payne, Agent, *v.* 690
Foley, Standard Portland Cement Co. *v.* . . 693
Ford Motor Co. *v.* Hotel Woodward Co. . . 698
Foreign Trade Banking Corp., Auditore Contracting Co. *v.* 686
Frazier, Admx., *v.* Interstate R. R. . . . 703
Frederick, Trustee, *v.* Fidelity Mutual Life Ins. Co. 395
Freeman Elec. Co., Weber Elec. Co. *v.* . . 668
Frey & Son, Inc., *v.* Cudahy Packing Co. . . 208
Fruchter, New York, New Haven & Hartford R. R. *v.* 686

PAGE

Fruchter, an Infant, New York, New Haven & Hartford R. R. *v.* 686

Galbraith *v.* Vallely, Trustee 46
Garland, Heirs of, *v.* Choctaw Nation . . 439
Gaston, Williams & Wigmore *v.* Warner . . 687
Georgian *v.* Uhl, Acting Commr. of Immigration . 701
Gilpin, a Minor, *v.* United States 10
Gloss, Deputy Collector of Internal Revenue, Dillon *v.* 368
Grant *v.* United States 700
Gratz, McKee *v.* 687
Gray, Anchor Oil Co. *v.* 519
Green *v.* Felder, Receiver 704
Green *v.* United States 689
Gul Djemal, The, *Ex parte* 616
Gustafson *et al.*, Copartners, Michigan Central R. R. *v.* 698

Hagerman, Collector, State of Missouri *ex rel.*, St. Louis & East St. Louis Elec. Ry. *v.* . . . 314
Hamilton *v.* De Camp Glass Casket Co. . . 703
Hardin *v.* Union Trust Co. 699
Harris *v.* District of Columbia 650
Hartwell Co., *Ex parte* 684
Haywood *v.* United States 689
Heitmuller *v.* Stokes 359
Henderson *v.* Commissioner of Patents . . . 699
Herman & Herman, Inc., *v.* The S. S. Owego . . 701
Hirsh, Block *v.* 135
Hogarth Shipping Co., Texas Co. *v.* 619
Hollander, *Ex parte* 683
Hopkins, County Treasurer, Hudson *v.* . . 681
Hotel Woodward Co., Ford Motor Co. *v.* . . 698
Houston & Texas Central R. R. *v.* City of Ennis . 684
Howard Co., Baldwin Co. *v.* 35
Hudson *v.* Hopkins, County Treasurer . . 681

PAGE
Hunt, Exr., *v.* United States 706
Hussein Lutfi Bey, Master, *Ex parte* 616
Hutto, United States *v.* 524, 530

Interstate R. R., Frazier, Admx., *v.* 703

Jackson, Treasurer & Receiver General, Dane *v.* . 589
Jacobson *v.* United States 703
John Lysaght, Ltd., Lehigh Valley R. R. *v.* . . 704
Jones *v.* Page, Receiver 696

Kansas City Southern Ry. *v.* Road Improvement Dist. No. 6, Little River County 658
Karasik *et al.*, Trustees, *v.* Doscher *et al.*, Exrs. . 695
Keogh *v.* Chicago & Northwestern Ry. . . . 699
King, Palmer *v.* 682
Kline *v.* Burke Construction Co. 688
Knapp *et al.*, Partners, Bullock Tractor Co. *v.* . 697
Krichman *v.* United States 363

La Belle Iron Works *v.* United States 377
Laughlin, Chicago Railway Equipment Co. *v.* . 698
Lehigh Valley R. R. *v.* Allied Machinery Co. . 704
Lehigh Valley R. R. *v.* John Lysaght, Ltd. . . 704
Lincoln Gas & Elec. Light Co., *Ex parte* . . 512
Lisner, District of Columbia *v.* 582
Little River County, Road Improvement Dist. No. 6, Kansas City Southern Ry. *v.* 658
Louisiana, State of, *Ex parte* 685
Lutfi Bey, Master, *Ex parte* 616
Lyndon, Wagner Elec. Mfg. Co. *v.* 690
Lysaght, John, Ltd., Lehigh Valley R. R. *v.* . 704
Lyttle, Receiver & Trustee, Samuel Vernon Estate, Inc., *v.* 692

McCurdy, County Treasurer, McGuire, Admr., *v.* . 681
McDonald, Commandant, Wessels *v.* 705
McDowell, Burdeau *v.* 465

PAGE
McGrew Coal Co., Missouri Pacific Ry. *v.* . . . 134
McGuire, Admr., *v.* McCurdy, County Treasurer . 681
McKee *v.* Gratz 687
McKittrick Oil Co. *v.* Southern Pacific R. R. 685, 695
McLaren, Admr., *v.* Fleischer 477
MacHenry, Trustee, Dwelling Building & Loan Assn. *v.* 685
Mackey, County Treasurer, Choctaw, Oklahoma & Gulf R. R. *v.* 531
Mager, Collector of Internal Revenue, Darlington *v.* 682
Marcus Brown Holding Co. *v.* Feldman . . 170
Mark Owen & Co., Michigan Central R. R. *v.* . 427
Martin *v.* Presidio Mining Co. 694
Martinson, Sheriff, State of Minnesota *ex rel.* Whipple *v.* 41
Matthew Addy S. S. & Commerce Corp., *Ex parte* . 417
Merchants' Natl. Bank of Richmond *v.* City of Richmond 635
Michigan Central R. R. *v.* Gustafson *et al.*, Copartners 698
Michigan Central R. R. *v.* Mark Owen & Co. . 427
Middlekamp, State Treasurer, St. Louis-San Francisco Ry. *v.* 226
Midway Irrigation Co., Snake Creek Mining & Tunnel Co. *v.* 687
Miller, Associated Oil Co. *v.* 697
Miller *v.* Weinbrenner, Sheriff 695
Miller & Lux, Inc., *v.* Sacramento & San Joaquin Drainage Dist. 129
Minden, Bank of, *v.* Clement, Admx. 126
Minnesota, State of, *ex rel.* Whipple, *v.* Martinson, Sheriff 41
Minnesota, State of, State of North Dakota *v.* . 220
Mississippi, State of, State of Arkansas *v.* . . 23
Mississippi Home Tel. Co., Bailey *v.* 692
Missouri, State of, *ex rel.* Hagerman, Collector, St. Louis & East St. Louis Elec. Ry. *v.* . . . 314

PAGE
Missouri, Kansas & Texas Ry. *v.* United States . 610
Missouri, Kansas & Texas Ry. *v.* United States Mortgage & Trust Co. 699
Missouri, Kansas & Texas Ry. *v.* Zuber . . 681
Missouri Pacific R. R. *v.* Ault 554
Missouri Pacific Ry. *v.* McGrew Coal Co. . . 134
Moran, *Ex parte* 683
Morgan *et al.*, Exrs., Ownbey *v.* 94

National Equipment Co., Panoulias *v.* . . . 691
National Park Bank of New York, *Ex parte* . 131
Nevada, State of, Nickel *et al.*, Trustees, *v.* . . 222
Newberry *v.* United States 232
New Jersey, State of, State of New York *v.* . . 296
New York, City of, *v.* Brooklyn Union Gas Co. . 683
New York, City of, *v.* Connett 693
New York, State of, *et al.*, *Ex parte* (No. 1) . . 490
New York, State of, *et al.*, Owners, etc., *Ex parte* (No. 2) 503
New York, State of, *v.* State of New Jersey . . 296
New York, State of, *ex rel.* Alpha Portland Cement Co., State Tax Commr. of New York *v.* . . 702
New York Central & Hudson River R. R. *v.* York & Whitney Co. 406
New York Life Ins. Co., Anderson, Collector of Internal Revenue *v.* 686, 696
New York, New Haven & Hartford R. R. *v.* Fruchter 686
New York, New Haven & Hartford R. R. *v.* Fruchter, an Infant 686
New York Tax Commr. *v.* State of New York *ex rel.* Alpha Portland Cement Co. 702
New York Trust Co. *et al.*, Exrs., *v.* Eisner . . 345
Nichols & Co., Yazoo & Mississippi Valley R. R. *v.* 540
Nickel *et al.*, Trustees, *v.* Cole, State Controller . 222
Nickel *et al.*, Trustees, *v.* State of Nevada . . 222
Norfolk-Southern R. R. *v.* Owens 565

PAGE
North Dakota, State of, *v.* State of Minnesota . 220
Northern Pacific Ry., United States *v.* . . 51

Ocheltree, Culpepper *v.* 483
O'Connor *v.* Slaker, Admr. 690
Oklahoma, State of, *v.* State of Texas . . 70, 602
Old Dominion Beverage Corp. *v.* Coca-Cola Co. . 703
Olympian Dredging Co., Southern Pacific Co. *v.* . 687
Onepiece Bifocal Lens Co., Scheuerle, Admx., *v.* . 702
Ople *v.* Weinbrenner, Sheriff 695
Otis Motor Sales Co., Barber *v.* . . . 693
Owego, The S. S., Herman & Herman, Inc., *v.* . 701
Owen & Co., Michigan Central R. R. *v.* . . 427
Owens, Norfolk-Southern R. R. *v.* . . . 565
Ownbey *v.* Morgan *et al.*, Exrs. 94

Page, Receiver, Jones *v.* 696
Palmer *v.* King 682
Panoulias *v.* National Equipment Co. . . . 691
Passaic Valley Sewerage Commrs., State of New York *v.* 296
Payne, Agent, *v.* Foley 690
Pendleton, Judge, Sistrunk *v.* 702
Pfitsch, United States *v.* 547
Philadelphia & Reading Ry. *v.* Di Donato . . 327
Philadelphia & Reading Ry. *v.* Polk . . . 332
Pierce, Trustee, *v.* Dahlgren . . . 682, 692
Pilipo, De Freis, née, Scott *v.* 700
Polk, Philadelphia & Reading Ry. *v.* . . . 332
Poston, Western Union Tel. Co. *v.* . . . 662
Presidio Mining Co., Martin *v.* 694
Princess Amusement Co. *v.* Wells . . . 701
Privett *v.* United States 201
Prohaska, Widow, *v.* St. Paul Fire & Marine Ins. Co. 702

Queen City, The Steam Tug, *Ex parte* . . 503

PAGE

Railroad Comm. of Wisconsin, Wisconsin Minnesota Light & Power Co. *v.* 705
Redtop Electric Co., Treat *v.* 697
Richmond, City of, Merchants' Natl. Bank of Richmond *v.* 635
Riddle, *Ex parte* 684
Road Improvement Dist. No. 6, Little River County, Kansas City Southern Ry. *v.* 658
Rosenblatt *v.* United States 695
Rousso *v.* Solomon 701
R. P. Andrews Paper Co., District of Columbia *v.* . 582
R. S. Howard Co., Baldwin Co. *v.* 35
Rudolph *et al.*, Commrs., *v.* Schwartz 701

Sablowski *v.* United States 697
Sacramento & San Joaquin Drainage Dist., Miller & Lux, Inc., *v.* 129
Safford, Baxter *v.* 694
St. Louis & East St. Louis Elec. Ry. *v.* State of Missouri *ex rel.* Hagerman, Collector . . 314
St. Louis-San Francisco Ry. *v.* Middlekamp, State Treasurer 226
St. Paul Fire & Marine Ins. Co., Prohaska, Widow, *v.* 702
Saks & Co., District of Columbia *v.* 582
Samuel Vernon Estate, Inc., *v.* Lyttle, Receiver & Trustee 692
Scheuerle, Admx., *v.* Onepiece Bifocal Lens Co. . 702
Schwartz, Rudolph *et al.*, Commrs., *v.* 701
Scott *v.* De Freis, née Pilipo 700
Seaboard Air Line Ry. *v.* United States . . 655
Seaboard Transp. Co. *v.* Boston, Cape Cod & New York Canal Co. 692
Shedd *v.* Calumet Construction Co. 691
Silver King Coalition Mines Co. *v.* Conkling Mining Co. 18
Sischo, United States *v.* 688
Sistrunk *v.* Pendleton, Judge 702

PAGE
Slaker, Admr., O'Connor *v.* 690
Smith, Clyde A., *v.* United States . . . 691
Smith, J. Sidney, *v.* United States . . . 690
Smith, L. P. & J. A., United States *v.* . . . 11
Smith, Attorney General, *v.* Wofford Oil Co. . 705
Smith, Exr., Yates *v.* 693
Snake Creek Mining & Tunnel Co. *v.* Midway Irrigation Co. 687
Solomon, Rousso *v.* 701
Southern Pacific Co. *v.* Olympian Dredging Co. . 687
Southern Pacific R. R., McKittrick Oil Co. *v.* . 685, 695
Standard Oil Co., Owner, *v.* The S. S. Falls City . 693
Standard Portland Cement Co. *v.* Foley . . 693
State Tax Commr. of New York *v.* State of New York *ex rel.* Alpha Portland Cement Co. . . 702
Stokes, Heitmuller *v.* 359
Sutton, Trustee, *v.* United States . . . 575

Tax Commr. of New York *v.* State of New York *ex rel.* Alpha Portland Cement Co. . . 702
Texas, State of, State of Oklahoma *v.* . . 70, 602
Texas Co., Hogarth Shipping Co. *v.* . . . 619
Thompson *v.* United States 691
Thorn *et al.*, Partners, Browne *v.* . . . 689
Treat *v.* Redtop Electric Co. 697

Uhl, Acting Commr. of Immigration, Georgian *v.* . 701
Union Trust Co., Hardin *v.* 699
United States, Intervener, State of Oklahoma *v.* State of Texas 70, 602
United States *v.* Ætna Explosives Co. . . 402
United States, Albers *v.* 706
United States *v.* American Can Co. . . . 706
United States *v.* American Chicle Co. . . . 446
United States, Applebaum *v.* 704
United States, Atchison, Topeka & Santa Fe Ry. *v.* 205
United States, Boehm *v.* 703

PAGE
United States *v.* Bowling 484
United States, Brown *v.* 335
United States, Chase, Jr., a Minor, *v.* . . 1
United States, Davidson *v.* 696
United States, Dysart *v.* 694
United States, Economy Light & Power Co. *v.* . 113
United States, Flowers *v.* 689
United States, Gilpin, a Minor, *v.* 10
United States, Grant *v.* 700
United States, Green *v.* 689
United States, Haywood *v.* 689
United States, Hunt, Exr., *v.* 706
United States *v.* Hutto 524, 530
United States, Jacobson *v.* 703
United States, Krichman *v.* 363
United States, La Belle Iron Works *v.* . . . 377
United States, Missouri, Kansas & Texas Ry. *v.* . 610
United States, Newberry *v.* 232
United States *v.* Northern Pacific Ry. 51
United States *v.* Pfitsch 547
United States, Privett *v.* 201
United States, Rosenblatt *v.* 695
United States, Sablowski *v.* 697
United States, Seaboard Air Line Ry. *v.* . . 655
United States *v.* Sischo 688
United States, Clyde A. Smith *v.* 691
United States, J. Sidney Smith *v.* 690
United States *v.* L. P. & J. A. Smith 11
United States, Sutton, Trustee, *v.* 575
United States, Thompson *v.* 691
United States, Vincenti *v.* 700
United States, Weathers *v.* 696
United States, Wehde *v.* 703
United States *v.* Woodward *et al.*, Exrs. . . 632
United States *v.* Yuginovich 450
United States Mortgage & Trust Co., Missouri, Kansas & Texas Ry. *v.* 699

PAGE
Vallely, Trustee, Galbraith *v.* 46
Vernon Estate, Inc., *v.* Lyttle, Receiver & Trustee 692
Vicksburg, Shreveport & Pacific Ry. *v.* Anderson-Tully Co. 408
Vincenti *v.* United States 700

Wagner Elec. Mfg. Co. *v.* Lyndon . . . 690
Walker Bros. Co. *v.* W. & H. Walker, Inc. . . 702
Walker, W. & H., Inc., Walker Bros. Co. *v.* . . 702
Wall, Admx., *v.* Chesapeake & Ohio Ry. . . 125
Ward, Erie R. R. *v.* 696
Warner, Gaston, Williams & Wigmore *v.* . . 687
Weathers *v.* United States 696
Weber Elec. Co. *v.* Freeman Elec. Co. . . . 668
Wehde *v.* United States 703
Weinbrenner, Sheriff, Clyne *v.* 695
Weinbrenner, Sheriff, Miller *v.* 695
Weinbrenner, Sheriff, Ople *v.* 695
Wells, Princess Amusement Co. *v.* 701
Wessels *v.* McDonald, Commandant . . . 705
Western Union Tel. Co. *v.* Esteve Bros. & Co. . 566
Western Union Tel. Co. *v.* Poston . . . 662
W. & H. Walker, Inc., Walker Bros. Co. *v.* . . 702
Whipple, State of Minnesota *ex rel.*, *v.* Martinson, Sheriff 41
White, Commr. of Immigration, Yee Won *v.* . 399
Whitehead, Commr. of Patents, American Steel Foundries *v.* 40
Wilson, Admx., Director General of Railroads *v.* . 700
Winsted Hosiery Co., Federal Trade Comm. *v.* . 688
Wisconsin Minnesota Light & Power Co. *v.* Railroad Comm. of Wisconsin 705
Wisconsin Railroad Comm., Wisconsin Minnesota Light & Power Co. *v.* 705
Wofford Oil Co., Smith, Attorney General, *v.* . 705
Won, Yee, *v.* White, Commr. of Immigration . 399

PAGE

Woodward *et al.*, Exrs., United States *v.* . . . 632
Woodward Hotel Co., Ford Motor Co. *v.* . . . 698

Yates *v.* Smith, Exr. 693
Yazoo & Mississippi Valley R. R. *v.* Nichols & Co. 540
Yee Won *v.* White, Commr. of Immigration . 399
York & Whitney Co. *v.* New York Central & Hudson River R. R. 406
Yuginovich, United States *v.* 450

Zuber, Missouri, Kansas & Texas Ry. *v.* . . . 681

TABLE OF CASES

CITED IN OPINIONS.

PAGE

Acock *v.* Linn, 1 Harp. 368 105
Adams *v.* New York, 192 U. S. 585 474
Aetna Explosives Co. *v.* United States, 9 Cust. App. 298 402, 403
Alexander *v.* Taylor, 62 N. Car. 36 105
American Banana Co. *v.* United Fruit Co., 213 U. S. 347 629
American Bank & Trust Co. *v.* Federal Reserve Bank, 269 Fed. Rep. 4 351, 356
American Steel Foundries, *In re*, 49 App. D. C. 16; 258 Fed. Rep. 160 40, 41
American Steel Foundries *v.* Newton, 250 U. S. 655 41
Amoskeag Savgs. Bank *v.* Purdy, 231 U. S. 373 641
Anchor Oil Co. *v.* Gray, 257 Fed. Rep. 277 520, 523
Andrews *v.* Clerke, Carth. 25 105
Andrews Paper Co. *v.* District of Columbia, 49 App. D. C. 273; 263 Fed. Rep. 1017 583
Anne Arundel County Commrs. *v.* Duckett, 20 Md. 468 8
Arkadelphia Milling Co. *v.* St. Louis Southwestern Ry., 249 U. S. 134 517
Arkansas *v.* Mississippi, 252 U. S. 344 29
Arkansas *v.* Tennessee, 246 U. S. 158 30, 89
Armstrong *v.* Ashley, 204 U. S. 272 581
Askren *v.* Continental Oil Co., 252 U. S. 444 643, 645

PAGE

Atchison, T. & S. F. Ry. *v.* United States, 55 Ct. Clms. 528 205
Atkins *v.* Disintegrating Co., 18 Wall. 272 499
Atkins & Co. *v.* Moore, 212 U. S. 285 39
Atlantic & Pac. Tel. Co. *v.* Philadelphia, 190 U. S. 160 318
Ayers, *In re*, 123 U. S. 443 500
Babbitt *v.* Dutcher, 216 U. S. 102 49
Bailey *v.* United States, 109 U. S. 432 656
Bainbridge Grocery Co. *v.* Atlantic Coast Line R. R., 8 Ga. App. 677 544
Baker *v.* Cummings, 181 U. S. 117 88
Baldwin Co. *v.* Howard Co., 256 U. S. 35 40, 41
Baldwin Co. *v.* Howard Co., 233 Fed. Rep. 439; 238 *id.* 154 37
Ball *v.* Halsell, 161 U. S. 72 656
Baltimore Shipbuilding Co. *v.* Baltimore, 195 U. S. 375 538
Baltrip *v.* State, 30 Tex. Ct. App. 545 343
Bank of Commerce *v.* Seattle, 166 U. S. 463 641
Bank Line, Ltd. *v.* Arthur Capel & Co. [1919] A. C. 435 630
Bankers Trust Co. *v.* Tex. & Pac. Ry., 241 U. S. 295 357
Barnes *v.* District of Columbia, 91 U. S. 540 652–654
Battle *v.* United States, 209 U. S. 36 344

PAGE
Beard v. United States, 158 U. S. 550 335, 343
Beaver v. Taylor, 93 U. S. 46 215
Beckwith v. Commissioner of Patents, 252 U. S. 538 40
Beers v. Arkansas, 20 How. 527 497
Bell's Gap R. R. v. Pennsylvania, 134 U. S. 232 598, 599
Benjamin Moore & Co. v. Atchison, T. & S. F. Ry., 174 N. Y. S. 60 561
Bers v. Erie R. R., 225 N. Y. 543; 163 N. Y. S. 114 544, 547
Bethlehem Motors Corp. v. Flynt, 178 N. Car. 399 421
Bianchi & Sons v. Montpelier & W. R. R. R., 92 Vt. 319 544
Bilby v. Stewart, 246 U. S. 255 681
Billings v. United States, 232 U. S. 261 392
Bills of Lading, Matter of, 14 I. C. C. 346 432
Blair v. Chicago, 201 U. S. 400 587
Blair v. United States, 250 U. S. 273 278
Blake v. McClung, 172 U. S. 239 110
Blanset v. Cardin, 261 Fed. Rep. 309 319
Blevins v. Hines, 264 Fed. Rep. 1005 562
Blinn v. Dame, 207 Mass. 159 128
Block v. Hirsh, 256 U. S. 135 170, 198–200
Block v. Hirsh, 50 App. D. C. 73; 267 Fed. Rep. 631 136
Bodkin v. Edwards, 255 U. S. 221 482
Bodkin v. Edwards, 265 Fed. Rep. 621 482
Bolton v. Hines, 143 Ark. 601 561
Bonvillain, *In re*, 232 Fed. Rep. 372 128
Boston & Maine R. R. v. Hooker, 233 U. S. 97 567, 572
Bowling v. United States, 233 U. S. 528 204, 485
Boyd v. Buckingham & Co., 10 Humph. 434 105
Boyd v. United States, 116 U. S. 616 160, 474

PAGE
Boyer v. Boyer, 113 U. S. 689 639
Brader v. James, 246 U. S. 88 487
Bradley v. United States, 98 U. S. 104 579
Branson v. Bush, 251 U. S. 182 165, 316, 539, 660
Bright v. Boyd, 1 Story, 478; 2 Story, 608 581
Britt v. Patterson, 9 Ired. 197 105
Brock v. Keifer, 59 Okla. 5 327
Brown v. District of Columbia, 29 App. D. C. 273 654
Brown v. Houston, 114 U. S. 622 426
Brown v. United States, 113 U. S. 568 481
Brown v. United States, 250 U. S. 637 341
Brown v. United States, 257 Fed. Rep. 46 336, 341
Bruhnke v. La Crosse, 155 Wis. 485 652
Brushaber v. Union Pac. R. R., 240 U. S. 1 392
Burke v. Southern Pac. R. R., 234 U. S. 669 64
Burlingham v. Crouse, 228 U. S. 459 128, 397
Butler v. Goreley, 146 U. S. 303 656
Butterfield v. Byron, 153 Mass. 517 630
California v. San Pablo & Tulare R. R., 149 U. S. 308 362
California Powder Works v. Davis, 151 U. S. 389 681
Callender & Co. v. Duncan, 2 Bailey, 454 105
Campbell v. Morris, 3 Harr. & McH. 535 105
Canal Bank v. Hudson, 111 U. S. 66 581
Canidate v. Western Union Tel. Co., 203 Ala. 675 665
Carlson v. Curtiss, 234 U. S. 103 638
Cass Farm Co. v. Detroit, 181 U. S. 396 660
Castle v. Southern Ry., 112 S. Car. 407 563
Catawissa, The, 257 Fed. Rep. 863 563

PAGE

Cau *v.* Tex. & Pac. Ry., 194 U. S. 427 570
Central Bank of Washington *v.* Hume, 128 U. S. 195 128
Central of Georgia Ry. *v.* Wright, 207 U. S. 127 229
Central Pac. R. R. *v.* California, 162 U. S. 91 537
Chase, Jr. *v.* United States, 256 U. S. 1 10, 11
Chase *v.* United States, 238 Fed. Rep. 887; 261 *id.* 833 2, 6, 9
Chelentis *v.* Luckenbach S. S. Co., 247 U. S. 372 503
Cherokee Intermarriage Cases, 203 U. S. 76 8
Cherokee Nation *v.* Hitchcock, 187 U. S. 294 7
Chicago & Alton R. R. *v.* Industrial Comm., 288 Ill. 603 330
Chicago & Alton R. R. *v.* Tranbarger, 238 U. S. 67 198
Chicago, Burl. & Q. R. R. *v.* Chicago, 166 U. S. 226 165
Chicago, Burl. & Q. R. R. *v.* McGuire, 219 U. S. 549 158
Chicago, Mil. & St. P. Ry. *v.* Hoyt, 149 U. S. 1 630
Chicago & Northwestern Ry. *v.* Ochs, 249 U. S. 416 546, 547
Chicago, R. I. & Pac. R. R. *v.* Wagner, 25 L. D. 458 66
Chickasaw Cooperage Co. *v.* Yazoo & Miss. V. R. R., 141 Ark. 71 544
Child *v.* Boston, 4 Allen, 41 653
Chisholm *v.* Georgia, 2 Dall. 419 497
Choate *v.* Trapp, 224 U. S. 665 7
Choctaw, Okla. & Gulf R. R. *v.* Harrison, 235 U. S. 292 536
Christie *v.* United States, 237 U. S. 234 17
Clark *v.* Nash, 198 U. S. 361 155, 166
Clarke, *Ex parte*, 100 U. S. 399 255, 262
Clarksville Land Co. *v.* Harriman, 68 N. H. 374 630

PAGE

Clay County Co. *v.* Western Union Tel. Co., 44 I. C. C. 670 571, 573
Clement, Succession of, 146 La. 385 126, 127
Cleveland, C. C. & St. L. Ry. *v.* Backus, 154 U. S. 439 316
Coates *v.* District of Columbia, 42 App. D. C. 194 654
Cohen *v.* Samuels, 245 U. S. 50 397
Cohens *v.* Virginia, 6 Wheat. 264 281, 374
Cohn *v.* Malone, 248 U. S. 450 397
Coleman, *In re*, 136 Fed. Rep. 818 128
Columbus Ry., Power & Light Co. *v.* Columbus, 249 U. S. 399 630
Commonwealth *v.* Cleary, 172 Mass. 175 343
Commonwealth *v.* Louis. & Nash. R. R., 189 Ky. 309 563
Commonwealth *v.* Rubin, 165 Mass. 453 343
Commonwealth *v.* Wells, 110 Pa. St. 463 250
Conelly *v.* Nashville, 100 Tenn. 262 652
Conkling Min. Co. *v.* Silver King Coalition Mines Co., 230 Fed. Rep. 553 18
Cooper, *In re*, 143 U. S. 472 497
Cooper *v.* State, 49 Tex. Crim. Rep. 28 343
Corn Products Refg. Co. *v.* Eddy, 249 U. S. 427 226
Coy, *In re*, 127 U. S. 731 255
Crutcher *v.* Kentucky, 141 U. S. 47 647
Cudahy Packing Co. *v.* Frey & Son, Inc., 261 Fed. Rep. 65 209–211
Culpepper *v.* Ocheltree, 181 Cal. 788 483
Cuyahoga Power Co. *v.* Northern Realty Co., 244 U. S. 300 681
Dahn *v.* McAdoo, 256 Fed. Rep. 549 562
Dakota Cent. Tel. Co. *v.* South Dakota, 250 U. S. 163 664

PAGE
Dampskibs v. Hustis, 257 Fed. Rep. 862 563
Dane v. Jackson, 129 N. E. Rep. 606 589
Daniel Ball, The, 10 Wall. 557 120–122, 282
Darnell & Son Co. v. Memphis, 208 U. S. 113 348, 426, 427
Davidson v. New Orleans, 96 U. S. 97 598
Del., Lack. & W. R. R. v. United States, 249 U. S. 385 610, 614
Del., Lack. & W. R. R. v. Yurkonis, 238 U. S. 439 683
Del Monte Min. Co. v. Last Chance Min. Co., 171 U. S. 55 26
Detroit v. Blackeby, 21 Mich. 84 653
Dexter v. Norton, 47 N. Y. 62 630
Di Donato v. Phila. & Read. Ry., 266 Pa. St. 412 327
Dillon, *Ex parte*, 262 Fed. Rep. 563 368, 370
Di Tommaso v. Lehigh & N. E. R. R., 28 Pa. Dist. 473 561
District of Columbia v. Tyrrell, 11 App. D. C. 463 654
District of Columbia v. Woodbury, 136 U. S. 450 652, 654
Dr. Miles Medical Co. v. Park & Sons Co., 220 U. S. 373 209, 212
Dodge v. Woolsey, 18 How. 331 374
Doherty v. Northern Pac. Ry., 177 U. S. 421 60
Doyle v. Mitchell Bros. Co., 247 U. S. 179 390
Duffy v. Treasurer &c., 234 Mass. 42 601
Duhne v. New Jersey, 251 U. S. 311 497
Dunn, Matter of, 212 U. S. 374 356
Durham Realty Corp. v. La Fetra, 230 N. Y. 429 198
Eastern States Retail Lumber Dealers' Assn. v. United States, 234 U. S. 600 219
PAGE
Economy Lt. & Power Co. v. United States, 256 Fed. Rep. 792 115–118
Edgar A. Levy Co. v. Siegel Co., 230 N. Y. 634 198
Edwards v. Bodkin, 249 Fed. Rep. 562 481
Edwards v. Kearsey, 96 U. S. 595 129
Egan v. McDonald, 246 U. S. 227 487
Eisner v. Macomber, 252 U. S. 189 391
Eldorado Coal Co. v. Mager, 255 U. S. 522 682
Emerich Co. v. Siegel, Cooper & Co., 237 Ill. 610 630
Enterprise Irrig. Dist. v. Farmers Mutual Canal Co., 243 U. S. 157 226
Erie R. R. v. Caldwell, 264 Fed. Rep. 947 562
Erie R. R. v. Shuart, 250 U. S. 465 431
Erwin v. United States, 97 U. S. 392 656, 657
Escanaba Co. v. Chicago, 107 U. S. 678 121
Evansville Bank v. Britton, 105 U. S. 322 639–641
Everett v. Judson, 228 U S. 474 397
Exchange, Schooner, v. McFaddon, 7 Cr. 116 510
Farson, Son & Co. v. Bird, 248 U. S. 268 681
F. C. Latrobe, The, 28 Fed. Rep. 377 511
Fidelity, The, 16 Blatchf. 569 511
Fife & Co. v. Clarke, 3 McCord, 347 105
Filbin Corp. v. United States, 266 Fed. Rep. 911 549
Fillippon v. Albion Vein Slate Co., 250 U. S. 76 215
First Natl. Bank of Wellington v. Chapman, 173 U. S. 205 641
First Natl. Bank v. Union Trust Co., 244 U. S. 416 289
Fisk v. Henarie, 142 U. S. 459 419
Fitts v. McGhee, 172 U. S. 516 497

PAGE

Flagstaff Silver Min. Co. v. Tarbet, 98 U. S. 463 26
Flint v. Stone Tracy Co., 220 U. S. 107 392
Flynn v. Canton Co., 40 Md. 312 8
Flynn v. New York, S. & W. R. R., 90 N. J. L. 451 330
Ft. Smith & Western R. R. v. Mills, 253 U. S. 206 157
Ft. Worth v. National Park Bank, 261 Fed. Rep. 817 132
Foster v. Western Union Tel. Co., 205 Mo. App. 1 665
Fowler v. Dickson, 24 Del. 113 105
Frankel v. Satterfield, 9 Houst. 201 108
Frasch v. Moore, 211 U. S. 1 38
Frederick v. Fidelity Mutual Life Ins. Co., 75 Pa. Sup. Ct. Rep. 77 395, 396
Frederick v. Metropolitan Life Ins. Co., 239 Fed. Rep. 125 399
Freeman Elec. Co. v. Weber Elec. Co., 262 Fed. Rep. 768 668
French v. Barber Asphalt Co., 181 U. S. 324 660
Fritch, Inc. v. United States, 248 U. S. 458 40, 549
Furness, Withy & Co. v. Yang-Tsze Ins. Assn., 242 U. S. 430 681
Gaines v. Knecht, 212 U. S. 561 39
Galbraith v. Vallely, 261 Fed. Rep. 670 47, 48
Galveston, H. & S. A. Ry. v. Woodbury, 254 U. S. 357 567, 570, 572
Galveston, H. & S. A. Ry. v. Wurzbach, 219 S. W. Rep. 252 563
Garland, Heirs of, v. Choctaw Nation, 54 Ct. Clms. 55 439
Gast Realty Co. v. Schneider Granite Co., 240 U. S. 55 392, 660
Genesee Chief, The, v. Fitzhugh, 12 How. 443 120
Georgia v. Tennessee Copper Co., 206 U. S. 230 302

PAGE

Georgia, Fla. & Ala. Ry. v. Blish Milling Co., 241 U. S. 190 431
German Alliance Ins. Co. v. Lewis, 233 U. S. 389 155, 166
Gilman v. Philadelphia, 3 Wall. 713 121
Gilpin v. United States, 261 Fed. Rep. 841; 256 U. S. 10 2, 10, 11
Godchaux Co. v. Estopinal, 251 U. S. 179 126
Goodman v. Niblack, 102 U. S. 556 656, 657
Goodrich v. Edwards, 255 U. S. 527 682
Gouled v. United States, 255 U. S. 298 475
Governor of Georgia v. Madrazo, 1 Pet. 110 498
Graber v. Duluth, S. S. & A. Ry., 159 Wis. 414 330
Gracie v. Palmer, 8 Wheat. 605 561
Grand Trunk Western Ry. v. United States, 252 U. S. 112 580
Gritts v. Fisher, 224 U. S. 640 7
Guerini Stone Co. v. Carlin Constr. Co., 248 U. S. 334 215
Guttag v. Shatzkin, 230 N. Y. 647 198
Habana, The Paquete, 175 U. S. 677 9
Hager v. Swayne, 149 U. S. 242 656
Hagerman v. St. Louis & E. St. Louis Elec. Ry., 279 Mo. 616 315
Hagood v. Southern, 117 U. S. 52 500
Hairston v. Danville & Western Ry., 208 U. S. 598 154, 198
Haley v. Boston, 191 Mass. 291 652
Hallowell v. Commons, 239 U. S. 506 487
Hamilton v. Kentucky Distilleries Co., 251 U. S. 146 289
Hancock v. Muskogee, 250 U. S. 454 660
Hans v. Louisiana, 134 U. S. 1 497, 498
Harding, *Ex parte*, 219 U. S. 363 420

PAGE
Hastings & Dakota Ry., 19 L. D. 30 66
Hatcher & Snyder v. Atchison, T. & S. F. Ry., 258 Fed. Rep. 952 562
Haubert v. Balt. & Ohio R. R., 259 Fed. Rep. 361 562
Hawke v. Smith, 253 U. S. 221 250, 374
Hawkins v. Bleakly, 243 U. S. 210 120
Hays v. Gauley Mountain Coal Co., 247 U. S. 189 390
Hebe Co. v. Shaw, 248 U. S. 297 198
Heckman v. United States, 224 U. S. 413 204, 487
Heil v. United States, 273 Fed. Rep. 729 667
Heilbron's Estate, *In re*, 14 Wash. 536 128, 129
Heitmuller v. Stokes, 49 App. D. C. 391; 266 Fed. Rep. 1011 360
Henderson Bridge Co. v. Henderson City, 173 U. S. 592 598, 599
Henry Koerber, Jr., The, 268 Fed. Rep. 561 496
Hessey v. Northern Pac. Ry., 43 L. D. 302 69
Hewitt v. Schultz, 180 U. S. 139 60
Hines v. Dahn, 267 Fed. Rep. 105 562
Hines v. Smith, 270 Fed. Rep. 132 563
Hines v. Taylor, 79 Fla. 218 564
Hirsh v. Block, 50 App. D. C. 56; 267 Fed. Rep. 614 136
Hollerbach v. United States, 233 U. S. 165 17
Homestead Cases, 22 Gratt. 266 129
Hong Wing v. United States, 142 Fed. Rep. 128 401
Horlock v. Beal [1916] 1 A. C. 486 630
Houck v. Little River Drainage Dist., 239 U. S. 254 129, 130, 660
PAGE
Houston, E. & W. Texas Ry. v. United States, 234 U. S. 342 289
Houston Oil Co. v. Goodrich, 245 U. S. 440 681
Houston & Tex. Cent. R. R. v. Ennis, 252 U. S. 583 685
Howard Co. v. Baldwin Co., 48 App. D. C. 437 36
Hubbell v. United States, 179 U. S. 77 678
Hull v. Burr, 234 U. S. 712 683
Huse v. Glover, 119 U. S. 543 121
Indian Territory Oil Co. v. Oklahoma, 240 U. S. 522 536
International Harvester Co. v. Kentucky, 234 U. S. 222 157
International Paper Co. v. Massachusetts, 246 U. S. 135 392
Iowa v. Illinois, 147 U. S. 1 89
Jackson-Tweed Lumber Co. v. Southern Ry., 113 S. Car. 236 564
Jacobs v. Prichard, 223 U. S. 200 326
Jefferson v. Fink, 247 U. S. 288 323
Jensen v. Lehigh Valley R. R., 255 Fed. Rep. 795 563
J. Homer Fritch v. United States, 248 U. S. 458 40, 549
Jim Butler Tonopah Min. Co. v. West End Consol. Min. Co., 247 U. S. 450 26, 27
John McCraken, The, 145 Fed. Rep. 705 511
Johnson v. Fletcher, 54 Miss. 628 129
Johnson v. McAdoo, 257 Fed. Rep. 757 563
Johnson v. United States, 228 U. S. 457 475
Jolly v. Atchison, T. & S. F. Ry., 21 Cal. App. 368 544
Kansas City So. Ry. v. Carl, 227 U. S. 639 431
Kansas City So. Ry. v. Road Imp. Dist. No. 6, 139 Ark. 424 658, 660
Kansas City So. Ry. v. Rosier, 38 Okla. 231 539
Kansas City So. Ry. v. Tansey, 41 Okla. 543 539

PAGE

Kansas City So. Ry. *v.* Wallace, 38 Okla. 233 539
Kidd *v.* Pearson, 128 U. S. 1 257
King *v.* Amy & Silversmith Min. Co., 152 U. S. 222 26
King *v.* Cornell, 106 U. S. 395 9
Kirtland *v.* Hotchkiss, 100 U. S. 491 598
Klein *v.* New Orleans, 99 U. S. 149 511
Knickerbocker Ice Co. *v.* Stewart, 253 U. S. 149 502
Knowlton *v.* Moore, 178 U. S. 41 345, 348, 349, 392
Knoxville *v.* Knoxville Water Co., 212 U. S. 1 165
Knoxville Water Co. *v.* Knoxville, 200 U. S. 22 587
Kollock, *In re*, 165 U. S. 526 462
Krichman *v.* United States, 263 Fed. Rep. 538 363, 365
Kronprinzessin Cecilie, The, 244 U. S. 12 630
La Belle Iron Works *v.* United States, 55 Ct. Clms. 462 378
Lake Erie & Western R. R. *v.* State Public Util. Comm., 249 U. S. 422 546, 547
La Motte *v.* United States, 254 U. S. 570 204, 487
Lane *v.* Mickadiet, 241 U. S. 201 487
Lankford *v.* Platte Iron Works Co., 235 U. S. 461 500
LaRoque *v.* United States, 239 U. S. 62 481
Last Chance Min. Co. *v.* Tyler Min. Co., 157 U. S. 683 88
Latrobe, The F. C., 28 Fed. Rep. 377 511
Le Clair *v.* Montpelier & W. R. R. R., 93 Vt. 92 561
Ledgerwood *v.* Pitts, 122 Tenn. 570 250
Leep *v.* Railway Co., 58 Ark. 407 565
Lehigh Valley R. R. *v.* Pennsylvania, 145 U. S. 192 647
Lehnen *v.* Dickson, 148 U. S. 71 415

PAGE

Leloup *v.* Port of Mobile, 127 U. S. 640 647
Lessley *v.* Phipps, 49 Miss. 790 129
License Tax Cases, 5 Wall. 462 462
Lincoln Gas Co. *v.* Lincoln, 223 U. S. 349 514
Lincoln Gas Co. *v.* Lincoln, 250 U. S. 256 512, 513, 518
Lincoln Gas Co. *v.* Lincoln, 253 U. S. 477 513
Lisner *v.* District of Columbia, 49 App. D. C. 276; 263 Fed. Rep. 1020 583
Logan *v.* Davis, 233 U. S. 613 481
Lomax *v.* Pickering, 173 U. S. 26 522
Lone Wolf *v.* Hitchcock, 187 U. S. 557 8
Long *v.* The Tampico, 16 Fed. Rep. 491 511
Looney *v.* Crane Co., 245 U. S. 178 392
Lord *v.* Veazie, 8 How. 251 362
Louisiana *v.* Jumel, 107 U. S. 711 500
Louis. & Nash. R. R. *v.* Barber Asphalt Co., 197 U. S. 430 539, 660
Louis. & Nash. R. R. *v.* Motley, 219 U. S. 467 198
Louis. & Nash. R. R. *v.* Western Union Tel. Co., 237 U. S. 300 683
Louisville Trust Co. *v.* Comingor, 184 U. S. 18 47–50
Louisville Underwriters, *In re*, 134 U. S. 488 499
Love *v.* Atlanta, 95 Ga. 129 652
Luria *v.* United States, 231 U. S. 9 373
Lykins *v.* McGrath, 184 U. S. 169 522
McClenachan *v.* McCarty, 1 Dall. 375 105
McClure *v.* Norfolk & W. Ry., 83 W. Va. 473 544
McCracken *v.* Hayward, 2 How. 608 129
McCraken, John, The, 145 Fed. Rep. 705 511

PAGE

McCulloch *v.* Maryland, 4 Wheat. 316 280, 281, 287, 288, 374, 376, 598
McDermott *v.* Severe, 202 U. S. 600 215
McDermott *v.* Wisconsin, 228 U. S. 115 45
McGrath *v.* Northern Pac. Ry., 177 N. W. Rep. 383 563
McGrew Coal Co. *v.* Missouri Pac. Ry., 280 Mo. 466 134
McHenry *v.* Alford, 168 U. S. 651 373
McLaren *v.* Fleischer, 253 U. S. 479 480
McLaren *v.* Fleischer, 256 U. S. 477 483
McLaren *v.* Fleischer, 181 Calif. 607 478, 480
McLaughlin Bros. *v.* Hallowell, 228 U. S. 278 420
McNulta *v.* Lochridge, 141 U. S. 327 561
Mackey *v.* Choctaw, Okla. & Gulf R. R., 261 Fed. Rep. 342 531, 535
Madrazo, *Ex parte*, 7 Pet. 627 498
Magaha *v.* Hagerstown, 95 Md. 62 8
Mail Divisor Cases, 251 U. S. 326 610, 614
Manigault *v.* Springs, 199 U. S. 473 198
Marcus Brown Holding Co. *v.* Feldman, 256 U. S. 170 159
Marcus Brown Holding Co. *v.* Feldman, 269 Fed. Rep. 306 171, 172
Mardis *v.* Hines, 258 Fed. Rep. 945; 267 *id.* 171 562
Maricopa & Phœnix R. R. *v.* Arizona, 156 U. S. 347 538
Mark Owen & Co. *v.* Michigan Cent. R. R., 291 Ill. 149 428
Marquette Hotel Co. *v.* State Tax Comm., 282 Mo. 213 231
Martin *v.* District of Columbia, 205 U. S. 135 156
Martin *v.* Hunter's Lessee, 1 Wheat. 304 249, 374, 376
Maryland *v.* Miller, 194 Fed. Rep. 775 8

PAGE

Maxwell *v.* Bugbee, 250 U. S. 525 113
Memphis Gas Light Co. *v.* Shelby County, 109 U. S. 398 598, 599
Mercantile Bank *v.* New York, 121 U. S. 138 640, 641
Merchants' L. & T. Co. *v.* Smietanka, 255 U. S. 509 682
Merchants' & Manufacturers' Bank *v.* Pennsylvania, 167 U. S. 461 598
Messenger *v.* Anderson, 225 U. S. 436 10
Miles Medical Co. *v.* Park & Sons Co., 220 U. S. 373 209, 212
Miller & Lux *v.* Sacramento & San Joaquin Drainage Dist., 182 Calif. 252 129, 130
Milligan, *Ex parte*, 4 Wall. 2 165
Mills *v.* Green, 159 U. S. 651 362
Missouri *v.* Chicago, Burl. & Q. R. R., 241 U. S. 533 518
Missouri *v.* Illinois, 180 U. S. 208 302
Missouri *v.* Illinois, 200 U. S. 496 309
Missouri, Kans. & Tex. Ry. *v.* Tulsa, 45 Okla. 382 539
Missouri, Kans. & Tex. Ry. *v.* United States, 53 Ct. Clms. 641 611
Missouri, Kans. & Tex. Ry. *v.* Ward, 244 U. S. 383 431
Missouri, Kans. & Tex. Ry. *v.* Zuber, 255 U. S. 561 681
Missouri Pac. R. R. *v.* Ault, 256 U. S. 554 565, 566, 662, 664, 665
Missouri Pac. R. R. *v.* Ault, 140 Ark. 572 555, 556
Missouri Pac. Ry. *v.* Fitzgerald, 160 U. S. 556 419, 420
Missouri Pac. Ry. *v.* McGrew Coal Co., 244 U. S. 191 134, 135
Mitchell *v.* Cumberland Tel. Co., 188 Ky. 263 665
Mobile & Ohio R. R. *v.* Jobe, 122 Miss. 696 563
Moffitt *v.* Kelly, 218 U. S. 400 226

PAGE
Moites v. The South Carolina, Bee, 422 510
Montello, The, 20 Wall. 430 121–123
Moore, *In re*, 209 U. S. 490 420
Morgan v. Ownbey, 29 Del. 379 100
Mt. Vernon-Woodberry Co. v. Alabama Interstate Power Co., 240 U. S. 30 155
Mueller v. Nugent, 184 U. S. 1 398
Muir, *Ex parte*, 254 U. S. 522 504, 510, 619, 629
Muir v. Louis. & Nash. R. R., 247 Fed. Rep. 888 561
Munn v. Illinois, 94 U. S. 113 157
Murray's Lessee v. Hoboken Land & Imp. Co., 18 How. 272 109
Murray v. Wilson Distilling Co., 213 U. S. 151 500
Myles Salt Co. v. Iberia Drainage Dist., 239 U. S. 478 131
Nash v. Southern Pac. Co., 260 Fed. Rep. 280 562
National Bank of Wilmington, etc. v. Furtick, 2 Marvel, 35 108
National Foundry & Pipe Works v. Oconto Water Supply Co., 183 U. S. 216 88
National Prohibition Cases, 253 U. S. 350 370
Nelson v. Northern Pac. Ry., 188 U. S. 108 59
New Jersey Nav. Co. v. Merchants' Bank, 6 How. 344 570
New York City v. Consolidated Gas Co., 253 U. S. 219 684
New York, *Ex parte*, No. 1, 256 U. S. 490 509, 510
New York v. New Jersey, 249 U. S. 202 297
New York Cent. R. R. v. Winfield, 244 U. S. 147 334
New York Cent. &c. R. R. v. York & Whitney Co., 230 Mass. 206 406
New York Mutual Life Ins. Co. v. Armstrong, 117 U. S. 591 128
New York Trust Co. v. Eisner, 256 U. S. 345 632, 635
New York Trust Co. v. Eisner, 263 Fed. Rep. 620 345
Nickel v. State, 179 Calif. 126 225
Nickel v. State, 43 Nev. 12 223
Nickoll & Knight v. Ashton, Edridge & Co. [1901] 2 K. B. 126 627
Noble State Bank v. Haskell, 219 U. S. 104 155
Norfolk-Southern R. R. v. Owens, 251 U. S. 550 566
Norris v. Jackson, 9 Wall. 125 415
North Carolina v. Temple, 134 U. S. 22 497
Northern Pac. Ry. v. American Trading Co., 195 U. S. 439 629
Northern Pac. Ry. v. North Dakota, 250 U. S. 135 365, 557
Northern Pac. Ry. v. Townsend, 190 U. S. 267 536
Northern Pac. Ry. v. Washington, 222 U. S. 370 334
Northern Securities Co. v. United States, 193 U. S. 197 201
Oetjen v. Central Leather Co., 246 U. S. 297 629
Ogden v. Saunders, 12 Wheat. 213 128
Ohio R. R. Comm. v. Worthington, 225 U. S. 101 282
Ohio Tax Cases, 232 U. S. 576 647
Oklahoma v. Texas, 253 U. S. 470, 471 84, 610
Oklahoma v. Texas, 256 U. S. 70 608
Oklahoma Ry. v. Severns Paving Co., 251 U. S. 104 538, 539
Osborn v. Bank, 9 Wheat. 738 356, 500
Osborne v. Gray, 241 U. S. 16 135, 335
Owens v. Hines, 178 N. Car. 325 565, 566
Ownbey v. Morgan, 29 Del. 417; 30 Del. 297 94, 101, 107
Pacific Live Stock Co. v. Lewis, 241 U. S. 440 420
Pacific Railroad Removal Cases, 115 U. S. 1 356

PAGE
Palmer v. Ohio, 248 U. S. 32 497
Paper-Bag Cases, 105 U. S. 766 362
Park Square Automobile Station, *Ex parte*, 244 U. S. 412 420
Park & Tilford, *Ex parte*, 245 U. S. 82 420
Parker v. Riley, 250 U. S. 66 203
Parlement Belge, The [1880], L. R. 5 Prob. Div. 197 510
Paul v. Virginia, 8 Wall. 168 424
Payne v. Central Pac. Ry., 255 U. S. 228 64
Peacock v. Detroit, G. H. & M. Ry., 208 Mich. 403 563
Pedersen v. Del., Lack. & W. R. R., 229 U. S. 146 327, 329–331
Penn Mutual Life Ins. Co. v. Lederer, 252 U. S. 523 553
Pennoyer v. McConnaughy, 140 U. S. 1 500
Pennoyer v. Neff, 95 U. S. 714 109
Pennsylvania Co., *In re*, 137 U. S. 451 418, 419
People v. Cavanaugh, 112 Calif. 674 250
People v. Economy Power Co., 234 U. S. 497 123
People v. Economy Power Co., 241 Ill. 290 123
People *ex rel.* Durham Realty Corp. v. La Fetra, 230 N. Y. 429 198
Perley v. North Carolina, 249 U. S. 510 156, 167
Perlman v. United States, 247 U. S. 7 475
Permoli v. First Municipality, 3 How. 589 120
Pesaro, The, 255 U. S. 216 373, 629
Peterson, *Ex parte*, 253 U. S. 300 503
Pettibone v. United States, 148 U. S. 197 217, 529
Phila. & Read. Ry. v. Di Donato, 256 U. S. 327 332, 334
Pickering v. Lomax, 145 U. S. 310 522
Piedmont Power Co. v. Graham, 253 U. S. 193 587

PAGE
Pittsburgh, C. C. & St. L. Ry. v. Fink, 250 U. S. 577 406, 408
Planters' Bank v. Sharp, 6 How. 301 128
Plymouth Coal Co. v. Pennsylvania, 232 U. S. 531 156, 167
Poindexter v. Greenhow, 114 U. S. 270 648
Polk v. Phila. & Read. Ry., 266 Pa. St. 335 332
Pollard's Lessee v. Hagan, 3 How. 212 121
Pollock v. Farmers' L. & T. Co., 157 U. S. 429 292
Pollock v. Farmers' L. & T. Co., 158 U. S. 601 648
Postal Tel. Cable Co. v. Charleston, 153 U. S. 692 647
Postal Tel.-Cable Co. v. Warren-Godwin Co., 251 U. S. 27 571
Poston v. Western Union Tel. Co., 107 S. E. Rep. 516 662, 663
Powers v. Ches. & Ohio Ry., 169 U. S. 92 419
Prentis v. Atlantic Coast Line, 211 U. S. 210 154
Price v. Forrest, 173 U. S. 410 656, 657
Primrose v. Western Union Tel. Co., 154 U. S. 1 569, 570, 574
Privett v. United States, 261 Fed. Rep. 351 201, 202
Producers Transp. Co. v. Railroad Comm., 251 U. S. 228 154, 198
Protector, The, 20 Fed. Rep. 207 511
Providence Bank v. Billings, 4 Pet. 514 598, 599
Pullman Co. v. Sweeney, 269 Fed. Rep. 764 563
Railroad Co. v. Peniston, 18 Wall. 5 537
Railroad Co. v. Tennessee, 101 U. S. 337 497
Randolph v. Scruggs, 190 U. S. 533 49
Rankin v. Buckman, 9 Or. 253 8

PAGE

Rathman, *In re*, 183 Fed. Rep. 913 49
Ratterman *v.* Western Union Tel. Co., 127 U. S. 411 646
Reed *v.* Thurmond, 269 Fed. Rep. 252 462
Reybold *v.* Parker, 6 Houst. 544 105
Reynolds *v.* Howell, 1 Marvel, 52 105
Ricaud *v.* American Metal Co., 246 U. S. 304 629
Rice *v.* Smith, 72 Miss. 42 128, 129
Richmond *v.* Merchants' Natl. Bank, 124 Va. 522 636
Riddle, *Ex parte*, 255 U. S. 450 133
Ringquist *v.* Duluth, M. & N. Ry., 145 Minn. 147 563
Rio Grande Western Ry. *v.* Stringham, 239 U. S. 44 538
Robinson *v.* Central of Georgia Ry., 150 Ga. 41 563
Robinson *v.* Davison [1871], L. R. 6 Exch. 269 630
Robinson & Co. *v.* Belt, 187 U. S. 41 215
Roe, *Ex parte*, 234 U. S. 70 420
Roth *v.* District of Columbia, 16 App. D. C. 323 654
Rousseau *v.* Brown, 21 App. D. C. 73 39
Rowe *v.* United States, 164 U. S. 546 343
Royster Guano Co. *v.* Virginia, 253 U. S. 412 661
Ruppert *v.* Caffey, 251 U. S. 264 289
Russell *v.* Place, 94 U. S. 606 88
Rutherford *v.* Union Pac. R. R., 254 Fed. Rep. 880 562
St. Anthony Church *v.* Pennsylvania R. R., 237 U. S. 575 683
St. Louis *v.* Western Union Tel. Co., 166 U. S. 388 415
St. Louis & East St. Louis Elec. Ry. *v.* Hagerman, 256 U. S. 314 231
St. Louis, I. Mt. & So. Ry. *v.* Starbird, 243 U. S. 592 431

PAGE

St. Louis Poster Adv. Co. *v.* St. Louis, 249 U. S. 269 156, 167
St. Louis Southwestern Ry. *v.* Arkansas, 235 U. S. 350 231, 316, 318, 647
St. Paul & Duluth R. R. *v.* United States, 112 U. S. 733 656
St. Paul & Pac. R. R. *v.* Northern Pac. R. R., 139 U. S. 1 65
Saks & Co. *v.* District of Columbia, 49 App. D. C. 276; 263 Fed. Rep. 1020 583
Sands *v.* Manistee River Imp. Co., 123 U. S. 288 121
Savage *v.* Jones, 225 U. S. 501 45
Scioto Oil Co. *v.* O'Hern, 169 Pac. Rep. 483 523
Seaboard Air Line Ry. *v.* United States, 53 Ct. Clms. 107 655
Second Employers' Liability Cases, 223 U. S. 1 289, 334
Selective Draft Law Cases, 245 U. S. 366 289
Seneca, The, Fed. Cas. No. 12668 511
Shepard *v.* Carrigan, 116 U. S. 593 678
Shipton, Anderson & Co., *In re* [1915] 3 K. B. 676 630
Shoemaker *v.* United States, 147 U. S. 282 154
Siebert *v.* Erie R. R., 163 N. Y. S. 111 544
Siebold, *Ex parte*, 100 U. S. 371 248, 255, 262, 283
Silver King Coalition Mines Co. *v.* Conkling Min. Co., 255 U. S. 151 18
Silverthorne Lumber Co. *v.* United States, 251 U. S. 385 475
Simons, *Ex parte*, 247 U. S. 231 503
Singer Sewing Mach. Co. *v.* Brickell, 233 U. S. 304 426
Sinking-Fund Cases, 99 U. S. 700 64, 67
Sioux City & St. Paul R. R. *v.* United States, 159 U. S. 349 68

PAGE
Sizemore *v.* Brady, 235 U. S. 441 1, 8
Skinner *v.* Holt, 9 S. Dak. 427 128, 129
Smith *v.* Kansas City Title Co., 255 U. S. 180 290, 357
Smith *v.* Reeves, 178 U. S. 436 500, 501
Smith *v.* United States, 54 Ct. Clms. 119 12
South Carolina *v.* United States, 199 U. S. 437 373
Southern Pac. Co. *v.* Industrial Accident Comm., 174 Calif. 8 330, 331
Southern Pac. Co. *v.* Jensen, 244 U. S. 205 502, 654
Southern Pac. Co. *v.* Lowe, 247 U. S. 330 390
Southern Pac. R. R. *v.* Bell, 183 U. S. 675 66
Southern Pac. R. R. *v.* United States, 168 U. S. 1 67, 85
Southern Pac. R. R. *v.* United States, 183 U. S. 519 52, 68
Southern Pac. Term. Co. *v.* Interstate Com. Comm., 219 U. S. 498 282
Southern Ry. *v.* Greene, 216 U. S. 400 157, 392, 424
Southern Ry. *v.* Prescott, 240 U. S. 632 431
Southern Ry. *v.* Puckett, 244 U. S. 571 330
Southern Ry. *v.* United States, 222 U. S. 20 334
Spalding *v.* Rosa, 71 N. Y. 40 630
Special Rules of Practice During Federal Control, 50 I. C. C. 797 561
Spofford *v.* Kirk, 97 U. S. 484 656
Spring *v.* American Tel. Co., 86 W. Va. 192 665
Standard Combed Thread Co. *v.* Penna. R. R., 88 N. J. L. 257 544
Standard Tank Car Co. *v.* Sullivan, 282 Mo. 261 230
State *v.* Erickson, 119 Minn. 152 250
State *ex rel.* Whipple *v.* Martinson, 144 Minn. 206 42, 44
State *ex rel.* Hagerman *v.* St. Louis & E. St. Louis Elec. Ry., 279 Mo. 616 315
State *ex rel.* Marquette Hotel Co. *v.* State Tax Comm., 282 Mo. 213 231
State *ex rel.* Standard Tank Car Co. *v.* Sullivan, 282 Mo. 261 230
State *v.* Taylor, 220 Mo. 618 250
State *v.* Whipple, 143 Minn. 403 44
State *v.* Woodruff, 68 N. J. L. 89 250
State Tax on Foreign-Held Bonds, 15 Wall. 300 598, 599
Stephens *v.* Cherokee Nation, 174 U. S. 445 8
Strickley *v.* Highland Boy Gold Min. Co., 200 U. S. 527 155, 166
Sturges *v.* Crowninshield, 4 Wheat. 122 126, 128
Sunday Lake Iron Co. *v.* Wakefield, 247 U. S. 350 230
Supervisors *v.* United States, 4 Wall. 435 8
Sutton *v.* United States, 55 Ct. Clms. 193 576, 578
Swift & Co. *v.* Hocking Valley Ry., 243 U. S. 281 546, 547
Swigart *v.* Baker, 229 U. S. 187 326
Talley *v.* Burgess, 246 U. S. 104 487
Taylor *v.* Caldwell, 2 Best & Smith, 826 630
Texas Co. *v.* Hogarth Shipping Corp., 265 Fed. Rep. 375; 267 *id.* 1023; 254 U. S. 625 620, 626
Texas & New Orleans R. R. *v.* Sabine Tram Co., 227 U. S. 111 282
Tex. & Pac. Ry. *v.* Cody, 166 U. S. 606 357
Tex. & Pac. Ry. *v.* Reiss, 183 U. S. 621 431, 434
Thayer *v.* Boston, 19 Pick. 511 653
Thomas *v.* Gay, 169 U. S. 264 537
Thomsen *v.* Cayser, 243 U. S. 66 208, 210, 212, 219

PAGE
Tiernans v. Schley, 2 Leigh, 25 105
Tiger v. Western Investment Co., 221 U. S. 286 487
Tornado, The, 108 U. S. 342 630
Trade-Mark Cases, 100 U. S. 82 648
Travellers' Ins. Co. v. Connecticut, 185 U. S. 364 598, 599
Underhill v. Hernandez, 168 U. S. 250 629
Union Dry Goods Co. v. Georgia Pub. Serv. Corp., 248 U. S. 372 198
Union Fish Co. v. Erickson, 248 U. S. 308 502
Union Pac. R. R. v. Burke, 255 U. S. 317 567, 574
United States v. Atlantic Dredging Co., 253 U. S. 1 17
United States v. Babbit, 1 Black, 55 373
United States v. Bowling, 261 Fed. Rep. 657 484, 485
United States v. Bright, 24 Fed. Cas. 1232 498
United States v. Cerecedo Hermanos, 209 U. S. 337 326
United States v. Chase, 245 U. S. 89 1, 7
United States v. Colgate & Co., 250 U. S. 300 210–212, 218, 461
United States v. Colton Marble & Lime Co., 146 U. S. 615 66
United States v. Cornell Steamboat Co., 137 Fed. Rep. 455 8
United States v. Del. & Hudson Co., 213 U. S. 366 559
United States v. Doremus, 249 U. S. 86 45, 462
United States v. Farhat, 269 Fed. Rep. 33 462
United States v. Ferger, 250 U. S. 199 289
United States v. Field, 255 U. S. 257 348
United States v. Gillis, 95 U. S. 407 656
United States v. Gradwell, 243 U. S. 476 248, 278
United States v. Gue Lim, 176 U. S. 459 400
United States v. Hamburg-American Co., 239 U. S. 466 362
United States v. Hammers, 221 U. S. 220 481
United States v. Hartwell, 6 Wall. 385 365
United States v. Hutto, 256 U. S. 524 530
United States v. Jin Fuey Moy, 241 U. S. 394 462
United States v. Keitel, 211 U. S. 370 461
United States v. Krichman, 256 Fed. Rep. 974 364
United States v. McGrane, 270 Fed. Rep. 761 549
United States v. Maurice, 26 Fed. Cas. No. 15747 365
United States v. Missouri, Kans. & Tex. Ry., 141 U. S. 358 66
United States v. Mosley, 238 U. S. 383 255, 262
United States v. North American Transp. Co., 253 U. S. 330 581
United States v. Northern Pac. R. R., 177 U. S. 435 60
United States v. Northern Pac. R. R., 193 U. S. 1 60, 68
United States v. Northern Pac. R. R., 95 Fed. Rep. 864 60
United States v. Northern Pac. Ry., 264 Fed. Rep. 898 52, 58
United States v. Pacific Railroad, 120 U. S. 227 580
United States v. Puhac, 268 Fed. Rep. 392 462
United States v. Rabinowich, 238 U. S. 78 529
United States v. Reese, 92 U. S. 214 648
United States v. Rickert, 188 U. S. 432 487
United States v. Sandoval, 231 U. S. 28 121
United States v. Schrader's Son, Inc., 252 U. S. 85 209, 210, 212, 216, 218

PAGE
United States v. Sohm, 265 Fed. Rep. 910 462
United States v. Spearin, 248 U. S. 132 17
United States v. Stafoff, 268 Fed. Rep. 417 462
United States v. Stevenson, 215 U. S. 190 461, 529
United States v. Strang, 254 U. S. 491 366
United States v. Texas, 143 U. S. 621 86
United States v. Texas, 162 U. S. 1 70, 83-87, 91, 92, 608
United States v. Turner, 266 Fed. Rep. 248 462
United States v. Tynen, 11 Wall. 88 9, 463
United States v. Union Stock Yard Co., 226 U. S. 286 282
United States v. U. S. Fidelity & Guaranty Co., 236 U. S. 512 215
United States v. Windham, 264 Fed. Rep. 376 462
United States v. Yuginni, 266 Fed. Rep. 746 450, 458
Vallely v. Galbraith, 253 Fed. Rep. 390 48
Van Brocklin v. Tennessee, 117 U. S. 151 120
Vicksburg, S. & P. Ry. v. Anderson-Tully Co., 261 Fed. Rep. 741 409
Vogle v. New Granada Canal Co., 1 Houst. 294 106
Voorhees v. Bank of United States, 10 Pet. 449 105
Wagner v. Baltimore, 239 U. S. 207 598, 599
Wainwright v. Penna. R. R., 253 Fed. Rep. 459 561
Wall v. Ches. & Ohio Ry., 290 Ill. 227 125, 126
Wallace v. Adams, 204 U. S. 415 8
Walrath v. Champion Min. Co., 171 U. S. 293 26
Walsh v. Brewster, 255 U. S. 536 682
Watson v. Noblett, 65 N. J. L. 506 105

PAGE
Webb, *Ex parte*, 225 U. S. 663 121, 523
Webber v. Virginia, 103 U. S. 344 426
Webster v. Luther, 163 U. S. 331 481
Weeks v. United States, 232 U. S. 383 475
Weightman v. Washington, 1 Black, 39 652
Welch v. Swasey, 214 U. S. 91 156, 167
Wells v. Calnan, 107 Mass. 514 630
Wells v. Fisher, 47 L. D. 288 481
Wells v. Shreve's Admr., 2 Houst. 329 108
Welton v. Missouri, 91 U. S. 275 348, 426
Westbrook v. Director General, 263 Fed. Rep. 211 562
Western Union Tel. Co. v. Alabama, 132 U. S. 472 647
Western Union Tel. Co. v. Conditt, 223 S. W. Rep. 234 665
Western Union Tel. Co. v. Davis, 142 Ark. 304 665
Western Union Tel. Co. v. Esteve Bros. & Co., 254 U. S. 624 569
Western Union Tel. Co. v. Esteve Bros. & Co., 268 Fed. Rep. 22 567, 569
Western Union Tel. Co. v. Glover, 17 Ala. App. 374 665
Western Union Tel. Co. v. Kansas, 216 U. S. 1 647
Western Union Tel. Co. v. Massachusetts, 125 U. S. 530 537
Western Union Tel. Co. v. Poston, 253 U. S. 480 663
Western Union Tel. Co. v. Robinson, 225 S. W. Rep. 877 665
Weyerhaeuser v. Hoyt, 219 U. S. 380 60, 64, 67
Whipple v. Martinson, 144 Minn. 206 42, 44
Willamette Bridge Co. v. Hatch, 125 U. S. 1 121

PAGE

Williams *v.* Gibbes, 20 How. 535 581
Williams *v.* Talladega, 226 U. S. 404 647
Willson *v.* Black-bird Creek Marsh Co., 2 Pet. 245 121
Wilson *v.* New, 243 U. S. 332 157, 289
Wisconsin Cent. R. R. *v.* United States, 164 U. S. 190 580
Wisner, *Ex parte*, 203 U. S. 449 420
Witherspoon & Sons *v.* Postal Tel. & Cable Co., 257 Fed. Rep. 758 665
Withnell *v.* Ruecking Constr. Co., 249 U. S. 63 660
Woodward *v.* United States, 56 Ct. Clms. 133 632, 634
Workman *v.* New York City, 179 U. S. 552 491, 499, 502, 654
Yarbrough, *Ex parte*, 110 U. S. 651 255, 262, 290, 373
Yazoo & Miss. Valley R. R. *v.* Nichols & Co., 120 Miss. 690; 251 U. S. 550 540, 544
Yee Won *v.* White, 258 Fed. Rep. 792 399, 400

TABLE OF STATUTES

CITED IN OPINIONS.

(A.) Statutes of the United States.

PAGE

1789, Aug. 7, c. 8, 1 Stat. 50 119
1789, Sept. 24, c. 20, 1 Stat. 79 (see Judiciary Act).
1796, Apr. 18, c. 13, 1 Stat. 452 527
1796, May 18, c. 29, 1 Stat. 464, § 9 119
1800, May 7, c. 41, 2 Stat. 58, § 2 119
1804, Mar. 26, c. 35, 2 Stat. 277, § 6 119
1806, Apr. 21, c. 48, 2 Stat. 402 527
1809, Feb. 3, c. 13, 2 Stat. 514, § 2 119
1811, Mar. 2, c. 30, 2 Stat. 652 527
1818, Apr. 18, c. 67, 3 Stat. 428, § 4 119
1818, Dec. 3, Joint Resolution, 3 Stat. 536 120
1834, June 30, c. 162, 4 Stat. 735, § 14 527
1845, Mar. 1, Joint Resolution, 5 Stat. 797 82
1845, Dec. 29, Joint Resolution, 9 Stat. 108 82
1846, July 29, c. 66, 9 Stat. 41 655
1853, Feb. 26, c. 81, 10 Stat. 170 655
1861, Mar. 2, Joint Resolution, 12 Stat. 251 372
1864, June 3, c. 106, 13 Stat. 99, § 41 638
1864, July 2, c. 217, 13 Stat. 365 ..... 51, 58
§ 3 68
§ 6 ..... 52, 64
1866, July 25, c. 245, 14 Stat. 243 262

PAGE

1866, July 27, c. 278, 14 Stat. 295, § 5 207
1868, Feb. 10, c. 7, 15 Stat. 34 639
1870, May 31, c. 114, 16 Stat. 140 ..... 262, 282
§ 20 282
1870, May 31, Joint Resolution, 16 Stat. 378 ..... 51, 58
1870, July 14, c. 254, 16 Stat. 254 262
1871, Feb. 28, c. 99, 16 Stat. 433, §§ 1–4 282
1872, June 10, c. 415, 17 Stat. 347 262
1875, Mar. 3, c. 137, 18 Stat. 470, § 1 499
1880, May 14, c. 89, 21 Stat. 140 ..... 477, 479
1882, May 6, c. 126, 22 Stat. 58 401
1882, Aug. 7, c. 434, 22 Stat. 341 ..... 1, 5, 11
§ 8 ..... 5, 7
1884, July 5, c. 220, 23 Stat. 115, § 6 400
1887, Feb. 4, c. 104, 24 Stat. 379 (see Interstate Commerce Acts).
1887, Mar. 3, c. 359, 24 Stat. 505 667
1887, Mar. 3, c. 373, 24 Stat. 552 418
1887, Mar. 3, c. 376, 24 Stat. 556 ..... 52, 62
1888, Feb. 18, c. 13, 25 Stat. 35, § 2 535
1888, June 29, c. 503, 25 Stat. 239 441
1888, Aug. 13, c. 866, 25 Stat. 433 418

PAGE
1888, Sept. 13, c. 1015, 25 Stat. 476 401
1889, Feb. 13, c. 152, 25 Stat. 668 536
1889, Mar. 2, c. 382, 25 Stat. 862 (see Interstate Commerce Acts).
1889, Mar. 2, c. 422, 25 Stat. 1013 485
1890, May 2, c. 182, 26 Stat. 81 ..... 82, 323
§§ 25, 29 82
1890, July 2, c. 647, 26 Stat. 209 (Sherman Act) 209, 211
§ 7 211
1890, Sept. 19, c. 907, 26 Stat. 426, § 7 116
1890, Oct. 1, c. 1252, 26 Stat. 640 536
1891, Feb. 21, c. 249, 26 Stat. 765 536
1892, May 5, c. 60, 27 Stat. 25 401
1893, Mar. 3, c. 209, 27 Stat. 630 ..... 1, 5, 11
1893, Nov. 3, c. 14, 28 Stat. 7 401
1894, Jan. 22, c. 14, 28 Stat. 27 536
1894, Aug. 24, c. 330, 28 Stat. 502 ..... 536, 537
§ 5 537
1896, Apr. 24, c. 122, 29 Stat. 98 ..... 536, 537
1898, June 13, c. 448, 30 Stat. 448 449
1898, July 1, c. 541, 30 Stat. 544 (see Bankruptcy Act).
1899, Feb. 14, c. 154, 30 Stat. 836 255
1899, Mar. 3, c. 425, 30 Stat. 1121, § 9 ..... 114, 115
1900, Mar. 28, c. 111, 31 Stat. 52 ..... 536, 537
1901, Mar. 1, c. 676, 31 Stat. 861, § 10 535
1902, Apr. 29, c. 641, 32 Stat. 176 401
1902, June 17, c. 1093, 32 Stat. 388, § 3 478
1904, Apr. 27, c. 1630, 33 Stat. 428, § 5 401
1904, Apr. 28, c. 1824, 33 Stat. 573 323

PAGE
1905, Feb. 20, c. 592, 33 Stat. 728 ..... 35, 37
§ 9 ..... 35, 38
§ 13 37
1905, Mar. 3, c. 1484, 33 Stat. 1257, § 4 581
1906, Feb. 27, c. 510, 34 Stat. 48, § 3 581
1906, June 16, c. 3335, 34 Stat. 267 ..... 83, 520, 523
§ 1 523
§ 21 523
1906, June 29, c. 3591, 34 Stat. 584 (see Interstate Commerce Acts).
1906, June 30, c. 3914, 34 Stat. 697, § 9 ..... 576, 579
1907, Mar. 1, c. 2285, 34 Stat. 1015 ..... 519, 522
1907, Mar. 2, c. 2564, 34 Stat. 1246 (see Criminal Appeals Act).
1908, May 27, c. 199, 35 Stat. 312 ..... 201, 202, 519, 520
§ 2 ..... 519, 520
§ 9 ..... 201, 202, 519, 522
1908, May 29, c. 216, 35 Stat. 444, § 5 ..... 439, 440
1909, Mar. 4, c. 321, 35 Stat. 1088 (see Criminal Code).
1910, June 18, c. 309, 36 Stat. 539 (see Interstate Commerce Acts).
§ 7 ..... 566, 570
1910, June 25, c. 382, 36 Stat. 630 578
1910, June 25, c. 392, 36 Stat. 822 ..... 232, 234, 243, 259, 276
§ 8 ..... 232, 243, 259
§ 10 276
1910, June 25, c. 431, 36 Stat. 855 ..... 319, 320, 484, 487
§ 1 ..... 322, 484, 487
§ 2 ..... 319, 323
1911, Feb. 27, c. 166, 36 Stat. 933 578
1911, Mar. 3, c. 231, 36 Stat. 1087 (see Judicial Code).
1911, Aug. 19, c. 33, 37 Stat. 25 ..... 232, 234, 243, 259, 276
§ 11 276

PAGE

1912, May 11, c. 121, 37 Stat. 111 ..... 1, 6, 11
§ 2 9
1912, July 25, c. 253, 37 Stat. 201 ..... 576, 577
§ 8 ..... 576, 578
1912, Aug. 24, c. 389, 37 Stat. 539, § 4 ..... 610, 613
1913, Feb. 14, c. 55, 37 Stat. 678 ..... 319, 320
1913, Mar. 4, c. 144, 37 Stat. 801 577
1913, May 31, Proclamation, 38 Stat. 2049 ..... 265, 276
1913, Oct. 3, c. 16, 38 Stat. 114, pars. 5, 387 ..... 402, 403
1913, Oct. 22, c. 32, 38 Stat. 219 ..... 409, 413
1913, Dec. 23, c. 6, 38 Stat. 263, § 13 ..... 350, 355
1914, June 4, c. 103, 38 Stat. 384 ..... 233, 253, 260
§ 1 253
§ 2 ..... 233, 254
§ 3 254
1914, Aug. 1, c. 222, 38 Stat. 582 ..... 484, 488
1914, Aug. 22, c. 267, 38 Stat. 703 403
1914, Oct. 2, c. 313, 38 Stat. 725 579
1914, Oct. 15, c. 323, 38 Stat. 730 (Clayton Act) 211
§§ 2, 4 211
1914, Oct. 22, c. 331, 38 Stat. 745 ..... 446, 447
Schedule B 447
§ 5 447
§§ 17–19 448
§ 20 448
§ 24 447
1914, Dec. 17, c. 1, 38 Stat. 785 ..... 42, 45
1915, Jan. 28, c. 22, 38 Stat. 803, § 4 685
1915, Mar. 3, c. 93, 38 Stat. 958 ..... 350, 355
1915, Dec. 17, Joint Resolution, c. 4, 39 Stat. 2 447
1916, May 18, c. 125, 39 Stat. 123 488
1916, May 18, c. 126, 39 Stat. 159, § 5 614

PAGE

1916, Aug. 29, c. 418, 39 Stat. 619, 645 ..... 365, 556, 664
§ 1 365
1916, Sept. 1, c. 433, 39 Stat. 676, § 7 ..... 583, 584
1916, Sept. 6, c. 448, 39 Stat. 726 ..... 130, 637, 681, 682, 685, 686
§ 2 ..... 681, 682, 685, 686
§ 3 685
1916, Sept. 7, c. 461, 39 Stat. 752 ..... 350, 355
1916, Sept. 8, c. 463, 39 Stat. 756 ..... 345, 346, 383, 447, 632, 633, 682
Tit. I, § 2a 682
Tit. II, § 201 ..... 345, 346
§ 202 346
§ 203 ..... 345, 346
§ 204 347
§ 205 347
§ 207 347
§ 208 347
§ 209 347
Tit. IV, § 411 447
1917, Mar. 2, c. 146, 39 Stat. 969 488
1917, Mar. 3, c. 159, 39 Stat. 1000 387
Tit. II 387
Tit. II, § 202 387
Tit. III 633
1917, Mar. 4, c. 180, 39 Stat. 1193 553
1917, Apr. 6, Joint Resolution, c. 1, 40 Stat. 1 365
1917, June 15, c. 29, 40 Stat. 182 ..... 366, 553
1917, June 21, c. 32, 40 Stat. 234, §§ 4, 5 ..... 350, 355
1917, Aug. 10, c. 53, 40 Stat. 276 ..... 547, 548, 553
§ 10 ..... 547, 548
§ 12 ..... 550, 553
§ 16 ..... 550, 553
§ 25 ..... 550, 553
1917, Oct. 3, c. 63, 40 Stat. 300 ..... 377, 383, 632
Tit. I 383
Tit. II, § 201 383
§ 203 ..... 38[illegible]
§ 207 ..... 377, 384
Tit. IX 633

PAGE

1917, Oct. 6, c. 79, 40 Stat. 353 553
1917, Oct. 6, c. 106, 40 Stat. 422, § 10 553
1917, Dec. 7, Joint Resolution, c. 1, 40 Stat. 429 365
1917, Dec. 19, Joint Resolution, 40 Stat. 1050 371
1917, Dec. 26, Proclamation, 40 Stat. 1733 ....365, 556, 558
1918, Mar. 1, c. 19, 40 Stat. 438 553
1918, Mar. 21, c. 25, 40 Stat. 451 231, 365, 409, 412, 553, 554, 556, 566, 665
§ 1 ....231, 560
§ 3 553
§ 10 ....409, 412, 554, 558
§ 12 560
§ 15 ....231, 555, 563
1918, Mar. 29, Proclamation, 40 Stat. 1763 ....365, 557
1918, Apr. 22, c. 62, 40 Stat. 535 553
1918, Apr. 26, c. 64, 40 Stat. 537 553
1918, May 16, c. 74, 40 Stat. 551, § 2 553
1918, May 20, c. 77, 40 Stat. 555, § 1 552
1918, May 25, c. 86, 40 Stat. 561 488
1918, May 31, Joint Resolution, c. 90, 40 Stat. 593 360
1918, July 1, c. 114, 40 Stat. 705, 720 553
§ 5, par. d 553
1918, July 8, c. 139, 40 Stat. 826, § 1 553
1918, July 11, c. 145, 40 Stat. 898, § 2 552
1918, July 16, Joint Resolution, c. 154, 40 Stat. 904 553, 662, 663
1918, July 18, c. 157, 40 Stat. 916, § 14 553
1918, July 22, Proclamation, 40 Stat. 1807 ....662, 663
1918, Oct. 5, c. 181, 40 Stat. 1010, § 3 553
1918, Nov. 21, c. 212, 40 Stat. 1048, § 1 553

PAGE

1919, Jan. 29, Proclamation, 40 Stat. 1941 376
1919, Feb. 24, c. 18, 40 Stat. 1057 ....632, 633, 682
Tit. II, §§ 210–214 ... 633
§ 210 634
§ 211 634
§ 212 634
§ 213 634
§ 213a 682
§ 214 634
§ 219 ....633, 634
Tit. IV, §§ 400–410 ... 634
Tit. XIV, § 1405 633
1919, Mar. 2, c. 94, 40 Stat. 1273, § 2 553
1919, Mar. 4, c. 125, 40 Stat. 1348, § 3 552
1919, June 30, c. 4, 41 Stat. 3 488
1919, Oct. 22, c. 80, 41 Stat. 297, Tit. II ..135, 137, 153, 159
§ 101 154
§ 106 157
§ 109 153
§ 122 154
1919, Oct. 28, c. 85, 41 Stat. 305 ....368, 370, 450, 460
Tit. II, § 3 ...368, 370, 460
§ 25 460
§ 26 ....368, 370
§ 29 460
§ 35 ....450, 461
Tit. III 368, 376, 461
§ 21 ....368, 376
1920, Feb. 14, c. 75, 41 Stat. 408 488
1920, Feb. 28, c. 91, 41 Stat. 456 556
Constitution. See Index at end of volume.
Ordinance July 13, 1787, Art. 4 (1 Stat. 51, 52, note) .114, 119
Revised Statutes.
§ 359 308
§ 367 308
§ 649 415
§ 700 415
§ 739 499
§ 2011 282
§ 2016 282
§ 2021 282

PAGE

Revised Statutes (*cont.*)
§ 2022 282
§ 2078 ..... 524, 525, 530
§ 2322 ..... 18, 25
§ 3257 ..... 450, 458
§ 3279 ..... 450, 458
§ 3281 ..... 450, 458
§ 3282 ..... 450, 458
§ 3477 ..... 655, 656
§ 3679 581
§ 3732 579
§ 3733 ..... 576, 578
§ 4914 ..... 36, 38
§ 4915 39
§ 5219 ..... 636, 637
§ 5503 579
§ 5508 290
§ 5520 290
§ 5522 282

U. S. Comp. Stats.
Vol. 6, § 5993 458
§ 6019 458
§ 6021 458
§ 6022 458
Vol. 8, § 9459 38
Vol. 10, § 10203 364
§ 10205 367
1918, § 1974a 365
§ 3115¾H 365

Bankruptcy Act, § 70a .. 395, 397

Criminal Appeals Act 457, 525, 530

PAGE

Criminal Code 341, 364
§ 37 ..... 243, 277, 524, 525
§ 39 ..... 363, 364
§ 41 367
§ 215 470
§ 272 (3) 341
§ 332 277

Interstate Commerce Acts 205–207, 406–411, 413–416, 566, 568
§ 1 ..... 566, 570
§ 3 ..... 416, 567, 571
§ 4 ..... 409, 416
§ 6 573
§ 16 ..... 408, 410, 414
§ 22 ..... 205, 207

Judicial Code 356, 496
§ 24 356
§ 24 (1) 350
§ 24 (16) 350, 357
§ 24 (20) 548, 549, 553
§ 28 ..... 417, 418
§ 128 549
§ 145 ..... 548, 550, 553
§ 234 ..... 490, 496
§ 237 .. 637, 681, 682, 684, 685
§ 241 535
§ 250 ..... 35, 38
§ 251 ..... 35, 38, 651
§ 266 171

Judiciary Act, 1789 499
§ 11 499

(B.) Statutes of the States and Territories.

Arkansas.
1905, Act No. 210 555
1915, Act No. 338 658
1919, Gen. Acts, p. 512 . 376
Kirby's Dig., § 6649 555

California.
1913, Stats., p. 252 130

Delaware.
1753–1777, Laws, pp. 165, 174 105
1817, Laws, p. 232, c. 133 105
1822–1824, Laws, p. 261, c. 162 105
1857, 11 Del. Laws, 482, c. 426 106

Delaware (*cont.*)
1875, 15 Del. Laws, 305, c. 181 106
1875, 15 Del. Laws, 306, c. 182 106
1877, 15 Del. Laws, 612, c. 473 107
1917, 29 Del. Laws, 844, c. 258 107
Rev. Code, 1852, c. 104 . 106
§ 2266 106
Rev. Code, 1915, § 1986 . 103
§§ 2009–2013 103
§ 4123 ..... 94, 102, 107
§ 4135 102
§ 4137 102
§ 4142 101

PAGE

Delaware (*cont.*)
§ 4143.....102, 106
§ 4145..... 101
§ 4150..... 103

Florida.
Gen. Stats., § 2812..... 656

Georgia.
Const..... 356
Code, 1895, § 2173..... 656

Illinois.
Const..... 119
1853, Laws, Feb. 12..... 126
1903, Laws, p. 217..... 126

Louisiana.
1914, Act No. 189..... 127

Massachusetts.
Const. (Amdt. XLIV, 1915)..... 595
1916, Gen. Acts, c. 269.. 595
1919, Gen. Acts, c. 314 589, 594

Michigan.
1913, Act No. 109...244, 276
§ 1.....244, 276
§ 19..... 277
1915, Act No. 156..... 260

Minnesota.
1915, Laws, c. 260.....41, 43
§ 1..... 43
§ 2..... 44

Missouri.
Const.....227, 229
1871–1872, Laws, p. 69 (Long-and-Short-Haul Statute)..... 134
1901, Laws, p. 232..314, 316
§ 2..... 316
1917, Laws, pp. 237–242 226, 228
§ 1..... 228
1909, Rev. Stats., § 3173 (Long-and-Short-Haul Statute)..... 134

Nebraska.
Const..... 266

Nevada.
1913, Stats., p. 411, c. 266..... 223

PAGE

New Mexico.
Const., Art. VIII, § 1 642, 644, 649
1919, Laws, p. 182, c. 93 642, 643
§ 2..... 647
§ 8..... 648

New York.
Const. 1846, Art. 5, § 3. 501
1919, Laws, c. 264..495, 501
1920, Laws, c. 131..... 196
1920, Laws, c. 136..... 172
1920, Laws, c. 942..171, 196
1920, Laws, c. 943..... 172
1920, Laws, c. 944..172, 198
1920, Laws, c. 945..... 173
1920, Laws, c. 947..173, 196
1920, Laws, c. 951 171, 173, 196
Penal Law, § 2040..... 173
Canal Law (Consol. Laws, 1909, p. 269). 502
§ 46..... 502
§ 47..... 502

North Carolina.
1917, Laws, c. 231, § 72 421, 423

Ohio.
1 Chase's Stat. 462, § 15 105

Oklahoma.
Const., Schedule, § 2 (Rev. Laws, 1910, p. cxcix).....520, 523
1907–1908, Laws, p. 176, §§ 7–8..... 538
Comp. Laws, 1909, § 724 531, 537
Code, § 6328..... 322
§ 8341.....319, 321
§ 8418..... 321
§ 8419..... 321

Pennsylvania.
Workmen's Compensation Act..... 333

Virginia.
1915, Acts, p. 119, c. 85. 637
1915, Acts, p. 160, c. 117. 637

(C.) TREATIES.

PAGE

China.
1880, Nov. 17, 22 Stat. 826 401
1894, Mar. 17, 28 Stat. 1210 401

Indian.
Choctaw, June 22, 1855, 11 Stat. 611 443
Omaha, Mar. 16, 1854, 10 Stat. 1043 ..... 1, 4
Art. I 6
Art. VI 6
Omaha, Mar. 6, 1865, 14 Stat. 667 ..... 1, 4
Art. IV 7

PAGE

Mexico.
1828, Jan. 12, 8 Stat. 372 82

Spain.
1819, Feb. 22, 8 Stat. 252 70, 81, 608
Art. III 71 81
Art. IV 92

Texas, Republic of.
1838, Apr. 25, 8 Stat. 511 82

CASES ADJUDGED

IN THE

SUPREME COURT OF THE UNITED STATES

AT

OCTOBER TERM, 1920.

CHASE, JR., A MINOR, ETC. *v.* UNITED STATES.

APPEAL FROM THE CIRCUIT COURT OF APPEALS FOR THE EIGHTH CIRCUIT.

No. 242. Argued March 21, 22, 1921.—Decided April 11, 1921.

1. The cession made by the Omaha Indians through the treaties of 1854 and 1865, the provision made by the latter for assigning parcels, in the retained reservation, to members of the tribe in severalty, for the exclusive use of themselves, their heirs and descendants, the provisions made by the Act of 1882 (and the Act of 1893) for granting allotments in severalty in trust for 25 years and then in fee, and the further provision of the former act (not carried out) for conveying the unallotted residue of the reservation to the tribe in trust for a like period and then in fee discharged of the trust and of all charge and incumbrance whatsoever,—did not deprive Congress of the power to make other disposition of the unallotted reservation for the benefit of the Indians. P. 6. *United States* v. *Chase*, 245 U. S. 89; *Sizemore* v. *Brady*, 235 U. S. 441.
2. The right to obtain an allotment under the acts referred to was not a vested right as respects this power of Congress. P. 7.
3. The Act of May 11, 1912, c. 121, 37 Stat. 111, by which the Secretary of the Interior was "authorized" to sell all the unallotted lands of the Omaha Reservation in parcels, with certain specific exceptions, covers the whole subject of the disposition of those lands and supersedes the earlier provisions, *supra*, for allotting them. P. 8.

4. Even if this act should be construed as permissive rather than mandatory, the Secretary's refusal to allow further allotments because of it is an exercise of his discretion to reserve the land for disposition under it. P. 8.
5. Whether a party defendant, upon reversal of a judgment in his favor, may introduce a new defense which was available on the former trial, is not a question of jurisdiction but of practice. P. 9.
6. *Held*, that the courts below rightly permitted the United States to set up a statutory repeal at the second trial which was ignored at the first. P. 10.

261 Fed. Rep. 833, affirmed.

APPEAL from a decree of the Circuit Court of Appeals, which affirmed a decree of the District Court dismissing the bill in a suit brought by the appellant against the United States for an adjudication of his membership in the Omaha Tribe of Indians with a right to select an allotment out of the lands of the Omaha Reservation. The facts are stated in the opinion.

See also the reports of the case in the court below, 238 Fed. Rep. 887; 261 Fed. Rep. 833; and *Gilpin* v. *United States*, 261 Fed. Rep. 841, s. c., *post*, 10.

Mr. John Lee Webster, with whom *Mr. Hiram Chase* was on the briefs, for appellant:

The federal court has jurisdiction of suits by persons of Indian blood claiming right to allotment of Indian lands.

The appellant was born into a right to allotment under the Act of 1882, as amended by the Act of 1893. *Chase* v. *United States*, 238 Fed. Rep. 887, 890.

The United States cannot now shift its ground of defense. Having relied at the first trial, and on the first appeal, upon the single proposition that the Act of 1893 repealed the Act of 1882, and thereby cut off the right to allotment, and having failed in that defense, it cannot, upon the second trial, abandon that defense and insist that the Act of May 11, 1912, repealed the Act of 1882. *Cromwell* v. *County of Sac*, 94 U. S. 351, 353; *Railway*

Co. v. *McCarthy*, 96 U. S. 258, 267, 268; *Davis* v. *Wakelee*, 156 U. S. 680, 689, 690; *Werlein* v. *New Orleans*, 177 U. S. 390; *Southern Cotton Oil Co.* v. *Shelton*, 220 Fed. Rep. 247, 256; *Smith* v. *Boston Elevated Ry. Co.*, 184 Fed. Rep. 387, 389; *Oakland Sugar Mill Co.* v. *Wolf Co.*, 118 Fed. Rep. 239, 248; *Brooks* v. *Laurent*, 98 Fed. Rep. 647, 655.

This doctrine of estoppel against changing the grounds of defense, or shifting positions, applies to the United States as well as to individuals. *United States* v. *California & Oregon Land Co.*, 192 U. S. 355; *Northern Pacific Ry. Co.* v. *Slaght*, 205 U. S. 122.

The Act of May 11, 1912, did not repeal the Act of 1882, or the amendatory Act of 1893. In any event, the Acts of 1882 and 1893, providing for allotments to members of the tribe, remain in full force, and continue to be operative until there shall be an actual sale of the lands. The Act of 1912 does not make reference to the other acts, and contains no repealing clause. The repealing clause in the original draft of the act was stricken out. It contains no words which, by their terms, take away the continuing right of allotment provided for in the other acts.

Repeals by implication are not favored.

The Secretary of the Interior has never taken any steps to sell, nor made any declaration that he intends to sell the lands of the Omaha Reservation, under the Act of 1912. The language of the act is neither directory nor mandatory; it only authorizes the Secretary to sell—a discretionary power.

The title in fee to the reservation, under § 8 of the Act of 1882, became vested in the Indian tribe, and a patent in fee should have been executed by the United States July 10, 1909. The United States has no interest or title in the lands of the reservation which the Secretary could sell or convey under the Act of 1912. The Act of 1912 is therefore of no force or effect. *Chase* v. *United States*, 238 Fed. Rep. 887, 890.

The fact that the United States neglected to perform a ministerial duty, to-wit, to issue the patent in fee to the tribe, did not reinvest the title in the United States nor give the United States a right to sell the lands.

The proviso in § 8 of the Act of 1882, by which the United States bound itself, at the expiration of the trust period, to convey the reservation by patent to said Omaha Tribe of Indians in fee discharged of said trust and free of all charges or incumbrances whatsoever, was a contractual obligation based upon ample consideration.

Mr. Assistant Attorney General Garnett, with whom *Mr. H. L. Underwood*, Special Assistant to the Attorney General, was on the brief, for the United States.

Mr. Oscar C. Anderson, with whom *Mr. Charles J. Kappler* was on the brief, for the Omaha Tribe of Indians, by special leave of court.

MR. JUSTICE MCKENNA delivered the opinion of the court.

Suit to adjudge Hiram Chase, Jr., a member of the Omaha Tribe of Indians and to have a right to select eighty acres for an allotment out of the lands of the Omaha Reservation, the selection having been denied by the Secretary of the Interior.

The right of selection depends upon the effect of certain treaties between the Omaha Tribe and the United States and certain acts of Congress.

The treaties were made in 1854 and in 1865, 10 Stat. 1043, 14 Stat. 667, and by them the Indians ceded certain lands to the United States and certain other lands were retained constituting the Reservation with which this suit is concerned and of which the lands sought to be allotted are a part.

It was expressed in the treaty of 1865 to be the desire of the Indians to abolish the tenure in common by which they held their lands and to acquire tracts in severalty of 160 acres to heads of families and 40 acres to each male person of 18 years and upwards; and it was provided that the whole of the lands so assigned or unassigned should constitute and be known as the Omaha Reservation.

The assignments were to be approved by the Secretary of the Interior, be evidenced by certificates, and be final and conclusive.

In execution of the purposes of the treaty, Congress passed an act in 1882 (22 Stat. 341) by which the Secretary was authorized to allot the portion of the reservation lying east of the Sioux City and Nebraska Railroad in severalty, to each head of a family a quarter section (160 acres); to each single person over 18, one-eighth of a section; to each orphan child under 18, one-eighth of a section; and to each other person under that age, one-sixteenth of a section. The issue of patents was provided for, the lands to be held in trust for 25 years for the sole use and benefit of the respective allottees. And it was provided (§ 8) that the residue of the lands should be patented to the tribe but held in trust for 25 years, and then to be conveyed in fee discharged of the trust. From these lands, however, it was provided that allotments should be made and patented to each Omaha child who might be born prior to the expiration of the 25-year trust period.

Under the act and prior to July 11, 1884, allotments were made to 954 members of the tribe and patents issued therefor. No patent was issued to the tribe as provided.

By the Indian Appropriation Act passed March 3, 1893, c. 209, 27 Stat. 630, and expressing itself to be an amendment to the Act of 1882, the Secretary of the Interior was authorized with consent of the Indian tribe to allot in severalty ". . . to each Indian woman and child of said tribe born since allotments of land were

made in severalty to the members thereof under the provisions of said act [1882], and now living, one-eighth of a section of the residue lands held by that tribe in common, instead of one-sixteenth of a section, as therein provided, and to allot in severalty to each allottee under said act, now living, who received only one-sixteenth of a section thereunder, an additional one-sixteenth of a section of such residue lands. . . ."

Hiram Chase, Jr., was not born until after the Act of 1893 was passed, and the question is, whether he is entitled to an allotment under it? The Government contends to the negative, basing the contention upon an Act passed May 11, 1912, c. 121, 37 Stat. 111, which, it is the further contention, repealed the Act of 1893, and cut off the right of allotment.

The District Court yielded to the contention and dismissed the bill, and its decree was affirmed by the Circuit Court of Appeals. 261 Fed. Rep. 833.

Against this action of the courts appellant asserts error, and insists that it and the contention of the Government are based on an underestimate of his rights and upon a wrong construction of the Act of 1893.

First as to his rights. The contention is that appellant had a vested right to an allotment "under the treaties and acts of Congress as they existed at the time when" the allotment was "selected and claimed" and this whether the Act of 1912 repealed the Act of 1893 or was subordinate to or complementary of its provisions. In support of the contention appellant recites the various provisions of the treaty of 1865 and the Acts of 1882 and 1893 and insists that they are clear and direct investments of irrevocable rights in pursuance of "a contractual obligation based upon ample consideration." In specification the treaty of 1854 is adduced as having "ceded to the United States a portion of the Reservation described in Article I" and "by Article VI, individual Indians were to receive allot-

ments of lands." This purpose, is the further contention, was executed by the treaty of 1865 by which the Indians "*did 'cede, sell, and convey to the United States'*" a part of their Reservation, and among other provisions there was one, expressed in Article IV of the treaty, for allotments to be "for the exclusive use and benefit of themselves [the Indians], their heirs, and descendants."

Of the obligations thus incurred, it is the insistence, § 8 of the Act of 1882 was the fulfillment, and at the expiration of the trust period the Reservation (residue) was to be conveyed to the tribe "in fee discharged of said trust and free of all charge or incumbrance whatsoever" and that, therefore, the Act of 1912 which directed the sale of the unallotted lands of the Reservation was in contravention of the treaties and the rights to allotments thereunder and under the Acts of Congress of 1882 and 1893, *supra*.

The contention is one that has often been made in this court and rejected as often as made. *Gritts* v. *Fisher*, 224 U. S. 640; *Choate* v. *Trapp*, 224 U. S. 665; *Cherokee Nation* v. *Hitchcock*, 187 U. S. 294. In those cases the relation of the individual Indian to the tribal property is explained and also the power of Congress over that property and the tribes. In the recent case of *United States* v. *Chase*, 245 U. S. 89, we had occasion to consider the Reservation here involved and the effect of Article IV of the treaty of 1865 relied on by the appellant, and decided that its purpose was to do no "more than to individualize the existing tribal right of occupancy" and that it left "the fee in the United States" and left "the United States and the tribe free to take such measures for the ultimate and permanent disposal of the lands, including the fee, as might become essential or appropriate in view of changing conditions, the welfare of the Indians and the public interests."

The case dealt with assignments under Article IV, but

its principle necessarily applies to a mere right under the Act of 1882. *Lone Wolf* v. *Hitchcock*, 187 U. S. 557; *Sizemore* v. *Brady*, 235 U. S. 441; *Cherokee Intermarriage Cases*, 203 U. S. 76; *Wallace* v. *Adams*, 204 U. S. 415; *Stephens* v. *Cherokee Nation*, 174 U. S. 445.

The next contention of appellant is that he acquired a vested right under the Acts of 1882 and 1893 assuming the latter act did not repeal the other, and we are brought to the Act of 1912. By that act the Secretary is "authorized to cause to be surveyed, if necessary, and appraised, in such manner as he may direct, in tracts of forty acres each, or as nearly as to the Secretary may seem practicable, and, after such survey and appraisement, to sell and convey, in quantities not to exceed one hundred and sixty acres to any one purchaser, all the unallotted lands on the Omaha Indian Reservation, in the State of Nebraska, except such tracts as are hereinafter specifically reserved: *Provided*, That the said land shall be sold to the highest bidder under such regulations as the Secretary of the Interior may prescribe, but no part of said land shall be sold at less than the appraised value thereof. . . ." There is provision for the reservation from sale of certain tracts with which this case is not otherwise concerned except as it shows complete delegation of administration to the Secretary. Appellant's contention is that the act is neither directory nor mandatory; it is permissive only and has been, it is said, so construed by the Secretary. There are cases, however, that decide that an officer "authorized" is an officer commanded in a matter of public concern.[1] Besides, there are words of direction in the act and they are necessary to its purposes. But, if it

[1] *Anne Arundel County Commissioners* v. *Duckett*, 20 Md. 468; *Flynn* v. *Canton Co.*, 40 Md. 312, 319; *Magaha* v. *Hagerstown*, 95 Md. 62; *Rankin* v. *Buckman*, 9 Or. 253, 262; *Supervisors* v. *United States*, 4 Wall. 435; *Maryland* v. *Miller*, 194 Fed. Rep. 775; *United States* v. *Cornell Steamboat Co.*, 137 Fed. Rep. 455.

may be assumed there is a discretion in the Secretary, he has exercised it against the appellant by denying his right to an allotment, presumably in reservation of the land for sale as provided in the act. And a sale is provided for—a sale of the unallotted lands mentioned in § 8 of the Act of 1882, and all of them. We agree, therefore, with the Circuit Court of Appeals that the Act of 1912 "covers so completely the subject of the disposition" of those lands "that it must be held to have repealed that portion of the Act of 1882 which authorized allotments to Omaha children during the trust period." And, again quoting the Court of Appeals, "the Secretary of the Interior, of course, could not allot the unallotted lands under the Act of 1882, and also sell them under the Act of 1912; nor could he allot the unallotted lands and at the same time make the reservations which he is commanded to make by section 2 of the latter act. It is so plain that both acts cannot be carried out that it is unnecessary to discuss that question." It supersedes, therefore, that act though it contains no repealing words. *United States* v. *Tynen*, 11 Wall. 88; *King* v. *Cornell*, 106 U. S. 395; *The Paquete Habana*, 175 U. S. 677, 685.

This appeal is a review of the second trial of the case. In the first trial the District Court on motion of the United States dismissed the bill. Upon appeal the Circuit Court of Appeals reversed the District Court and remanded the case to that court "with instructions to permit the defendant [United States] to answer, if so advised." 238 Fed. Rep. 887.

Upon the return of the case the United States set up as a defense the Act of 1912 presenting the questions here involved.

Appellant contends that the United States "having relied at the first trial upon the single proposition that the Act of 1893 repealed the Act of 1882, and thereby cut off the right of these Indian claimants to allotments, and

having failed in that defense, cannot, upon the second trial, abandon that defense and insist that the Act of May 11, 1912, repealed the Act of 1882."

The proposition has a relevant and conclusive application when a judgment of a former action is pleaded but limited application when urged in the same suit, it expresses a practice only and useful as such, but not a limitation of power. *Messenger* v. *Anderson*, 225 U. S. 436.

The District Court and the Circuit Court of Appeals, having the power and exercising it, entertained the defense of the Act of 1912, estimated it and decided it conclusive against appellant's right to an allotment. As we have seen there was no error in that ruling, and the decree of the Circuit Court of Appeals is

Affirmed.

GILPIN, A MINOR, ETC. *v.* UNITED STATES.

APPEAL FROM THE CIRCUIT COURT OF APPEALS FOR THE EIGHTH CIRCUIT.

No. 243. Argued March 21, 22, 1921.—Decided April 11, 1921.

Decided on the authority of *Chase, Jr.* v. *United States*, *ante*, 1. 261 Fed. Rep. 841, affirmed.

THE case is stated in the opinion.

Mr. John Lee Webster, with whom *Mr. Hiram Chase* was on the briefs, for appellant.

Mr. Assistant Attorney General Garnett, with whom *Mr. H. L. Underwood*, Special Assistant to the Attorney General, was on the brief, for the United States.

Mr. Oscar C. Anderson, with whom *Mr. Charles J. Kappler* was on the brief, for the Omaha Tribe of Indians, by special leave of court.

MR. JUSTICE MCKENNA delivered the opinion of the court.

This case was argued and submitted with the *Chase Case*, No. 242, *ante*, 1. It is a suit by Mary Gilpin by her next friend to have adjudged to her a right to an allotment of lands in the Omaha Reservation, she being an Omaha Indian. The right is based on the same treaties and acts of Congress as those passed upon in the *Chase Case*, and the effect of the Act of May 11, 1912, repealing the acts—that of 1882 and that of 1893.

The decree of the District Court was adverse to her right, and this decree was affirmed by the Circuit Court of Appeals. 261 Fed. Rep. 841.

For the reasons stated in the opinion in the *Chase Case*, the decree of the Circuit Court of Appeals is

Affirmed.

UNITED STATES v. L. P. & J. A. SMITH.

APPEAL FROM THE COURT OF CLAIMS.

No. 253. Argued March 22, 23, 1921.—Decided April 11, 1921.

1. In the performance of a contract with the United States for the excavation of a channel to specified depths, under attached specifications describing the materials to be removed as clay, sand, gravel, and boulders in unknown proportions, deposits consisting largely of limestone were encountered, the removal of which entailed an expense per cubic yard much exceeding the price fixed by the con-

tract for the materials therein specified. The engineer officer in charge of the work arbitrarily classified these deposits with the materials described by the specifications; ignored the protest of the contractors and their request that a new price be fixed therefor; and required them to proceed, under threats that, otherwise, they would be declared in default and the work taken from them and completed and the cost recouped from the retained percentages of their pay already earned and through legal proceedings against themselves and their sureties. *Held*, that clauses in the contract making decisions of the officer as to quantity and quality of work final, requiring the contractors to observe his instructions and denying any claim for modification of the work not agreed to, or expressly required, in writing,—were inapplicable, and that the contractors were entitled to recover from the United States the cost of excavating the material not covered by the contract. P. 15.

2. Contractors with the United States *held* entitled to recover the amount of a loss due to delays of the engineer in charge in locating the places where they should work. P. 17.

54 Ct. Clms. 119, affirmed.

APPEAL from a judgment against the United States for loss suffered by contractors in performing work not covered by their contract, under the arbitrary exaction of the official in charge, and for loss due to his delay in locating the places where work was to be done. The facts are stated in the opinion.

Mr. Assistant Attorney General Davis, with whom *Mr. Wilfred Hearn*, Special Assistant to the Attorney General, was on the briefs, for the United States.

The provisions of the contract and specifications relied on chiefly by the United States were as follows:

"The decision of the engineer officer in charge as to quality and quantity shall be final."

"The order of the work will be determined by the U. S. agent in charge, and his instructions shall be observed by the contractor and his employees."

"In case of differences arising between the U. S. agent in charge and the contractor in regard to the work or to

the specifications, appeal may be made to the engineer officer in charge."

"The material to be removed consists of clay, sand, gravel, and boulders, all in unknown proportions."

"No claim whatever shall at any time be made upon the United States by the party or parties of the second part for or on account of any extra work or material performed or furnished, or alleged to have been performed or furnished, under or by virtue of this contract, and not expressly bargained for and specifically included therein, unless such extra work or materials shall have been expressly required in writing by the party of the first part or his successor, the prices and quantities thereof having been first agreed upon by the contracting parties and approved by the Chief of Engineers."

The propositions advanced in argument were:

The work was not work provided for or required by the terms of the contract, but extra and outside of the contract.

No obligation to pay for extra work was created, because the provisions of the contract relating to the procurement of, and the payment for, extra work were not complied with, and there was not a waiver of such provisions.

There was no breach of warranty by the United States relating to a matter material and necessary to the performance of the contract.

The petition does not allege, neither has the court found, that bad faith on the part of an officer of the United States, in the exercise of the powers conferred upon such officer, produced the injury of which claimants complain.

The recovery for lost time was not justifiable. The officer in charge was entitled to a reasonable time to locate the places where dredging was to be done, and

the court below has not found that the delay was unreasonable or actuated by bad faith or fraud.

Mr. John E. Morley, with whom *Mr. Rufus S. Day* and *Mr. Roscoe M. Ewing* were on the brief, for appellees.

MR. JUSTICE MCKENNA delivered the opinion of the court.

April 14, 1919, the Court of Claims rendered a judgment against the United States in favor of L. P. & J. A. Smith (appellees, and we shall so refer to them) for the sum of $119,304.27. To review that judgment this appeal is prosecuted.

The appellees were a partnership doing business at the times herein stated under the firm name of L. P. and J. A. Smith.

In response to an advertisement and after the submission of proposals for work at the mouth of the Detroit River, a contract in writing was entered into December 31, 1892, by O. M. Poe, Colonel, Corps of Engineers, U. S. Army, and appellees, by which the latter agreed to excavate a ship channel 20 and 21 feet deep, located in section 8 of the Detroit River, in accordance with specifications attached to the contract and made a part thereof. They were to receive in full compensation for their work the sum of 18 cents per cubic yard of excavation, scow measure.

The material to be removed was specified to consist "of clay, sand, gravel, and boulders, all in unknown proportions."

In the season of 1894 there was discovered a natural bed of limestone rock within the boundaries of the excavation called for by the contract, which was not provided for by the contract. For the removal of this limestone the United States advertised for bids.

The L. P. & J. A. Smith Company, a corporation of Ohio, and a successor in interest to L. P. and J. A. Smith, bid on the work. The bid was accepted and a contract was entered into November 9, 1894, by which that company agreed to remove the rock and other material at the price of $2.24 per cubic yard of excavation, bank measure. The contract was completed on or about June 16, 1895.

The contract of December 31, 1892, was extended from time to time by Col. Lydecker, the engineer in charge of the work, he having succeeded Colonel Poe, to July 1, 1897. In that year he ordered appellees to work at particular spots toward the northerly end of section 8, at certain designated shoals which had been excavated under the contract of November 9, 1894, with the L. P. & J. A. Smith Company.

And certain other officers, one an assistant engineer, another a sub-inspector, in charge of the work, insisted upon locating for appellees the points where dredging was to be done.[1]

The material or a large part of the material to be removed from those points was limestone rock or limestone bed rock. Appellees protested and asked for the fixing of an extra price for doing the work. This was refused and they were told that if they did not remove the same they would be declared defaulting contractors; that the work would be taken from them, done and charged to them, and be paid for from the retained percentages for work already performed, and, if the percentages were not sufficient for that purpose, they, appellees, and their bondsmen, would be proceeded against. No other officer or officers so told appellees or insisted that all the material to be removed was clay, sand, gravel, and boulders.[1]

A large part of the material, arbitrarily stated to be clay, gravel, sand and boulders, was in fact limestone

[1] Additional finding upon the mandate of this court.

rock and limestone bed rock, and was not the material specified in the contract.

The quantity of material excavated as thus required, and that required by the contract, the findings estimate in detail and the cost of its excavation, in the sum of $116,760.61, from which was deducted the sum of $5,174.64 that had been paid appellees, leaving due to them $111,-585.97. It is found besides that delays caused by the engineer in charge resulted in a loss to the appellees of $7,718.30. For these two sums judgment was rendered.

The Court of Claims in a brief memorandum summarized the elements of liability against the United States, concluding as follows: "We think the right of plaintiffs [the appellees] to recover the price for the work done by them is indisputable."

The United States adduces against the conclusion certain provisions of the specifications, the latter being, as we have seen, part of the contract.

They are too long to quote or even summarize. They are to the effect that the decision of the engineer officer in charge as to quality and quantity of work was final and that his instructions were required to be observed by the contractor. And further that modifications of the work in character and quality, whether of labor or material, were to be agreed to in writing and unless so agreed to or expressly required in writing no claim should be made therefor.

The contention overlooks the view of the contract entertained by Colonel Lydecker and the uselessness of soliciting or expecting any change by him. His conduct, to use counsel's description, "though perhaps without malice or bad faith in the tortious sense," was repellent of appeal or of any alternative but submission with its consequences. And we think, against the explicit declaration of the contract of the material to be excavated and its price. The contract provided, in response to advertise-

ments and in fulfillment of bids, for the excavation of a ship channel 20 and 21 feet deep and that "the material to be removed consists of clay, sand, gravel, and boulders, all in unknown proportions." To these explicit provisions and their contractual force we may add the judgment and conduct of Colonel Poe, the first engineer officer in charge of the work. He realized immediately when a bed of limestone rock was encountered it was not the material stated in the contract, and without hesitation entered into another contract concerning it, and at a price of significant contrast—18 cents per cubic yard, scow measure, being the price of the first contract, $2.24 per cubic yard of excavation, bank measure, being the price of the second contract.

We think the case is within the principle of *Hollerbach* v. *United States*, 233 U. S. 165; *Christie* v. *United States*, 237 U. S. 234; *United States* v. *Spearin*, 248 U. S. 132, and *United States* v. *Atlantic Dredging Co.*, 253 U. S. 1.

We concur, therefore, with the declaration of the Court of Claims that "the right " of the appellees "to recover the price for the work done by them is indisputable," including the loss to them while waiting for the engineer "to locate their work."

Judgment affirmed.

MR. JUSTICE DAY and MR. JUSTICE MCREYNOLDS took no part in the decision.

SILVER KING COALITION MINES COMPANY *v.* CONKLING MINING COMPANY.

CERTIORARI TO THE CIRCUIT COURT OF APPEALS FOR THE EIGHTH CIRCUIT.

No. 158. Petition for rehearing.—Decided April 11, 1921.

1. Petition for rehearing treated as a motion for the determination of questions argued but left open by the former decision, 255 U. S. 151. P. 25.
2. Within the intent of the mining law, Rev. Stats., § 2322, with respect to the right to pursue a vein extralaterally on its dip, those are the "end lines" of a lode location that cut across the strike of the vein, if it crosses the location. P. 25.
3. A presumption that there was a discovery vein crossing the end lines of a location as laid out should not be indulged, for the purpose of denying extralateral rights to a vein crossing the side lines, where there is substantial evidence that this was the only vein apexing within the location and no substantial evidence to the contrary. P. 26.
4. Where the vein of a patented claim crossed the location transversely, *held* that the right to pursue it on dip beneath an adjacent junior patented claim was not affected by the fact that either the discovery shafts of the senior claim or the vein would be left outside of it if its side lines (located as end lines) were limited as they should be, because a discovery shaft was not essential to the validity of the location at the time when it was made, and because discovery of the vein must be presumed in favor of the senior patent. P. 27.
5. Evidence *held* to prove that one of a series of similar deposits, found at many different horizons, connected with a fissure vein and similar in composition to the ore in the fissure, was a part of that vein rather than a distinct bedded deposit. P. 27.

Decree (230 Fed. Rep. 553) reversed.

PETITION by the respondent for a rehearing as to questions presented but left undecided in s. c., 255 U. S. 151. The questions are disposed of on the argument as originally made.

Mr. William D. McHugh, Mr. William W. Ray, Mr. William H. King and *Mr. Francis B. Critchlow*, in support of the petition. The following matter is taken from one of their briefs used at the argument preceding the former decision:

Under no circumstances has the owner of a vein which has its strike across the location the right to follow the vein extralaterally through the plane of the located end line. The question has never been decided by this court,—reviewing *Flagstaff Silver Mining Co.* v. *Tarbet*, 98 U. S. 463; and *Argentine Mining Co.* v. *Terrible Mining Co.*, 122 U. S. 478. In *King* v. *Amy & Silversmith Mining Co.*, 152 U. S. 222, first appears the dictum that the end lines are to be treated as side lines, repeated in *Last Chance Mining Co.* v. *Tyler Mining Co.*, 157 U. S. 683; *Del Monte Mining Co.* v. *Last Chance Mining Co.*, 171 U. S. 55; and *Walrath* v. *Champion Mining Co.*, 171 U. S. 293.

Even if we may allow the necessity or propriety of renaming the located end lines in order to distinguish them from the located side lines under their new relation, this would not involve the necessity or the propriety of defining the office and function of such located end lines under such abnormal conditions. The four cases above referred to are the only ones in which this court has expressed any opinion as to the rights of a locator to extralateral pursuit of his vein beyond the located end lines, where by legal construction the located side lines have become the end lines of his location.

The question here involved is one as to which courts and text writers are at variance. No case has arisen in any of the Circuit Courts of Appeals in which it has been decided so far as we are aware. The principle was conceded by counsel for both parties and adopted by the Circuit Court of Appeals of the Ninth Circuit in *Bunker Hill & Sullivan Mining Co.* v. *Empire State-Idaho Mining Co.*, 109 Fed. Rep. 538, both parties claiming the ore bodies

in dispute through the right of extralateral pursuit through located end lines.

In the case at bar the court below (230 Fed. Rep. 561) did not find it necessary to decide the point, for the reason that it determined, as a matter of fact, that the discovery vein coursed along and not across the locations, and therefore that the end lines in question were in law and in fact the end lines of the several claims.

Three Circuit or District Courts of the United States have felt themselves constrained to follow the *dicta* of this court in the cases above referred to. One only of these cases was reported. It is the opinion of District Judge Townsend of the District of Connecticut, in a ruling on demurrer to a complaint upon a contract relating to mining claims in Arizona. The same holding was made by District Judge Marshall in *Keeley* v. *Ophir Hill Mining Co.*, (unreported), and followed by him in the case at bar. See also, *Catron* v. *Old*, 23 Colorado, 433; *Stewart Mining Co.* v. *Ontario Mining Co.*, 23 Idaho, 724.

Commentators on mining law disagree on this question. 2 Lindley on Mines, § 589; 2 Snyder on Mines, 721; Morrison's Mining Rights, 15th ed., 218.

This gift of Congress to the locator and the rule which it attempted to establish for his benefit have reference to an extraordinary right superadded to the common-law rights inhering in the grant of the bounded premises. This right was upon the statutory condition that in laying the lines of his location upon the surface he lay them so that the side lines, to-wit, the longer lines, embrace the outcrop of the vein upon its strike and the end lines cross the same so that planes drawn through the latter shall bound his rights. In every case the burden lies upon a party claiming extralateral rights to show that he comes strictly within the conditions of the grant. 230 Fed. Rep. 561. See *Iron Silver Mining Co.* v. *Elgin Mining Co.*, 118 U. S. 196.

The locator who has framed his notice of location, placed and maintained his stakes, and especially the locator who has caused his land to be surveyed and monumented by officials of the Land Department, should not thereafter be permitted to claim to the injury of a junior locator that a mistake was made. It is a clear case of estoppel.

Whatever may be the holding of this court as to the right generally to follow a vein upon its dip through the located end lines, in the case at bar no such right exists, for the reason that the apex of the Crescent Fault Fissure is more than 300 feet distant from the discovery point. No reason can be conjectured why it is not as essential to draw the side lines of the location at a distance not exceeding 300 feet on each side of the center of the lode as it is to draw the end lines parallel. A violation of the latter requirement destroys, or at least limits, the right of extralateral pursuit, and there is no reason why a violation of the former should not have the same effect as to all the surface in excess of what would be within a proper location.

It is well established that a United States patent issued without authority of law as well as one issued in spite of a law prohibiting its issuance, is invalid. Costigan, Mining Law, 393; 2 Lindley on Mines, § 362; *Lakin* v. *Dolly*, 53 Fed. Rep. 333; *Lakin* v. *Roberts*, 54 Fed. Rep. 461; *Richmond Mining Co.* v. *Rose*, 114 U. S. 576; *Doolan* v. *Carr*, 125 U. S. 618; *Peabody Gold Mining Co.* v. *Gold Hill Mining Co.*, 111 Fed. Rep. 817; *Jones* v. *Wild Goose Mining Co.*, 177 Fed. Rep. 95.

Mr. Thomas Marioneaux, *Mr. W. H. Dickson*, *Mr. A. C. Ellis, Jr.*, and *Mr. R. G. Lucas* against the petition. The following is extracted from their briefs used at the argument preceding the former decision:

Soon after the passage of the Act of 1872, it was deter-

mined by this court in *Flagstaff Silver Mining Co.* v. *Tarbet*, 98 U. S. 463, that, when the vein on its course and at its top crossed the located side lines of the claim, these side lines must be taken to be the legal end lines beyond which the locator is not permitted to pursue his vein either at or beneath the surface. In that case, as well as in *King* v. *Amy & Silversmith Mining Co.*, 152 U. S. 222, 228; *Iron Silver Mining Co.* v. *Elgin Mining Co.*, 118 U. S. 196; *Del Monte Mining Co.* v. *Last Chance Mining Co.*, 171 U. S. 55, 89; and *Last Chance Mining Co.* v. *Tyler Mining Co.*, 157 U. S. 683, it is said that, where a vein so crosses the side lines of the claim, these lines are the end lines and the (located) end lines the side lines of the claim. In none of these cases, however, was the question of the right of the locator to follow his vein extralaterally between planes drawn vertically through the located side lines extended in their own direction involved, but in each the courts manifestly entertained the opinion that such right existed. The question of this right was clearly presented and upheld, however, in the case of *Empire Milling Co.* v. *Tombstone Mill Co.*, 100 Fed. Rep. 910, 913–914. See also *Last Chance Mining Co.* v. *Bunker Hill & Sullivan Mining Co.*, 131 Fed. Rep. 579, 586–8; *Empire State-Idaho Mining Co.* v. *Bunker Hill & Sullivan Mining Co.*, 131 Fed. Rep. 591, 603–4; *Empire Milling Co.* v. *Tombstone Mill Co.*, 131 Fed. Rep. 339, 344; *Gleeson* v. *Martin White Co.*, 13 Nevada, 459–460.

Again, it has been decided that, in case the vein at its top and on its course crosses one end line of the claim, and is cut off and terminates before the opposite end line is reached, the locator is under the law entitled to the vein throughout its depth between planes drawn one through the end line so crossed, and another parallel thereto, through the point where the vein terminates. *Carson City Gold & Silver Mining Co.* v. *North Star Mining Co.*, 73 Fed. Rep. 597, 602–3.

It is well settled, too, that, where a vein crosses one end line of the claim but departs therefrom through a side line thereof, the locator is entitled to such vein through its entire depth between planes drawn vertically downward, one through such crossed end line and the other parallel thereto through the point where the vein passes out of the claim through such side line. *Del Monte Mining Co.* v. *Last Chance Mining Co.*, 171 U. S. 55.

The statute should be liberally construed in favor of the locator, so as to give him every benefit of it in its true spirit and intent. *Consolidated Wyoming Gold Mining Co.* v. *Champion Mining Co.*, 63 Fed. Rep. 540; *Keeley* v. *Ophir Hill Mining Co.*, U. S. District Court, Utah (unreported); *Tyler Mining Co.* v. *Last Chance Mining Co.*, 71 Fed. Rep. 848, 851.

In each of the foregoing instances of irregular locations—irregular in that they were not laid upon the vein or lode in the manner which the courts have said Congress contemplated—the extralateral right of the locator was upheld on the ground that from a correct interpretation of the act it was apparent that the intention of Congress was to secure to the locator the same length of the vein at depth extralaterally as that of the top or apex thereof included within the boundaries of his location; and that it is the duty of the courts, if possible, to put such a construction upon the act as will give effect to this intention.

To assert that the locator must place his claim along the course of the vein at his peril is in many cases to compel him to perform the impossible, especially with claims as narrow as those here involved. *Consolidated Wyoming Gold Mining Co.* v. *Champion Mining Co.*, 63 Fed. Rep. 540, 548. To contend that the mining statutes are violated by locating across the apex of the vein is to virtually ignore all of the side-end-lines cases and nullify the repeated holding of this court that the lines crossed by the

apex of the vein become the true end lines under such circumstances.

From the issuance of the patent a conclusive presumption arises that prior to final entry a valid location of the claim, based upon a discovered vein, had been made. When many years thereafter it is made to appear that there is but one vein or lode, the top or apex of which is found within the boundaries of the claim, and this vein, instead of being lengthwise, is crosswise of the claim, the only legitimate conclusion, it would seem, would be that this was the discovery vein, that the course thereof had been mistaken by the locator; and his right to follow the same extralaterally between planes drawn through the located side lines should be upheld.

Under the logic of the decision in *Jim Butler Tonopah Mining Co.* v. *West End Consolidated Mining Co.*, 247 U. S. 450, we have extralateral rights upon the Crescent fissure vein even if it be true, which we do not concede, that it must be presumed that there is in each claim a vein or lode running parallel to its side lines. As we interpret that case, it definitely and positively disposes of the contention that the locator has less rights upon what has been called incidental veins than he has upon the so-called discovery vein.

MR. JUSTICE HOLMES delivered the opinion of the court.

This is a suit brought by the respondent to establish its right to a large body of ore found within the lines of the respondent's patent as it construed that document. The main contest concerned the southwesterly 135.5 feet of the patent as laid out by courses and distances, from which was taken the main body of the ore. At the argument the petitioner's statement was that "practically all the ore in controversy was taken from within this 135.5 foot strip."

The decision with regard to that strip was in favor of the petitioner and as it seemed possible that the respondent would not be able to establish that any appreciable amount of ore was taken from the land belonging to it, and that it might not care to attempt the proof, the questions raised with regard to such ore if any were left undecided according to the usual practice. But the respondent points out that the petitioner has admitted that a small amount of ore, not exceeding $20,047.50 in value, did come from the respondent's land and presses for a decision concerning its right to that. The motion is put in the form of a petition for rehearing; but the main thing asked and the only thing for which we see any reason is that we decide the questions argued, but left open by us. That we proceed to do. Nothing that has been decided will be reopened, but leave to file the petition is granted to that single end.

It is not disputed by the respondent, the Conkling Mining Company, that a fissure on its strike crosses the parallel side lines of the petitioner's claims and on its dip passes beneath the Conkling mining claim in the immediate vicinity of the ore body in dispute and between vertical planes drawn through the parallel side lines of the petitioner's claims and continued in their own direction. What is disputed is that this ore body is any part of the vein referred to, known as the Crescent Fissure, and that, if it is, the petitioner has any right to treat the end lines of its claims as side lines and to pursue the vein under ground beyond the vertical planes drawn through those lines.

We take up the last question first. The typical case supposed by Rev. Stats., § 2322 is that of a claim laid out lengthwise along the strike of a vein. In that case the end lines of the location will limit the extralateral right. But that case is only the simplest illustration of a principle. The general purpose is to give a right to all of the vein

included in the surface lines, if there is only one, provided the apex is within the location. It often must happen that the strike of the vein is not known but must be conjectured at the time of discovery, and that the location is across instead of along the vein. This has been obvious always and therefore it would be wrong to interpret the words "end lines" narrowly, as meaning the shorter ones in every instance. Those are the end lines that cut across the strike of the vein if it crosses the location. We see no sufficient reason for thinking that because the discoverer has not claimed as long a portion of the strike as he might have, he should be deprived of even his diminished lateral rights. It has been the accepted opinion of this Court for many years that where as here the strike of the vein crosses the location at right angles its dip may be followed extralaterally, whatever the direction in which the length of the location may run. If across the strike as here, the side lines, as it commonly is expressed, become the end lines. Subsequent locators know as well as the original ones that the determining fact is the direction of the strike not the first discoverer's guess. *Flagstaff Silver Mining Co.* v. *Tarbet*, 98 U. S. 463. *King* v. *Amy & Silversmith Mining Co.*, 152 U. S. 222, 228. *Del Monte Mining & Milling Co.* v. *Last Chance Mining & Milling Co.*, 171 U. S. 55, 90, 91. *Jim Butler Tonopah Mining Co.* v. *West End Consolidated Mining Co.*, 247 U. S. 450, 453.

But it is said that when the end lines are determined they are end lines for all purposes even if there are different veins running in different directions having their apexes within the claim. *Walrath* v. *Champion Mining Co.*, 171 U. S. 293. And it is argued that there is a presumption that has not been overcome that there was a discovery vein running parallel with the side lines; that this determined the end lines and that therefore the petitioner got no extralateral rights in the Crescent Fissure. The Cir-

cuit Court of Appeals, approaching the petitioner's claim as a claim of an exceptional privilege, seems to have attached a weightier burden of proof to it than we are disposed to do. They were not satisfied that the discovery vein which determined what the end lines should be was not some other vein than the Crescent Fissure. But we see no substantial evidence that there was another vein. We have the distinct testimony of experts that there was no such and we agree with the view of the District Judge sustaining the petitioner's extralateral rights. Whether there are other answers to the contention we need not decide. See *Jim Butler Tonopah Mining Co.* v. *West End Consolidated Mining Co.*, 247 U. S. 450, 454, *et seq.*

It is urged that, if the end lines be taken as the side lines, then the discovery shafts being four hundred feet distant from the apex of the Crescent Fissure left either the vein or the discovery outside the location with the side lines limited as they should be. But at that time there was no requirement making a discovery shaft essential to a valid location. And in any event our conclusion being that the petitioner must be presumed to have discovered the Crescent Fissure, however it may have been done, the distance of the shafts does not affect the case.

The only question that remains is whether the ore within the respondent's lines formed part of the Crescent Fissure vein. The Circuit Court of Appeals in view of its opinion upon the last point made no decision upon this. But the experienced District Judge after careful consideration was of the opinion that the ore belonged to the vein. We see nothing to convince us that he was wrong. The position of the respondent is that the ore in controversy is a distinct bedded deposit. But as the District Judge remarks, similar deposits are found at many different horizons, connected with the fissure and similar in composition to the ore in the fissure. The deposit in question was like the others. Whether we consider merely the

practical fact of the continuously occurring deposits along the course of the vein or the theory of their origin which seems to us the most probable, we believe the District Judge to have been right.

Decree of Circuit Court of Appeals reversed.
Decree of District Court affirmed.

STATE OF ARKANSAS *v.* STATE OF MISSISSIPPI.

IN EQUITY.

No. 6, Original. Motion for confirmation of report of commissioners and suggestions in support of same submitted February 28, 1921.—Final decree entered Apirl 11, 1921.

Decree reciting report of the commissioners heretofore appointed to run, locate and mark the boundary between Arkansas and Mississippi involved in this case; overruling the exceptions thereto filed by Mississippi; confirming the report; establishing the boundary as set forth by the said report and upon the map accompanying the same; and allowing the expenses and compensation of the said commissioners as part of the costs of this suit to be borne equally by the parties, etc.

Mr. J. S. Utley, Mr. John M. Moore and *Mr. Herbert Pope* for complainant.

Mr. Marcellus Green, Mr. Gerald Fitzgerald and *Mr. Garner W. Green* for defendant.

By the Court: [1]

The State of Arkansas, having moved the court to take up for consideration the exceptions filed by the State

[1] Announced by Mr. Justice Day.

of Mississippi to the report of the Commissioners appointed by the decree in this cause on the twenty-second day of March, 1920, (252 U. S. 344) to run, locate, and permanently mark the boundary line between the States of Arkansas and Mississippi; and the State of Mississippi, having filed certain exceptions to said report, which report is in the words and figures following, to wit:

"*To the Honorable Chief Justice and the Associate Justices of the Supreme Court of the United States:*

We, Samuel S. Gannett, Washington, D. C.; Charles H. Miller, Little Rock, Arkansas, and Stevenson Archer, Jr., Greenville, Mississippi, Commissioners appointed under the decree of the court, rendered March 22, 1920, 'to run, locate and designate the boundary line between said States along that portion of said river which ceased to be a part of the main navigable channel of said river as the result of said avulsion, in accordance with the above principles: Commencing at a point in said Mississippi River about one mile southwest from Friar Point, Coahoma County, Mississippi, where the main navigable channel of said river, prior to said avulsion, turned and flowed in a southerly direction, and thence following along the middle of the former main channel of navigation by its several courses and windings to the end of said portion of said Mississippi River which ceased to be a part of the main channel of navigation of said river as the result of said avulsion of 1848,' have the honor to submit the following report, which report is accompanied by a map entitled:

Supreme Court of the United States, October Term, 1919. No. 7, Original. Map Showing Boundary Line Between States of Arkansas and Mississippi Below Friar Point, Mississippi.

On account of a continuous high stage in the Mississippi River it was impracticable to carry on any field-work previous to August 1, 1920, but in the meantime the

record was read, local data and maps were examined, and preliminary investigations made in the field.

The Commissioners met at Friar Point, Mississippi, August 4, 1920, and proceeded to view the ground and formulate a plan of procedure.

The determination of the boundary line proceeded upon the finding of the law as laid down by the court, namely, that if the former channel of a river separating two States ceases to be navigable by reason of an avulsion, it does not render inapplicable the rule which fixes as the boundary line the middle of the navigable channel rather than the middle line between the banks (State of Arkansas *vs.* State of Tennessee, 246 U. S., page 158, sec. 4).

After a study of all the evidence in the case and a careful examination of the physical facts on the ground at this time, the Commissioners are unanimously of the opinion that 'Horseshoe Lake' or 'Old River' or 'Pecan Lake' was, at the time the avulsion or cut-off took place, the main navigable channel of the Mississippi River, and therefore this portion of the boundary line should follow in general the deepest water in this lake.

Leaving the west or lower end of Horseshoe Lake, the boundary line as determined by your Commissioners follows, in general, the course of the present 'channel' or well-defined chute which runs in a northeasterly direction to the Mississippi River, because the evidence on the ground (namely, well-defined high banks on both sides for practically the entire distance, both of which are covered with timber of about the same age; its location west of the meander line of 1833 near the 'Horseshoe Lake' where caving would be expected, and its location east of the meander line of 1833 at a point farther north where accretion would be expected) clearly indicates that this was the last channel actually navigated by the steamboats that entered the 'Horseshoe Lake' several years after the avulsion or cut-off of 1848.

In arriving at the proper location for the line between the northeast end of 'Horseshoe Lake' and the Mississippi River at a point about one mile southwest from Friar Point, we considered the following facts and conditions:

(*a*) The Arkansas shore, being in a concave bend, would naturally undergo some caving or recession during the 32 years between the date of the original land survey (1816) and the date of the cut-off (1848).

(*b*) The 'slough' immediately east of the field in sections 10 and 15, township 4 south, range 4 east, being totally devoid of short and irregular bends and following a generally uniform curve of radius similar to that of the original river in this vicinity, was, without doubt, formed by the main river, and the great difference in the age of the timber on the west bank as compared with the age of that on the east bank shows that the west bank of this 'slough' marked the most westerly limit of the main river at the time of the avulsion.

(*c*) The Mississippi land survey of 1835 shows that an island existed at that time near to the Mississippi shore or meander line; evidence on the ground today shows conclusively that this portion of the area is much older than is that part which lies farther to the west. The conformation of the old bank lines is such that accretion to the Mississippi shore in this vicinity is a logical sequence.

We have therefore decided that this line after leaving the northeast end of 'Horseshoe Lake' should gradually swing over towards the northwest and follow the general line of the 'slough,' but in front, or east, of the same, a distance which is approximately equal to that which is ordinarily found between the main bank and the line of deepest water in the Mississippi River.

After reaching a point which is opposite the upper end of this 'slough' we must, in order to reach the present river, cross over, for a distance of approximately a mile, land that has evidently been formed by the process of

accretion since the time of the avulsion, and hence the boundary line should be brought east, as soon as is practicable, to a point about midway between the old original meander lines, and thence along this mid-line to the Mississippi River.

Commencing at a point in said Mississippi River, approximate latitude 34° 22′ 18″, longitude 90° 39′ 19″, about one mile west from Friar Point, we herewith specifically describe the boundary line as follows:

S. 30° W. 6,831 feet, or 103.50 chains, to monument (1).
S. 0° W. 2,587 feet, or 39.20 chains, to monument (2).
S. 23° E. 5,035 feet, or 76.29 chains, to monument (3).
S. 11½° E. 4,927 feet, or 74.65 chains.
S. 25° W. 2,805 feet, or 42.50 chains.
S. 70¼° W. 2,607 feet, or 39.50 chains.
N. 88½° W. 2,290 feet, or 34.70 chains.
N. 68¼° W. 2,607 feet, or 39.50 chains.
N. 51° W. 1,571 feet, or 23.80 chains.
N. 34° W. 1,733 feet, or 26.25 chains.
N. 4° W. 2,676 feet, or 40.55 chains.
N. 12¼° E. 3,383 feet, or 51.25 chains.
N. 31½° E. 3,317 feet, or 50.25 chains.
N. 22¼° E. 2,864 feet, or 43.40 chains.
N. 15° E. 5,148 feet, or 78.00 chains to a point in the Mississippi River, approximate latitude 34° 22′ 04″, longitude 90° 40′ 35″.

Monuments.

Monuments have been set as follows:

State Line Monument No. 1.

Situated in southeast quarter of Sec. 10, T. 4 S., R. 4 E., 600 feet east of west bank of slough and on north side of road through timber-reinforced concrete post 12 inches square, 36 inches high, set on a concrete base 24 by 24 by 24 inches.

Monument marked on west side ARK, on east side MISS, on north side 1920, on south side No. 1.

State Line Monument No. 2.

Situated 2,587 feet due south of State line Mon. No. 1 and is in the N. E. ¼ Sec. 15, T. 4 S., R. 4 E. A reinforced concrete post 12 inches square, 36 inches high, set on a concrete base 24 by 24 by 24 inches.

The monument is marked on west side ARK, on east side MISS, on north side 1920, on south side No. 2.

State Line Monument No. 3.

Situated 5,035 feet S. 23° E. from Monument No. 2 and 2,375 feet west of a point 100 feet south of levee mile post 72-73. It is in north part of Sec. 23, T. 4 S., R. 4 E., a few feet south of line of Sec. 14, T. 4 S., R. 4 E. It is a reinforced concrete post 12 inches square, 36 inches high, set on a concrete base 24 by 24 by 24 inches.

This monument is marked on west side ARK, on east side MISS, on north side 1920, on south side No. 3.

Witness trees: Cottonwood 24 inches diameter bears N. 56° E. 47 feet distant; hackberry 3 inches diameter bears N. 46° E. 6 feet distant. Overcup oak 10 inches diameter bears N. 65° ½ W. 38.5 feet distant.

Reference Point No. 1.

1,025 feet north of corner of Secs. 7 and 18, T. 28 N., R. 4 W., and Secs. 12 and 13, T. 28 N., R. 5 W.

Reinforced concrete post 12 inches square, 36 inches high, set on concrete base 24 by 24 by 24 inches.

Monument is marked on north side REF. PT. No. 1, on south side 1920.

From this monument middle of old River or Horse Shoe Lake or State line bears N. 40° W. 1,353 feet.

Reference Point No. 2.

At ¼ corner between Secs. 10 and 11, T. 28 N., R. 5 W.

Reinforced concrete post 12 inches square, 36 inches high, set on concrete base 24 by 24 by 24 inches.

Monument marked on north side REF. PT. No. 2, on south side 1920.

Witness trees: Cottonwood, 14 inch diameter, N. 42°

E. 78.6 feet; cottonwood, 24 inch diameter, S. 66° ¼ W. 33.1 feet.

From this monument middle of old River or Horse Shoe Lake or State line bears N. 67° ¾ E. 1,353 feet.

Reference Point No. 3.

At corner of Secs. 2, 3, 34 and 35, Tps. 28 and 29 N., R. 5 W.

Iron post 6 feet long, 2 inches in diameter, set 3 feet in ground.

Witness trees: A sycamore 18 inches diameter bears N. 23° W. 18.3 feet distant; a boxelder 12 inches diameter bears S. 83° ¾ W. 23.2 feet distant.

From this reference point or monument the State line or middle of channel or Horse Shoe Lake is 808 feet due east.

We return herewith a financial statement showing in detail the money actually expended by the Commissioners for running, locating, and designating the boundary line under the decree in this case, including the per diem compensation of the Commissioners.

Respectfully submitted,

SAMUEL S. GANNETT,
CHAS. H. MILLER,
STEVENSON ARCHER, JR.,
Commissioners."

The cause coming on to be heard upon said motion of the State of Arkansas, and exceptions of the State of Mississippi, it is ordered, adjudged, and decreed that the exceptions filed on behalf of the State of Mississippi be and the same are hereby overruled, and said report is in all respects confirmed.

It is further ordered, adjudged, and decreed that the line as delineated and set forth in said report, and upon the map accompanying the same, which line has been marked by permanent monuments, as stated in said

report, be and the same is hereby established, declared and decreed to be the true boundary line between the States of Arkansas and Mississippi, and said map is directed to be filed as a part of this decree. And it appearing that the expenses and compensation of the Commissioners attendant upon the discharge of their duties, amount to $6,116.45, it is ordered that the same be allowed and approved as a part of the costs of this suit to be borne equally by the parties. And it appearing further from the report that the State of Arkansas has paid said sum, it is hereby ordered that it be credited to the State of Arkansas in the settlement of the costs of this suit between the States of Arkansas and Mississippi. It is further ordered that the Clerk of this Court do transmit to the respective Governors of the States of Arkansas and Mississippi copies of this decree, duly authenticated, and under the Seal of this Court, omitting from said copies the map filed with the report.

THE BALDWIN COMPANY ET AL. v. R. S. HOWARD COMPANY.

THE BALDWIN COMPANY v. R. S. HOWARD COMPANY.

APPEAL FROM AND ON PETITION FOR A WRIT OF CERTIORARI TO THE COURT OF APPEALS OF THE DISTRICT OF COLUMBIA.

Nos. 139 and 113. Argued January 14, 1921.—Decided April 11, 1921.

1. A decision made by the Court of Appeals of the District of Columbia upon an appeal from the Commissioner of Patents under § 9 of the Trade-Mark Act of February 20, 1905, is not reviewable in this court by appeal or certiorari under §§ 250, 251, of the Judicial Code,

since such decisions are merely certified to the Commissioner to govern his further proceedings in the case, as in patent matters (Rev. Stats., § 4914), and are not, therefore, final judgments. P. 38.

2. Assumption of jurisdiction by this court in a case where no question of jurisdiction was raised or considered, does not establish its jurisdiction over that class of cases. P. 40.

Appeal to review 48 App. D. C. 437, dismissed; petition for a writ of certiorari denied.

THE case is stated in the opinion.

Mr. Lawrence Maxwell, with whom *Mr. John E. Cross* was on the briefs, for appellants and petitioner.

Mr. Samuel S. Watson for appellee and respondent.

MR. JUSTICE DAY delivered the opinion of the court.

No. 139 is here upon an appeal from a decision of the Court of Appeals of the District of Columbia reversing the decision of the Commissioner of Patents.

No. 113 is an application for a writ of certiorari to review the same decision of the Court of Appeals of the District of Columbia. The case is reported in 48 App. D. C. 437.

The Commissioner of Patents refused to cancel the certificates of registration of a trade-mark consisting of the word "Howard" registered by the Baldwin Company, October 17, 1905, and made a like ruling refusing to cancel the certificate of registration of the word "Howard" arranged in monogram with the initials "V. G. P. Co." registered March 8, 1898, which marks were registered as trade-marks for pianos. The appeals were heard together in the District Court of Appeals upon the appeal of the Howard Company.

Proceedings were brought in the Patent Office by the Howard Company against the Baldwin Company to

cancel the certificates of registration. It appears that a suit was begun in the District Court of the United States for the Southern District of New York by the Baldwin Company against the Howard Company while the cancellation proceedings were pending, which resulted in a decree in favor of the Baldwin Company restraining the Howard Company from making or selling pianos bearing the word "Howard," but permitting it to use the marks "R. S. Howard Company" and "Robert S. Howard Company." 233 Fed. Rep. 439. This decree was affirmed by the Circuit Court of Appeals for the Second Circuit. 238 Fed. Rep. 154.

The Baldwin Company filed in the Patent Office a certified copy of the record in the federal courts in New York, and in the Patent Office the Examiner of Interferences and the Commissioner of Patents, on appeal to him, held that the adjudication in the New York courts was a bar to the claim of the R. S. Howard Company to cancel the certificates of registration of the trade-mark "Howard," and dismissed the petition of the Howard Company; thereupon, appeal was taken from the decision of the Commissioner to the Court of Appeals of the District. That court reversed the decision of the Commissioner of Patents, and directed the clerk to certify its decision as required by law.

The application in the Patent Office to cancel the trade-marks was under § 13 of the Trade-Mark Act of February 20, 1905, c. 592, 33 Stat. 728, which provides:

"SEC. 13. That whenever any person shall deem himself injured by the registration of a trade-mark in the Patent Office he may at any time apply to the Commissioner of Patents to cancel the registration thereof. The Commissioner shall refer such application to the examiner in charge of interferences, who is empowered to hear and determine this question and who shall give notice thereof to the registrant. If it appear after a hearing before the

examiner that the registrant was not entitled to the use of the mark at the date of his application for registration thereof, or that the mark is not used by the registrant, or has been abandoned, and the examiner shall so decide, the Commissioner shall cancel the registration. Appeal may be taken to the Commissioner in person from the decision of examiner of interferences."

The appeal from the decision of the Commissioner to the Court of Appeals of the District was under § 9 of the act, which provides: "SEC. 9. That if an applicant for registration of a trade-mark, or a party to an interference as to a trade-mark, or a party who has filed opposition to the registration of a trade-mark, or party to an application for the cancellation of the registration of a trade-mark, is dissatisfied with the decision of the Commissioner of Patents, he may appeal to the court of appeals of the District of Columbia, on complying with the conditions required in case of an appeal from the decision of the Commissioner by an applicant for patent, or a party to an interference as to an invention, and the same rules of practice and procedure shall govern in every stage of such proceedings, as far as the same may be applicable."

A motion is made to dismiss the appeal. No specific provision is made for an appeal from the decision of the District of Columbia Court of Appeals reviewing the decision of the Commissioner of Patents, but the decision is to be certified to the Commissioner to govern further proceedings in the case. Section 4914, Rev. Stats.; 8 U. S. Comp. Stats., § 9459.

If the decision of the Court of Appeals of the District of Columbia is not final, then the motion to dismiss the appeal should be sustained, and we have no authority to grant a writ of certiorari. Judicial Code, §§ 250, 251.

The nature of proceedings of the character now under consideration was considered in *Frasch* v. *Moore*, 211 U. S. 1, in which the opinion of Chief Justice Alvey, speaking

for the Court of Appeals of the District of Columbia in *Rousseau* v. *Brown*, 21 App. D. C. 73, 80, explaining the nature of this statutory proceeding and affirming that it did not authorize a judgment but only the return by the Court of Appeals of a certificate to the Commissioner of Patents, to be there entered of record to govern further proceedings in the case, was fully approved.

In *Atkins & Co.* v. *Moore*, 212 U. S. 285, application for registration of a trade-mark was refused by the Examiner, which action was approved by the Commissioner, and affirmed on appeal by the Court of Appeals of the District of Columbia, an appeal and writ of error were allowed, both of which were dismissed in this court. The previous decisions of this court were reviewed by Chief Justice Fuller, speaking for the court, and in concluding the opinion he said: "In the light of the various details of the Act of February 20, 1905, and of the specific provisions of § 9, we were of opinion [*Gaines* v. *Knecht*, 212 U. S. 561] that proceedings under the act were governed by the same rules of practice and procedure as in the instance of patents, and the writ of error was accordingly dismissed. The same result must follow in the present case. Under § 4914 of the Revised Statutes no opinion or decision of the Court of Appeals on appeal from the Commissioner precludes 'any person interested from the right to contest the validity of such patent in any court wherein the same may be called in question,' and by § 4915 a remedy by bill in equity is given where a patent is refused, and we regard these provisions as applicable in trade-mark cases under § 9 of the Act of February 20, 1905."

We are of opinion that the principle there announced controls this case. No provision is made which permits this statutory proceeding to be carried beyond the decision of the Court of Appeals of the District of Columbia, the decision of which court is directed to be certified to the Commissioner of Patents. It is in no sense a final

judgment reviewable here upon writ of certiorari or appeal.

It is true that in *Estate of Beckwith* v. *Commissioner of Patents*, 252 U. S. 538, this court allowed a writ of certiorari from a decision of the Court of Appeals of the District of Columbia, affirming a decision of the Commissioner of Patents, in an application to register a trade-mark. No question of the jurisdiction of the court was considered in that case, and an inadvertent allowance of the writ of certiorari does not establish the jurisdiction of the court. *Fritch, Inc.* v. *United States*, 248 U. S. 458, 463.

It follows that the appeal must be dismissed, and the petition for a writ of certiorari denied.

So ordered.

AMERICAN STEEL FOUNDRIES *v.* WHITEHEAD, COMMISSIONER OF PATENTS.

CERTIORARI TO THE COURT OF APPEALS OF THE DISTRICT OF COLUMBIA.

No. 131. Argued January 12, 13, 1921.—Decided April 11, 1921.

Decided on the authority of *Baldwin Co.* v. *Howard Co.*, *ante*, 35.

Writ of certiorari to review 49 App. D. C. 16; 258 Fed. Rep. 160, dismissed.

THE case is stated in the opinion.

Mr. George L. Wilkinson for petitioner.

The Solicitor General and *Mr. Assistant Attorney General Davis*, on behalf of respondent, submitted the case without brief or argument.

Mr. Nathan Heard for Simplex Electric Heating Company, by special leave of court.

MR. JUSTICE DAY delivered the opinion of the court.

In this case a writ of certiorari was granted by this court on October 13, 1919. 250 U. S. 655. The case involves an application for the registration of a trademark, which was refused by the Examiner in the Patent Office, which decision was affirmed by the Commissioner of Patents and his decision was affirmed by the Court of Appeals of the District of Columbia. 49 App. D. C. 16. This case is ruled by Nos. 139 and 113, just decided, *ante*, 35. As the writ of certiorari in this case, for the reasons stated in the opinion in No. 139, was improvidently granted, it follows that the cause must be dismissed for want of jurisdiction, and it is

So ordered.

STATE OF MINNESOTA ON THE RELATION OF WHIPPLE v. MARTINSON, SHERIFF OF HENNEPIN COUNTY, MINNESOTA.

ERROR TO THE SUPREME COURT OF THE STATE OF MINNESOTA.

No. 224. Argued March 17, 1921.—Decided April 11, 1921.

1. Minnesota Laws, 1915, c. 260, regulating the administration, sale and possession of morphine and other narcotic drugs, *held* consistent with the Fourteenth Amendment. P. 45.
2. The presence in the law of a provision interpreted by the state courts as forbidding physicians to furnish these drugs to drug-addicts otherwise than through prescriptions does not bring it into

conflict with the federal "Anti-Narcotic" Revenue Act, not containing such restriction, since it does not prevent enforcement of the federal act. P. 45.

144 Minnesota, 206, affirmed.

WRIT of error to review a judgment of the Supreme Court of Minnesota, which affirmed an order of a trial court of the State discharging a writ of *habeas corpus* sued out by the relator, Whipple, for the purpose of testing the validity of his sentence for violation of the state law concerning hypnotic drugs. The facts are stated in the opinion.

Mr. Thomas E. Latimer for plaintiff in error:

The purpose of the Harrison Narcotic Act is to regulate the sale and distribution of narcotic drugs and limit the dispensing of them to the general public to two means: By and through physicians. This enables the federal authorities to limit the use of these drugs to *bona fide* treatments of the sick, either to relieve pain or to cure those addicted to the use of one or more of these drugs. By limiting the physicians to the practice of their profession only, Congress has taken full control of the sale and disposition of these drugs and their disposal by physicians. There is no phase of this question left for state legislation, since Congress has made provision for the whole field of narcotic sale and disposal from the importation to the placing in the hands of the user and has developed an elaborate system for enforcing the same.

Chapter 260, Laws, 1915, in so far as it conflicts with the Harrison Act, is void, and especially is this true of § 2 of said state law wherein it is provided that a physician may not treat a patient in accordance with the practice of his profession if that patient be a drug addict.

The enforcement of this provision of the state law would come in conflict with the enforcement of the Harrison Narcotic Act and would militate against its successful

operation, in that it would prevent proper treatment of addicts by the gradual reduction method, in that if only written prescriptions can be used the patient can no longer be kept in ignorance of the quantity of the drug he is consuming each day, and one of the essential elements of the treatment is eliminated; and, further, where only written prescriptions can be used, the addict can raise the amount stated upon the prescription and thus overcome the treatment being given by the physician in order to effect a cure.

Mr. James E. Markham, Assistant Attorney General of the State of Minnesota, with whom *Mr. Clifford L. Hilton*, Attorney General of the State of Minnesota, was on the brief, for defendant in error.

MR. JUSTICE DAY delivered the opinion of the court.

The relator was convicted of a violation of a statute of the State of Minnesota providing against the evils resulting from traffic in certain habit-forming narcotic drugs, and regulating the administration, sale, and possession thereof. Laws of Minn. 1915, c. 260.

The Minnesota statute in § 1 forbids the sale of morphine and certain other narcotic drugs, with the provision that licensed pharmacists may fill orders for the same to a consumer pursuant to the written prescription of a physician, which must be dated on the day on which it is signed, and bear the signature and address of the physician, and the name of the person for whose use it is intended. It must be serially numbered, dated and filed in the prescription file of the compounder, and retained there for two years open for inspection by the authorities. Prescriptions may be filled but once, and no copy may be given except to an officer of the law, and the drug must be delivered in a container labeled with the serial number of

the prescription, with the date when filled and the name of the person for whose use the medicine is intended, the name of the physician and the name and address of the dispenser. The administration, sale, or disposal of the drugs by a legally licensed physician is permitted when made to a patient on whom he is in professional attendance. The physician must subscribe the name and address of the patient, the date of the sale or disposal, and the amount of the drug transferred, which must be delivered in a container labeled as required by the statute.

Section 2 provides: "It shall be unlawful for any physician or dentist to furnish to or prescribe for the use of any habitual user of the same any of the substances enumerated in Section 1 of this act; provided that the provisions of this section shall not be construed to prevent any legally licensed physician from prescribing in good faith for the use of any patient under his care, for the treatment of a drug habit such substances as he may deem necessary for such treatment; provided that such prescriptions are given in good faith for the treatment of such habit."

The trial court construed this section of the statute as making it unlawful for a physician to furnish the drugs to habitual users out of stocks kept on hand by himself. And such was the offence of which the relator was convicted.

This construction of the section, and the conviction and sentence were sustained by the Supreme Court of Minnesota. 143 Minnesota, 403. Thereupon the relator sued out a writ of habeas corpus in the District Court of Hennepin County, Minnesota, which writ was discharged, and the order was affirmed on appeal to the Supreme Court of Minnesota. 144 Minnesota, 206. The case was then brought here to review this judgment of the state court upon writ of error.

The grounds of attack upon the statute are based upon

an alleged deprivation of federal rights, it being contended: First, that the statute exceeds the authority of the State in the exertion of its police power in that it undertakes to regulate a lawful business in the manner prescribed in the statute, in violation of the Fourteenth Amendment. Second, that the statute conflicts with the terms and provisions of the federal Harrison Anti-Narcotic Drug Act, 38 Stat. 785, and is therefore beyond the power of the State to enact.

There can be no question of the authority of the State in the exercise of its police power to regulate the administration, sale, prescription and use of dangerous and habit-forming drugs, such as are named in the statute. The right to exercise this power is so manifest in the interest of the public health and welfare, that it is unnecessary to enter upon a discussion of it beyond saying that it is too firmly established to be successfully called in question.

As to the alleged inconsistency between the state statute and the Harrison Anti-Narcotic Drug Act, the state court held that there was no substantial conflict between the two enactments. The validity of the Harrison Act was sustained by this court in *United States* v. *Doremus*, 249 U. S. 86, as a valid exercise of the authority of Congress under the power conferred by the Constitution to levy excise taxes. The provisions of the statute regulating the sale, dispensing or prescribing of drugs were held to bear a reasonable relation to the collection of the taxes provided for, and to be valid although the statute affected the conduct of a business which was subject to regulation by the police power of the State.

It may be granted that the State has no power to enact laws which will render nugatory a law of Congress enacted to collect revenue under authority of constitutional enactments. (See *Savage* v. *Jones*, 225 U. S. 501; *McDermott* v. *Wisconsin*, 228 U. S. 115.) But we agree with the state

court that there is nothing in this statute which prevents enforcement of the revenue act in question. It is true that the provisions regulating the sale, dispensation, and disposition of the prohibited drugs are somewhat different in the two acts. The prohibitory measures of the federal statute do not apply to the disposition and dispensation of drugs by physicians registered under the act in the regular course of professional practice provided records are kept for official inspection. Under the state law physicians can only furnish prescriptions to addicts, and may not dispense the drugs to such persons at pleasure from stocks of their own.

There is certainly nothing in this state enactment, as construed by the Supreme Court of Minnesota, which interferes with the enforcement of the federal revenue law, and we agree with the state court that there is no conflict between the enactments such as will prevent the State from enforcing its own law upon the subject.

It follows that the judgment of the Supreme Court of Minnesota must be

Affirmed.

GALBRAITH *v.* VALLELY, TRUSTEE IN BANKRUPTCY OF REISWIG, BANKRUPT.

CERTIORARI TO THE CIRCUIT COURT OF APPEALS FOR THE EIGHTH CIRCUIT.

No. 234. Argued March 18, 1921.—Decided April 11, 1921.

An assignee for the benefit of creditors turned over the assets to a trustee appointed in a later bankruptcy proceeding, less certain amounts which he claimed as compensation for services rendered and disbursements made, as assignee, before the bankruptcy adjudi-

cation. *Held*, that his claim was an adverse claim which the District Court was without jurisdiction to dispose of summarily in the bankruptcy proceedings over his objection. P. 48. *Louisville Trust Co.* v. *Comingor*, 184 U. S. 18.

261 Fed. Rep. 670, reversed.

THE case is stated in the opinion.

Mr. Fred B. Dodge, with whom *Mr. Kay Todd*, *Mr. Walter Fosnes* and *Mr. Charles W. Sterling* were on the brief, for petitioner.

No appearance for respondent.

MR. JUSTICE DAY delivered the opinion of the court.

This is a writ of certiorari to review a decision of the Circuit Court of Appeals for the Eighth Circuit affirming an order of the District Judge for the District of North Dakota in a bankruptcy proceeding. The pertinent facts are: On August 15, 1917, one Conrad C. Reiswig executed a trust deed for the benefit of his creditors to John P. Galbraith, assignee and the petitioner herein. The assigned stock of merchandise was sold. Various proceedings and meetings of creditors were had, not necessary to recite. On December 22, 1917, upon the petition of creditors, Reiswig was duly adjudged a bankrupt, and Vallely, respondent herein, is his trustee in bankruptcy. Galbraith appeared in the bankruptcy proceedings and filed an account, claiming therein the right to retain a certain sum for fees and disbursements under the assignment; and paid over to the trustee in bankruptcy the other moneys which he had acquired. Thereupon the trustee in bankruptcy filed a petition with the referee in bankruptcy asking, in a summary proceeding, for an order upon Galbraith to show cause why he should not pay over the sum of $1,474.10, retained as fees and ex-

penses as trustee under the assignment. The referee in bankruptcy made an order that Galbraith forthwith pay over that sum to the trustee in bankruptcy or show cause why he should not do so. Galbraith appeared and set up that the order of the referee in the summary proceeding was without authority as he was an adverse claimant to the moneys referred to in the order, and that the court had no jurisdiction in a summary proceeding to hear and determine the questions involved. Without waiving objection, and subject to the right of Galbraith to assert his objection to the proceedings, testimony was taken concerning the money expended and retained by the assignee prior to the bankruptcy proceedings, for administering the estate. Among other things it was stipulated that, as to the particular money expended by the assignee, he was an adverse claimant. The referee delivered an opinion passing upon the amount of the expenditures and compensation, but held that Galbraith was an adverse claimant within the rule declared by this court in *Louisville Trust Co.* v. *Comingor*, 184 U. S. 18, and that, therefore, the bankruptcy court was without jurisdiction to proceed in a summary manner, and discharged the order. The decision of the referee was reversed by the District Judge. 253 Fed. Rep. 390. The Circuit Court of Appeals affirmed the order of the District Court, 261 Fed. Rep. 670, and the case is here upon writ of certiorari.

We think the referee was right in holding that the case was governed by *Louisville Trust Co.* v. *Comingor*, *supra*. In that case a general assignment for the benefit of creditors was made within four months of the bankruptcy proceeding; the assignment was therefore an act of bankruptcy. A receiver was appointed in the bankruptcy court. The assignee turned over the proceeds of sale of the property, retaining his fees as assignee and his disbursements to counsel. A summary proceeding was begun in the District Court ordering the assignee to show cause

why he should not pay to the receiver the amounts retained. This order was made against the objection of the assignee that the court had no authority to proceed in that manner. This court held that the assignee was an adverse claimant as to these amounts, and that the District Court was without jurisdiction to determine the controversy in a summary proceeding. This case has been repeatedly cited as determinative of the law and practice in similar cases.[1]

The Circuit Court of Appeals made no reference to the *Comingor Case* and held the case was ruled by *Randolph* v. *Scruggs*, 190 U. S. 533; but that case did not present the question here involved. In that case there had been an assignment prior to the bankruptcy proceedings, and the question presented was whether a claim for professional services rendered in the course of a general assignment before the bankruptcy was entitled to be paid as a preferential claim out of the estate in the hands of the trustee in bankruptcy when the adjudication of bankruptcy had been made within four months after the making of the assignment, and the assignment set aside as in contravention of the bankruptcy law. It was held that the claim for compensation could be allowed so far as the services were shown to be beneficial to the estate.

In *Babbitt* v. *Dutcher*, 216 U. S. 102, also cited in the opinion of the Circuit Court of Appeals, it was held that books and records of a corporation, upon adjudication in bankruptcy, passed to the trustee; and belonged in the custody of the bankruptcy court, there being no adverse claim to them. Upon that state of facts it was

[1] See full consideration of the subject by the Circuit Court of Appeals of the Eighth Circuit, Judges Sanborn, Van Devanter and Reed, in *In re Rathman*, 183 Fed. Rep. 913; Collier on Bankruptcy, 11th ed., 525, 528, and cases cited in notes; Black on Bankruptcy, 974; 2 Remington on Bankruptcy, 2nd ed., § 1612; 1st Loveland on Bankruptcy, 2nd ed., 129.

held that, on a rule to show cause, the court could properly make an order compelling the delivery of the books to the trustee. In the opinion in that case, *Louisville Trust Co.* v. *Comingor*, *supra*, and other cases are cited for the purpose of showing that a different rule would prevail when an adverse claimant set up a right to be heard in other than a summary proceeding.

It may be, as suggested by the Circuit Court of Appeals, that a summary proceeding at the instance of the trustee would afford a more speedy and economical administration of the estate in bankruptcy. But the right to recover in such instances, only in suits of the ordinary character, with the rights and remedies incident thereto, has been consistently maintained by this court. The principle of the *Comingor Case* has never been departed from in this court. It establishes the right of an assignee for the benefit of creditors, to the extent that he asserts rights to expenses incurred and compensation earned under an assignment in good faith before the bankruptcy proceedings, to have the merits of his claim determined in a judicial proceeding suitable to that purpose, and not by summary proceedings where punishment for contempt is the means of enforcing the order. We see no occasion to depart from this practice. There was no waiver by the assignee of his rights in this respect. He made no attempt to retain the body of the estate as against the trustee in bankruptcy. As to his disbursements and compensation while acting as assignee, he asserted an adverse claim. Under the settled rule of this court he could not be proceeded against summarily for such disbursements and compensation over his protest duly made against that method of procedure.

In our view the courts below erred in deciding otherwise, and the order of the Circuit Court of Appeals is, accordingly,

Reversed.

UNITED STATES v. NORTHERN PACIFIC RAILWAY COMPANY.

APPEAL FROM THE CIRCUIT COURT OF APPEALS FOR THE NINTH CIRCUIT.

No. 325. Argued October 7, 1920.—Decided April 11, 1921.

1. The Northern Pacific Railroad Act of July 2, 1864, c. 217, 13 Stat. 365, and the Joint Resolution of May 31, 1870, 16 Stat. 378, embodied a proposal that, if the company would bring about the construction and operation of the railroad, desired for the advantage of the Government and the public, it should receive in return the land comprehended by the granting provisions of the legislation. P. 63.
2. By the company's acceptance of this proposal, followed by construction and operation of the railroad and acceptance of the railroad by the President, the proposal was converted into a contract, entitling the company to performance by the Government. P. 64.
3. The provision relating to indemnity land was as much a part of the grant and contract as the one relating to land in place; and the right of the grantee to land within the indemnity limits in lieu of land lost within the place limits was intended to be a substantial right such as is protected by the due process clause of the Constitution. P. 64.
4. Assuming that the land applicable as indemnity remaining within the indemnity limits was not enough to make up for unsatisfied losses in the place limits, the Government could not deprive the company's successor of its right to such land by setting it aside for forest purposes. Pp. 64–66.
5. The rule that, under such a grant, no right of the railroad company to land within the indemnity limits attaches to any specific tract until the company has selected it, applies as between the company and settlers under the homestead and preëmption laws (the continued operation of which within the indemnity limits the granting act itself provides for), and applies also as between the company and the United States when the lands available for indemnity exceed the losses, but it has no application as between the company and the United States if the lands available for indemnity are insufficient for that purpose. P. 65.
6. The question whether lands remaining within the indemnity limits

were sufficient to satisfy losses in the place limits was primarily for the Land Department to decide. P. 67.

7. But, where the Department, without deciding this question, reserved part of the indemnity lands for forest purposes, and afterwards inadvertently issued a patent therefor to the railroad company upon its selection, *held*, that the question could be determined in a suit brought later by the Government against the company to set the patent aside, but only upon a clear showing of the facts, since the decision might conclude both parties as to other lands as well as those immediately involved. P. 67.

8. A report of the Commissioner of the General Land Office on the adjustment of a railroad land grant showing a deficiency is not enough to establish the existence of such deficiency, unless shown to have been approved or consented to by the Secretary of the Interior, since, under the adjustment Act of March 3, 1887, the supervision of the adjustment was specially devolved upon the Secretary. P. 67.

9. A stipulation that all the lands received by the Northern Pacific Company under its grant and all that it was possible for it to receive thereafter, whether as place or indemnity lands, did not equal the sum-total of all the odd-numbered sections within the primary or place limits, *held*, not enough to establish a deficiency, since the measure of the grant might be less than the aggregate of the odd-numbered sections within the place limits, due to partial overlapping with another like grant (*Southern Pacific R. R. Co.* v. *United States*, 183 U. S. 519), or to deductions under § 6 of the granting act if the route followed the general line of another railroad with a prior grant; and of the presence or absence of such conditions the courts could not take judicial notice. P. 68.

10. The existence of such a deficiency when the Government withdrew the lands in controversy is not established by a finding by the Secretary of the Interior that a deficiency existed six years later. P. 69.

264 Fed. Rep. 898, reversed.

THE case is stated in the opinion, *post*, 58.

Mr. Assistant Attorney General Nebeker, with whom *Mr. H. L. Underwood*, Special Assistant to the Attorney General, was on the brief, for the United States:

No rights to lands within the indemnity limits attach until an application to select is filed. *Ryan* v. *Railroad Co.*, 99 U. S. 382, 386; *St. Paul & Sioux City R. R. Co.* v.

Winona & St. Peter R. R. Co., 112 U. S. 720, 731; *Oregon & California R. R. Co.* v. *United States, No. 1*, 189 U. S. 103, 112, 113; *Osborn* v. *Froyseth*, 216 U. S. 571, 577, 578; *United States* v. *Southern Pacific R. R. Co.*, 223 U. S. 565, 570, 571.

As the lands involved were at the date of filing of the selection list already withdrawn for forestry purposes, they were not subject to selection. *United States* v. *Midwest Oil Co.*, 236 U. S. 459; Act of March 3, 1891, c. 561, § 24, 26 Stat. 1095, 1103; *Chicago, Milwaukee & St. Paul Ry. Co.* v. *United States*, 244 U. S. 351, 356. Hence there were no rights taken away by or in conflict with the withdrawal.

There is no obligation upon the part of the United States to preserve lands within indemnity limits for the benefit of the company. *Hewitt* v. *Schultz*, 180 U. S. 139; *Northern Pacific R. R. Co.* v. *Miller*, 7 L. D. 100, 120; *Northern Pacific R. R. Co.* v. *Davis*, 19 L. D. 87, 90. The entire contention of appellee in this regard ignores the vital point that the company secures no rights to lands within the indemnity limits until a filing is made. Until such a filing is made, there is less reason for saying that the Government cannot appropriate these lands for its own purposes than there is for saying that settlers cannot do so, and yet the right of settlers to acquire such lands at any time prior to the filing of the list is unquestionable. It would be unreasonable to assert that although the Government could reserve lands within the place limits prior to the time when the company's rights attached, yet it could not reserve lands within the indemnity limits prior to the time when the company's rights thereto were initiated. Rights in the place limits attached by the definite location of the road; in the indemnity limits by the filing of an application to select. Congress clearly recognized that there would be losses in the place limits, and therefore provided for indemnity, but there was no

promise that the indemnity would be sufficient or that all losses in the place limits would be compensated by the lands in the indemnity limits. *Wisconsin Central R. R. Co.* v. *Price County*, 133 U. S. 496, 512. The lands in the indemnity belt might, before the company's rights attached, be otherwise disposed of. They might all prove to be mineral. The company took the grant subject to these possibilities, and the same thing is true as to other appropriation. If the company feels that there is a moral obligation on the part of the Government to give it indemnity for all losses in the place limits, when the lands in the indemnity belt are not available because of previous appropriation, its appeal should be made to Congress. *Southern Pacific R. R. Co.* v. *Bell*, 183 U. S. 675, 689; *Humbird* v. *Avery*, 195 U. S. 480, 508.

Grants of this character are construed strictly against the grantee, and in the absence of a clearly expressed purpose to preserve the lands within indemnity limits for the company no such purpose should be presumed.

We do not consider the action of the company in filing blanket selections without assigning definite losses, or in applying for all the lands within the indemnity limits, to have strengthened its position. The requirement for approval of the selection lists by the Secretary of the Interior would be a vain thing if it were to be given to a list not supported by a definite showing of specific losses. The Land Department has required assignment of a definite base. Circular of August 4, 1885, 4 L. D. 90; *St. Paul, M. & M. Ry. Co.* v. *Munz*, 17 L. D. 288. As to applications for unsurveyed lands, those were clearly unacceptable and could not properly be made until the lands were identified by survey. This has been the rule of the Land Department. 27 L. D. 122.

The compilation of losses made by the Commissioner of the General Land Office and here adduced as proving that lands unappropriated were in the indemnity limits

and insufficient to satisfy losses in the place limits, has no material bearing on the issues here. Furthermore, it was not approved by the Secretary of the Interior. See *Hewitt* v. *Schultz*, 180 U. S. 139, 157, 158.

The failure of the Government to have the lands sooner surveyed, the inference being that thereby the company was prejudiced, is not material. *Oregon & California R. R. Co.* v. *United States, No. 2*, 189 U. S. 116, 118; *United States* v. *Missouri, Kansas & Texas Ry. Co.*, 141 U. S. 358, 374.

Mr. Charles Donnelly, with whom *Mr. Charles W. Bunn* was on the brief, for appellee:

The Act of 1864 and the Resolution of 1870 constituted a contract between the Government and the railroad company. *Burke* v. *Southern Pacific R. R. Co.*, 234 U. S. 669, 679.

The Northern Pacific Railroad Company performed its part of this contract by building its railroad. It has borne, and its successor, the Northern Pacific Railway Company, is now bearing, and must for all time continue to bear the burdens, in the way of restricted charges for government transportation, which, under § 11 of the Act of 1864, Congress has imposed. The question here is as to performance not of the railroad company's but of the Government's part of the contract.

It is equally clear that it was the intention of Congress that the grantee should get the full quantity of lands granted, at least so far as it was possible to get it within the limits of the grant. *Wisconsin Central R. R. Co.* v. *Forsythe*, 159 U. S. 46, 60; *Hewitt* v. *Schultz*, 180 U. S. 139, 157, 160; *Southern Pacific R. R. Co.* v. *Bell*, 183 U. S. 675, 689; *Oregon & California R. R. Co.* v. *United States, No. 1*, 189 U. S. 103, 115; *Humbird* v. *Avery*, 195 U. S. 480, 508. All these cases recognize the congressional intent to have been as stated in the *Forsythe Case, supra.*

Indeed, we do not understand counsel for the Government to question this; for while they argue that Congress did not "intend to guarantee any specific amount of land to the company," (and this of course is true) they speak of the "moral obligation" to indemnify the company for losses within the place limits as one to be discharged by Congress and not by the courts.

Without pausing to dwell on the reason why there is a deficiency in the grant to the Northern Pacific, the fact that there is one has long been known; and the question is whether this fact in any way affects the general rule governing the initiation of title to indemnity lands. Undoubtedly the general rule as to such lands is that until they are selected by the grantee the Government has complete control over them; but this rule rests upon an assumption that where one indemnity section is disposed of, another is available. The rule does not obtain where this assumption is shown to be unwarranted. *St. Paul & Pacific R. R. Co.* v. *Northern Pacific R. R. Co.*, 139 U. S. 1; *United States* v. *Southern Pacific R. R. Co.*, 146 U. S. 615, 616; *Southern Pacific R. R. Co.* v. *Bell*, 183 U. S. 675, 682; *Southern Pacific R. R. Co.* v. *Groeck*, 87 Fed. Rep. 970, 973.

That the fact of a recognized deficiency in the entire grant makes inapplicable the general rule that selection is necessary to the initiation of any rights in indemnity lands, is made strikingly plain by the decisions in *Hewitt* v. *Schultz, supra,* and *Oregon & California R. R. Co.* v. *United States, No. 1, supra.*

The question here is not whether in the face of the deficiency the settler may acquire rights superior to ours, for we concede that he may. It was a part of our contract that, until selected, lands within the indemnity belt should be open to settlement under the homestead and preëmption laws. The question is whether the Government may lawfully appropriate to its own uses lands

which are indispensable even to a partial fulfillment of its contract.

The answer of counsel for the Government to all this is direct and simple. They take their stand upon the broad general rule that until selection a railroad grantee acquires no title to indemnity lands. Undoubtedly this court has said this, or something like this, many times. But on examining the cases it will be found that wherever this is said, it is said *sub modo* and with reference to the special facts in hand. It has never been said or suggested that as to such lands the grant meant nothing, or that even though they were confessedly needed to supply losses within place limits, the Government, in advance of selection, was as free to deal with them as if the grant had not been made. *Weyerhaeuser* v. *Hoyt*, 219 U. S. 380, 387; *Daniels* v. *Wagner*, 205 Fed. Rep. 235, 237, reversed upon other grounds, 237 U. S. 547.

We are not contending for a principle which would deprive settlers of the right they now enjoy of acquiring title to odd-numbered sections within the indemnity belts; nor do we rest our case in any sense upon the fact that the Government has flagrantly failed to perform its obligation to survey the lands. We say that if it will not survey the lands as it agreed to do, if it will not allow us to select them while unsurveyed, if as a consequence we must suffer the losses occasioned by settlers' entries, we are entitled at least to protection against additional losses occasioned by its own acts. Its appropriation of these lands to its own purposes in the face of its admission that they are necessary to satisfy even partially the grant which it made for a consideration which we have rendered would be a plain violation of its contract. It would be a moral as well as a legal wrong; and surely it is not true that those who contract with the Government must expect to have their contracts dealt with so.

Bearing in mind that the withdrawal order was made

under the authority of § 24 of the Act of March 3, 1891, 26 Stat. 1095, authorizing the President to set apart "public lands" as forest reserves, we submit that one of two things must be true: Either the lands in question, in view of the admitted facts in this case, were not "public lands" within the meaning of that act, and therefore the withdrawal order was unauthorized and inoperative; or, they are "public lands," and then the act authorizing their withdrawal was a direct invasion of the constitutional rights which the railway company had in them; and such legislation cannot stand. *Sinking-Fund Cases*, 99 U. S. 700, 718.

MR. JUSTICE VAN DEVANTER delivered the opinion of the court.

This is a suit by the United States to cancel a patent issued to the railway company for 5,681.76 acres of land in Montana, the asserted ground for such relief being that the land officers issued the patent through inadvertence and mistake. The company prevailed in the District Court and in the Circuit Court of Appeals, 264 Fed. Rep. 898, and the United States brought the case here.

The lands in question are within the indemnity limits of the land grant made to the Northern Pacific Railroad Company by the Act of July 2, 1864, c. 217, 13 Stat. 365, as modified and supplemented by the joint resolution of May 31, 1870, 16 Stat. 378, and were selected and patented as indemnity for lands lost within the place limits. The rights and obligations of the original railroad company arising out of the grant have long since passed to the present railway company and there is no need here for distinguishing one company from the other.

The grant was made for the declared purpose of "aiding in the construction" of a proposed line of railroad from Lake Superior to Puget Sound and Portland, Oregon,

and "to secure the safe and speedy transportation of the mails, troops, munitions of war, and public stores" over such line. It was expressed in present terms—"there be, and hereby is, granted"—and was of "every alternate section of public land, not mineral, designated by odd numbers" within prescribed place limits on each side of the line, excepting such sections or parts of sections as should be found to have been otherwise disposed of, appropriated or claimed, or occupied by homestead settlers, or preëmpted, prior to the definite location of the line. *Nelson* v. *Northern Pacific Ry. Co.*, 188 U. S. 108. As indemnity for any lands so excepted, as also for any excluded as mineral, other lands were to be "selected by said company," under the direction of the Secretary of the Interior, from unoccupied, unappropriated, non-mineral lands in odd-numbered sections within prescribed indemnity limits. The line of the road was to be definitely located by filing a map or maps thereof in the General Land Office; and the road when constructed was to be "subject to the use of the United States, for postal, military, naval, and all other government service, and also subject to such regulations as congress may impose restricting the charges for such government transportation." As each consecutive twenty-five miles of road was constructed and made ready for the service contemplated, the same was to be examined by commissioners selected by the President, and, if they reported that the same was completed in all respects as required, patents were to be issued to the company for the lands opposite to and coterminous with the completed section. The President was to cause the lands along "the entire line" to be surveyed for forty miles in width on both sides "after the general route shall be fixed, and as fast as may be required by the construction of said rail road"; the granted sections within the place limits were to be withheld from sale, entry and preëmption, except as against preëmption and

homestead occupants whose settlement preceded the definite location of the line; all lands within the indemnity limits were to be and remain subject to the operation of the preëmption and homestead laws, save as the odd-numbered sections should be taken out of the operation of those laws by indemnity selections made to supply losses within the place limits (*Hewitt* v. *Schultz*, 180 U. S. 139, 147–149, 155–156; *Weyerhaeuser* v. *Hoyt*, 219 U. S. 380, 387–388); and the price of the even-numbered sections retained by the United States in the place limits was to be increased to double the usual minimum. If the company accepted the terms on which the grant was made, it was required to signify its acceptance in writing under its corporate seal within two years.

The company duly accepted the terms of the grant, filed appropriate maps of the general route, afterwards definitely located the line in the mode prescribed, and constructed and completed the road from Ashland, Wisconsin, on Lake Superior, to Tacoma, Washington, on Puget Sound, and thence to Portland, Oregon, its full length being more than 2,000 miles. The definite location was completed in 1884 and the construction in 1887. The road as completed was examined and favorably reported by the commissioners and accepted by the President. Reports of Commissioner of Railroads—for 1885, p. 22; 1886, p. 36; 1887, p. 24; 1888, p. 24; *Doherty* v. *Northern Pacific Ry. Co.*, 177 U. S. 421; *United States* v. *Northern Pacific R. R. Co.*, 95 Fed. Rep. 864; s. c. 177 U. S. 435; *United States* v. *Northern Pacific R. R. Co.*, 193 U. S. 1.

The losses to the grant in the place limits through other disposals, homestead settlements and the like prior to the definite location of the line, and through the exclusion of lands found to be mineral, amounted to several million acres. To supply these losses it was necessary to resort to the indemnity limits, as was contemplated and provided in the granting act and resolution. In the asserted exer-

cise of this right the company selected the lands in question. The particular losses on account of which the selection was made were such as to support it, the selection was made in conformity with the directions given by the Secretary of the Interior, and the lands selected were subject to selection unless rendered otherwise by a temporary executive withdrawal made about a year before. The local land officers accepted and approved the selection list and in transmitting it to the General Land Office called attention to the withdrawal. But when the Commissioner and the Secretary approved the selection and caused the patent to issue they overlooked the withdrawal and so did not consider or pass on its bearing on the company's right to select the lands. Five years later the matter was called to their attention and they caused this suit to be brought.

The lands in question were not surveyed in the field until near 1905 and the plat of survey was not filed in the local land office until April 5, 1905. This indemnity selection was made later in the same day. On several occasions prior to 1904 the company had endeavored to select lands in the indemnity limits while they were as yet unsurveyed, or before the plat of the survey was filed in the local land office; but the Secretary of the Interior had refused to consider such selections and had directed that none be received until after the land was surveyed and the plat filed. Thus this selection was made as soon as was admissible under the Secretary's directions. The temporary executive withdrawal of the lands was made January 29, 1904, before they were surveyed, and was intended to prevent the acquisition of any claim to them pending an inquiry into the desirability of adding them, along with other lands, to an existing forest reserve. On March 7, 1906, they were added to the reserve by an executive proclamation.

In its defense to the suit the company takes the posi-

tion that the temporary withdrawal did not affect its right to select the lands and therefore that the United States was not prejudiced by the fact that the Commissioner and the Secretary overlooked the withdrawal when the selection was approved and the patent issued. In support of this position the company points to the stipulation on which the case was heard in the District Court wherein,—following a reference to the Act of March 3, 1887, c. 376, 24 Stat. 556, directing the Secretary "to immediately adjust" this and other railroad land grants, and to a special report of the Commissioner, made in 1906, purporting to show that the adjustment of this grant pursuant to that act had progressed to a point where it was disclosed there was a net deficiency in the grant of 4,092,472.99 acres,—it is said:

"The plaintiff admits that when the withdrawal order of January 29, 1904, was issued, the lands patented to the defendant or its predecessor in interest within the primary and all indemnity limits, plus all other lands within the primary or place limits, not patented, but which passed under the grant, and also all odd-numbered sections in all indemnity limits which the defendant was entitled to select under the regulations of the land department did not equal the sum total of all the odd-numbered sections lying within the primary or place limits of the grant, and this condition still obtains; but the plaintiff does not admit that the correct measure of the grant is the aggregate area of all odd-numbered sections within the primary or place limits, or that any definite quantity of land was granted and guaranteed to the defendant by any of the acts of Congress making grants of land to the defendant or its predecessor or predecessors in interest."

And in further support of its position the company contends that where, through preëmption and homestead entries or other disposals, the available lands in the indemnity limits have been so far diminished that those

remaining are all needed to supply losses in the place limits the Government is not at liberty to reserve the remaining lands, or any of them, for its own uses and thereby to cut off the company's right to claim them as indemnity, because, as against the Government, they thenceforth are appropriated to the fulfilment of its obligation under the grant, and because the company has a vested right in the fulfilment of that obligation which all departments of the Government are bound to respect. On the other hand, counsel for the Government insist (a) that no right to lands in the indemnity limits attaches, either generally or specifically, until they are selected by the company, (b) that up to that time the Government is free to reserve them for its own purposes and thereby to cut off the right of selection, and (c) that this is so even where the losses in the place limits exceed the available lands in the indemnity limits, and although the company's purpose to claim the latter be asserted at the earliest opportunity. The question thus presented has an important bearing on the further administration and adjustment of this grant, and perhaps of others, and counsel on both sides have dealt with it accordingly. In its present form the question is new, but the principles which must control its solution are well settled.

The purpose of the granting act and resolution was to bring about the construction and operation of a line of railroad extending from Lake Superior to Puget Sound and Portland through what then consisted of great stretches of homeless prairies, trackless forests and unexplored mountains, and thus to facilitate the development of that region, promote commerce, and establish a convenient highway for the transportation of mails, troops, munitions and public stores to and from the Pacific coast with all the resultant advantages to the Government and the public. To that end the act and resolution embodied a proposal to the company to the effect that if it would

undertake and perform that vast work it should receive in return the lands comprehended in the grant. The company accepted the proposal and at enormous cost constructed the road and put the same in operation; and the road was accepted by the President. Thus the proposal was converted into a contract, as to which the company by performing its part became entitled to performance by the Government. *Burke* v. *Southern Pacific R. R. Co.*, 234 U. S. 669, 679–680. The provision relating to indemnity lands was as much a part of the grant and contract as the one relating to land in place, *Payne* v. *Central Pacific Ry. Co.*, 255 U. S. 228; and it is apparent from the granting act and resolution that "it was the purpose of Congress in making the grant to confer a substantial right to land within the indemnity limits in lieu of lands lost within the place limits." *Weyerhaeuser* v. *Hoyt*, 219 U. S. 380, 387. Such rights are within the protection of the due process of law clause of the Constitution. *Sinking-Fund Cases*, 99 U. S. 700, 718.

When the grant was made by the act and resolution it was thought that the indemnity limits as therein defined contained lands largely in excess of what would be required to supply losses within the place limits, and hence the provision in § 6 under which, as construed by the land officers and this court, all lands in the indemnity limits were to be and remain subject to the operation of the preëmption and homestead laws, save as the odd-numbered sections should be taken out of their operation by indemnity selections. Under that provision, however, the lands available for indemnity were diminished much more rapidly than was expected; but as the provision was one of the terms of the grant the company must submit to whatever of disadvantage results from it. This the company frankly recognizes, for in its brief it says: "It was a part of our contract that, until selected, lands within the indemnity belt should be open to settlement under

the homestead and preëmption laws"; and also, "The question here is not whether in the face of the deficiency the settler [before selection] may acquire rights superior to ours, for we concede that he may." But that provision gives no warrant for thinking that, after the company has earned the right to receive the lands comprehended in the grant, the Government is free to reserve or appropriate to its own uses lands in the indemnity limits which are required to supply losses in the place limits. We say "required" because we perceive no reason to doubt that lands in the indemnity limits may be so reserved or appropriated where what remains is sufficient to satisfy all the losses.

While it often has been said that under such a grant no right attaches to any specific land within the indemnity limits until it is selected, an examination of the cases will show that this general rule never has been applied as between the Government and the grantee where the lands available for indemnity were not sufficient for the purpose. Its only application has been where either the rights of settlers were involved, or the lands available for indemnity exceeded the losses, thereby making it essential that there be a selection and identification of the particular lands sought to be taken. This distinction is illustrated in *St. Paul & Pacific R. R. Co.* v. *Northern Pacific R. R. Co.*, 139 U. S. 1. The question there presented was whether there was any need for a selection where no right of a settler was involved and the lands available for indemnity were not sufficient to supply the losses. By reason of this insufficiency it was ruled that the lands in the indemnity limits necessarily were appropriated to satisfy the losses and that no selection was required. The court said, p. 19: "As to the objection that no evidence was produced of any selection by the Secretary of the Interior from the indemnity lands to make up for the deficiencies found in the lands within the place

limits, it is sufficient to observe that all the lands within the indemnity limits only made up in part for these deficiencies. There was, therefore, no occasion for the exercise of the judgment of the Secretary in selecting from them, for they were all appropriated." That ruling related to the right to indemnity lands under this grant, and so is particularly in point; but it is well to observe that what was said about an existing deficiency related, as appears on pages 8 and 9 of the opinion, to the portion of the grant in Minnesota and not to other portions. This exception to the general rule that a selection is essential has been recognized by this court in other cases. *United States* v. *Missouri, Kansas & Texas Ry. Co.*, 141 U. S. 358, 376; *United States* v. *Colton Marble & Lime Co.*, 146 U. S. 615, 616; *Southern Pacific R. R. Co.* v. *Bell*, 183 U. S. 675, 682.

One of the regulations of the Land Department requires that indemnity selections be accompanied by a specification—tract for tract—of the losses on account of which they are made. But that department holds that this regulation does not apply where the losses exceed the lands which may be taken as indemnity. Thus in *Hastings and Dakota Ry. Co.*, 19 L. D. 30, it was said by Secretary Smith: "The object in establishing the rule was to prevent the possibility of one basis of loss being used for more than one selection. As this grant is known to be deficient over eight hundred thousand acres . . . the danger of a duplication of the losses does not exist; and the reason of the rule ceasing, the rule itself does not operate." And a similar ruling is found in *Chicago, Rock Island & Pacific R. R. Co.* v. *Wagner*, 25 L. D. 458, 460, and other cases.

Giving effect to all that bears on the subject, we are of opinion that after the company earned the right to receive what was intended by the grant it was not admissible for the Government to reserve or appropriate to its own uses

lands in the indemnity limits required to supply losses in the place limits. Of course, if it could take part of the lands required for that purpose, it could take all and thereby wholly defeat the provision for indemnity. But it cannot do either. The "substantial right" conferred by that provision (*Weyerhaeuser* v. *Hoyt, supra*), cannot be thus cut down or extinguished. *Sinking-Fund Cases, supra.*

A more difficult question—to which only slight attention is given in the briefs—is whether it sufficiently appears from this record that the grant was deficient at the time of the temporary withdrawal, that is, that the lands available as indemnity were not then sufficient to supply the losses. The question is one the determination of which rests primarily with the Land Department. The stipulation on which the case was heard does not show that the Department has determined the question, nor that it has refused to do so, but only that the question was not considered when this patent was issued, the withdrawal being then inadvertently overlooked. In these circumstances, to entitle either party to have the question determined in this suit the facts shown should make its right solution quite plain, for the decision might conclude both parties for all time,—as respects other lands as well as those in suit. *Southern Pacific R. R. Co.* v. *United States*, 168 U. S. 1, 48. Of course, the company is entitled to have the question considered and decided somewhere, and, if the deficiency be established, is entitled to have the selection of these lands sustained. A third of a century already has elapsed since the company earned the right to receive what was intended by the grant.

Two matters stated in the stipulation are relied upon as showing a deficiency. One is that in 1906 the Commissioner reported to the Secretary that the adjustment of the grant had progressed to a point where it was dis-

closed that there was a net deficiency of 4,092,472.99 acres. By the Act of March 3, 1887, *supra*, the supervision of the adjustment was specially devolved on the Secretary, and yet the stipulation does not show that he approved the Commissioner's report or in any way recognized it as correct. We think the report, in the absence of any confirmatory action by the Secretary, cannot be taken as sufficiently establishing that a deficiency existed. The other statement is that at the time of the temporary withdrawal all the lands theretofore received by the company plus all that it was possible for it to receive thereafter, whether as place lands or indemnity lands, did not equal "the sum total of all the odd-numbered sections lying within the primary or place limits," and that condition still obtains. But the statement also says that the Government "does not admit that the correct measure of the grant is the aggregate area of all odd-numbered sections within the primary or place limits." What was meant by this qualification is not otherwise disclosed; nor is it explained in the briefs. The aggregate of the odd-numbered sections within the place limits is the correct measure of the grant, unless (a) part of the grant included only a moiety of those sections,[1] or (b) the route of this road and that of another with a prior land grant were found to be upon the same general line, in which event a stated deduction was to be made from the amount of land granted to this company.[2] There would be no right to indemnity as respects the moiety not included, nor as

[1] *Southern Pacific R. R. Co.* v. *United States*, 183 U. S. 519, 525; *Sioux City & St. Paul R. R. Co.* v. *United States*, 159 U. S. 349, 364–365. And see *United States* v. *Northern Pacific R. R. Co.*, 193 U. S. 1.

[2] Section 3 of the granting act contains the following: "*Provided*, That if said route shall be found upon the line of any other railroad route to aid in the construction of which lands have been heretofore granted by the United States, as far as the routes are upon the same general line, the amount of land heretofore granted shall be deducted from the amount granted by this act."

respects the lands required to be deducted. Either of those conditions, if existing, would affect the measure of the grant and would have to be considered in determining whether there was a deficiency. The stipulation does not show the presence or the absence of either condition, and the matter is not one of which courts take judicial notice. Therefore the actual situation, whatever it may have been, should have been shown. As this was not done, neither party is entitled to have the question whether there was a deficiency determined upon the present record.

Turning to the published decisions of the Land Department, we find that in *Hessey* v. *Northern Pacific Ry. Co.*, 43 L. D. 302, the Secretary distinctly declared that the grant was so far deficient that many losses within the place limits must remain unsatisfied, and therefore that compliance with a provision that indemnity selections be made from lands nearest the line of the road was no longer required. But as that finding apparently related to the situation existing December 9, 1909, it cannot be taken as showing that there was a deficiency almost six years before, when the temporary withdrawal now in question was made. The situation may have changed materially in the meantime, for doubtless large numbers of homestead entries were being made within the indemnity limits every year.

We conclude that the decrees below must be reversed and the suit remanded to the District Court with directions (a) to accord the parties a reasonable opportunity, on a further hearing, to supplement and perfect the showing made in the present record, if either or both are so disposed, (b) if the parties avail themselves of that opportunity, to proceed to an adjudication of the suit upon the record as thus supplemented, and (c) if the parties do not avail themselves of that opportunity, to enter a decree canceling the patent without prejudice to the right of the company to have the question of the asserted deficiency

in the grant determined by the Land Department and to have the present selection sustained and given full effect, if the grant was deficient when the temporary withdrawal was made.

Decree reversed.

STATE OF OKLAHOMA *v.* STATE OF TEXAS, UNITED STATES, INTERVENER.

IN EQUITY.

No. 23, Original. Argued December 14, 15, 1920.—Decided April 11, 1921.

Oklahoma brought this suit against Texas to establish the boundary between the two States where it follows the course of the Red River from the 100th degree of west longitude to the easterly boundary of Oklahoma, contending that, as fixed by the Treaty of February 22, 1819 (8 Stat. 252), the line followed the south bank of that river and that this was finally and conclusively adjudicated in the case of *United States* v. *Texas*, 162 U. S. 1, wherein the final decree declared, "that the territory east of the 100th meridian of longitude, west and south of the river now known as the North Fork of Red River, and north of a line following westward, as prescribed by the treaty of 1819 between the United States and Spain, the course, and *along the south bank*, both of Red River and of the river now known as the Prairie Dog Town Fork or South Fork of Red River until such line meets the 100th meridian of longitude—which territory is sometimes called Greer County—constitutes no part of the territory properly included within or rightfully belonging to Texas at the time of the admission of that State into the Union, and is not within the limits nor under the jurisdiction of that State, but is subject to the exclusive jurisdiction of the United States of America;" the United States, intervening to protect proprietary interests claimed for itself and for Indians in the bed of the river, supported these contentions of Oklahoma; while Texas contended that the boundary was fixed by the treaty at the middle of the main channel of the river, and denied that its precise location, whether there or on the south bank, was determined by the former proceeding, asserting that the issues there respecting the river were confined to the question which of

the two forks was the Red River of the treaty and to the ownership of and jurisdiction over the disputed land lying between them.

Held: (1) That, since there was jurisdiction over the subject-matter and parties in the former case, and since the parties in the cases were the same or in privity, (Oklahoma having succeeded in part, as to governmental jurisdiction, to the position formerly held by the United States), the decree, in locating the boundary line with respect to the course of Red River and in construing the treaty as placing it along the south bank, was conclusive in this case, if the matter so decided was within the issues then proper to be decided, or was presented and actually determined in the course of deciding those issues. P. 86.

(2) That what was involved and determined in the former suit was to be tested by an examination of the record and proceedings therein, including the pleadings, the evidence submitted, the respective contentions of the parties, and the findings and opinion of the court, there being no occasion for resorting to extrinsic evidence. P. 88.

(3) That the matter of the true location of the boundary between the territory of the United States and Texas where it followed the Red River bordering upon Greer County, and the question whether the boundary followed the middle or the south bank of the River, were within the issues made by the pleadings, recognized by both parties and the court, to be determined according to the true effect and meaning of the Treaty of 1819; that, in elucidation, the treaty, and much historical evidence of the negotiations that led up to it, were introduced, discussed by counsel in argument, and referred to in the opinion of the court; and that the matter was directly determined and made a part of the final decree, and by every applicable test was *res judicata*. P. 92.

(4) That the adjudication not only concluded the parties with respect to that part of the boundary which borders upon what was called Greer County, but settled the construction of the treaty (Art. 3) as to the entire course of the Red River where it marks the boundary between the territory then of the United States and that of the State of Texas. P. 93.

THE case is stated in the opinion, *post* 81. (See *post*, 602.)

Mr. Assistant Attorney General Garnett, with whom *Mr. W. W. Dyar* and *Mr. John A. Fain*, Special Assistants to the Attorney General, were on the brief, for the United States, intervener.

Mr. C. M. Cureton, Attorney General of the State of Texas, and *Mr. Thomas W. Gregory*, with whom *Mr. W. A. Keeling*, *Mr. E. F. Smith*, *Mr. C. W. Taylor*, *Mr. G. Carroll Todd* and *Mr. R. H. Ward* were on the brief, for defendant:

The Treaty of 1819, construed without the assistance of other public documents or acts, fixes the boundary along the mid-channel of Red River. This is confirmed by the negotiations leading up to the treaty and the construction placed upon it by the United States, Oklahoma and the Republic and State of Texas, as indicated by their legislative, executive and judicial documents and acts.

In so far as the decree in the Greer County case, *United States* v. *Texas*, 162 U. S. 1, referred to the boundary line of the Treaty of 1819 as following the south bank of Red River, it was outside the issues litigated and is not conclusive upon the parties to this cause. The pleadings and opinion in that case show that only two issues were presented for decision, the first being whether the 100th meridian erroneously shown by Melish's Map, or the true meridian, should govern, the second issue being which of the two forks of Red River was, above their point of junction, the Red River described in Art. 3 of the Treaty of 1819.

Texas contended that the Melish Map should control, and that, therefore, the boundary lay far east of the forks of Red River, and that Texas was, therefore, entitled to the land known as Greer County without reference to whether the North or South Fork of Red River was the river of the treaty. In the Greer County case the court discusses this first issue on pages 29 to 42 of the opinion, and deciding against the contention of Texas concludes with the statement that the astronomically correct location of the 100th meridian, and not the erroneous location of that meridian shown by Melish's Map, governs.

The court then immediately adds that, "the real question for solution is whether, as contended by the United States, the line 'following the course of the Rio Roxo *westward* to the degree of longitude 100 west from London' meets the 100th meridian at the point where Prairie Dog Town Fork of Red River crosses that meridian, or whether, as contended by the State, it goes *northwestwardly* up the North Fork of Red River until *that* river crosses the 100th meridian many miles due north of the initial monument established by the United States in 1857."

Conformably with its allegations, the amended bill prayed to have determined "and put at rest questions which now exist as to whether the Prairie Dog Town fork or the North fork of Red River, as aforesaid, constitutes the true boundary line of the Treaty of 1819, aforesaid, and whether the tract or parcel of land lying and being between said two streams, and called by the authorities of the State of Texas 'Greer County,' is within the boundary and jurisdiction of the United States, or of the State of Texas." It is therefore specifically stated that one of the "questions which now exist" is which fork constituted the boundary line of the treaty, and the other question is did the land lying between the two forks belong to the United States or Texas.

The prayer asks to have the "true boundary line" determined and settled, but, in the same sentence, this general request is limited by the specific statement that the issue is "whether the Prairie Dog Town fork or the North fork of Red River, as aforesaid, constitutes the true boundary line of the Treaty of 1819;" the general request to have the true boundary line determined is, therefore, qualified by the more specific prayer that the court determine which of the two forks constitutes the true boundary line.

But, if the prayer is given a broader meaning than that

which is here suggested as correct, it will not warrant a decree going beyond the issue made by the pleadings. No matter how broad the prayer for relief may be the decree must conform to the case stated in the bill. *Allen* v. *Pullman's Palace Car Co.*, 139 U. S. 658, 662; *Kent* v. *Lake Superior Canal Co.*, 144 U. S. 75, 92; *Cates* v. *Allen*, 149 U. S. 451, 459; *Barnes* v. *Chicago, Milwaukee & St. Paul Ry.*, 122 U. S. 1.

The answer of Texas met the issue concerning the two forks and set forth a number of reasons why the court should find that the North Fork was the river of the treaty. Certain acts of the plaintiff alleged to be a recognition of the defendant's claim were pleaded, but none of these acts raises any question concerning the location of the treaty line upon Red River. The answer concludes by asserting that "The Rio Roxo of the Treaty is and was the North Fork of Red river, so called by the complainant, and not the Kecheaquehono or South prong of Red river, as styled by complainant," and that "Greer County hath ever been the territory of Texas and of those to whom Texas is successor," and asked for dismissal of the bill.

The briefs filed in the Greer County case do not, any more than the pleadings, raise any question concerning the location of the treaty line upon Red River. There is, therefore, no evidence that, although the pleadings did not raise this issue, the parties nevertheless presented the question to the court. On the contrary, the briefs show that they did not do so. The lack of such proof and contention are important since the party invoking the doctrine of *res judicata* as to even an essential issue not involved in the pleadings has the burden of establishing that the issue was in fact litigated. *Silberstein* v. *Silberstein*, 218 N. Y. 525, 528.

The opinion in the Greer County case clearly recognizes the nature of the issues presented by the pleadings and

litigated by the parties. It even states the exact acreage, down to a fraction of an acre, contained in Greer County, and says that the land involved is north of the line marked on the map with the words "Boundary claimed by U. S." On turning to the map referred to and appearing on page 22 of the opinion, it will be observed that the "Unassigned Land" is thereon indicated as bounded on the south by a line marked "Boundary claimed by U. S." and that the land in dispute lies north of this line, as stated by the court; also that the line marked "Boundary claimed by U. S." is not on the south side of the river, but is either on the north side of the river or in the middle of the river.

In no part of the lengthy opinion does the court discuss the question whether the boundary line follows the mid-channel or the south bank of Red River. The opinion does not mention the south bank of Red River, but in one place it assumes that the treaty placed Red River within the United States (p. 37).

No reason is given in support of this conclusion. The statement in regard to Red River is, in fact, merely parenthetical, and is beside the point which the court was considering, namely, whether the 100th meridian of the boundary line was that marked upon Melish's Map or was the true 100th meridian.

Not only was there no allegation or contention in the pleadings, or in the briefs or in the opinion, in the Greer County case to the effect that the south bank of Red River was, or was not, the boundary, but it is confidently asserted that the words "south bank," in relation to Red River, do not occur in the entire Greer County record and proceedings except in the decree of the court.

The pleadings in the Greer County case excluded from the court's consideration the question whether or not the boundary line followed the south bank of Red River.

The present suit is to settle the title to the land lying

between the middle of Red River and its south bank; the Greer County case was to determine which fork of Red River was the river of the treaty and thereby settle the title to the land between those forks.

The amended bill sums up the substance of the complaint by stating that the United States by the Treaty of 1819, "Became entitled to possession of and jurisdiction over all that parcel or tract of land which lies between what has been herein designated as the Prairie Dog Town Fork or Main Red River, and the North Fork of Red River." The answer of Texas does not question or deny complainant's above description of the area in controversy. The opinion recognizes that the lands in litigation were bounded by and lay between the two forks of the river. The act of the Texas legislature creating Greer County and fixing the river forks as boundaries was quoted in the opinion, and at another point (p. 88) Justice Harlan refers to the fact that Texas had "created the county of Greer with boundaries that include the whole of the territory in dispute."

The pleadings and opinion show that the land in dispute was throughout defined as bounded, except on the west, by the two forks of Red River.

A river named as a boundary fixes the line in the main channel of the stream unless other clauses are used which extend or restrict the grant. This rule is applied to the construction of private grants. *Brown* v. *Huger*, 21 How. 305, 320; *Railroad Co.* v. *Schurmeir*, 7 Wall. 272, 287. It is also the rule applied to treaties or public enactments. Where a navigable river is made the boundary between States the line, in the absence of a contrary stipulation, follows the middle of the main channel, or the *Thalweg*, of the stream. *Handly's Lessee* v. *Anthony*, 5 Wheat. 373, 379; *Iowa* v. *Illinois*, 147 U. S. 1; *Arkansas* v. *Tennessee*, 246 U. S. 158; *Minnesota* v. *Wisconsin*, 252 U. S. 273.

By applying these rules of construction it is seen that

in the Greer County case the territory in controversy was stated to be that lying between the center of the main channel of the North Fork and the center of the main channel of the South Fork of Red River and east of the 100th meridian.

The issue contained in the pleadings was therefore made definite by description of the territory involved in the dispute. This description eliminated from the court's consideration any issue of whether the line fixed by the Treaty of 1819 followed the center of the main channel or the south bank of Red River, for the disputed area did not extend south of the center of the main channel of the South Fork of the river. To decree that the land south of the center of this main channel belonged to the United States was to overstep the limits of the case made by the parties.

The petition of intervention filed by the United States in this cause suggests that the court in the Greer County case, after awarding the land in controversy to the United States, was required to "define and delimit with certainty . . . both southern and the western boundaries." This suggestion is based on the incorrect assumption that the parties had asked the court to define and delimit the boundaries of the disputed territory, whereas in fact the parties had themselves defined this territory and had agreed upon its limits as those of Greer County. Having so agreed, the court was not only not required, but it was not authorized, to enter a decree going beyond those limits.

When a suit is upon a demand different from that involved in a former suit between the same parties or their privies, the decree in the former suit is conclusive only in respect to matters put in issue and litigated in that suit. *Southern Pacific R. R. Co.* v. *United States*, 168 U. S. 1, 48, 49; *Cromwell* v. *County of Sac*, 94 U. S. 351, 356; *Russell* v. *Place*, 94 U. S. 606, 608, 609; *Radford* v. *Myers*, 231 U. S. 725, 733.

The doctrine of *res judicata* rests upon the fact of prior litigation of the same question. Accordingly, when the doctrine is invoked the court is called upon to decide whether the matter alleged to be concluded was or was not in fact litigated in the prior suit. In case of doubt the court determines the scope of the matters previously litigated by interpreting the decree which was entered, in the light of the pleadings and of the opinion of the court. *National Foundry & Pipe Works* v. *Oconto Water Co.*, 183 U. S. 216, 234. If the pleadings and the opinion of the court show that any portions of the prior decree went beyond the issues litigated the court in the subsequent suit limits the binding effect of this decree to the questions which were actually presented to the court for decision. *Graham* v. *Railroad Co.*, 3 Wall. 704; *Barnes* v. *Chicago, Milwaukee & St. Paul Ry.*, 122 U. S. 1; *Vicksburg* v. *Henson*, 231 U. S. 259.

The rule that the binding effect of a decree is limited to the issues either framed by the pleadings or actually litigated is not a mere rule of construction, but is a binding restriction upon the power of the court, rendering void any judgment or any portion of a judgment rendered in violation of the rule. *Reynolds* v. *Stockton*, 140 U. S. 254, 265, 266; *Washington R. R.* v. *Bradleys*, 10 Wall. 299, 303; *Landon* v. *Clark*, 221 Fed. Rep. 841; *Mitchell* v. *Insley*, 33 Kansas, 654. The opinions of text writers and the decisions of state and federal courts unanimously support the rule that a decree or judgment is void in so far as it purports to decide a point not in issue in the case [citing many cases].

No special features in the Greer County case authorized a decree outside the scope of the issues litigated. The principle that "equity will do complete justice" did not extend the scope of the issues. That principle does not in any way blur the difference between matters in issue and those not in issue. It applies only to the

former, but it says that equity is not barred from giving complete relief because part of the relief which it grants might have been given by a court of law. *United States* v. *Union Pacific Ry. Co.*, 160 U. S. 1, 50. Defendant therefore points out that the principle cannot be applied so as to enlarge or extend the issues made by the parties in the Greer County case.

It should also be noted that in the Greer County case this court was not exercising the usual form of equity jurisdiction, but a jurisdiction based on the exercise of sovereign authority and the maintenance of peace and order within the territory involved. As an ordinary rule courts of equity will not act to ascertain boundaries unless, in addition to confusion over the boundaries, there is some peculiar equity suggested, such as fraud, multiplicity of suits, or such relationship between the parties that it is incumbent upon one of them to preserve the boundaries. Pomeroy's Equitable Remedies, 2nd ed., §§ 694–697.

This court has not treated boundary disputes between States as strictly a part of equity jurisdiction, but has followed what seemed to be the nearest precedents and framed its proceedings according to those adopted by the English Court of Chancery where boundaries of political bodies were brought in question before it; in these boundary disputes between States the court has followed the rules of equity only when they appeared to serve the ends of justice. *Rhode Island* v. *Massachusetts*, 14 Pet. 210, 256–258.

The declarations in the opinion cited are not such as would lead this court to apply to the Greer County case any equitable principle which would so operate as to conclude a sovereign State in respect of a boundary question which was not in issue, which the State never argued and was never called on to argue, and which was never presented to the court, particularly in such a case as the

in the grant determined by the Land Department and to have the present selection sustained and given full effect, if the grant was deficient when the temporary withdrawal was made.

Decree reversed.

STATE OF OKLAHOMA *v.* STATE OF TEXAS, UNITED STATES, INTERVENER.

IN EQUITY.

No. 23, Original. Argued December 14, 15, 1920.—Decided April 11, 1921.

Oklahoma brought this suit against Texas to establish the boundary between the two States where it follows the course of the Red River from the 100th degree of west longitude to the easterly boundary of Oklahoma, contending that, as fixed by the Treaty of February 22, 1819 (8 Stat. 252), the line followed the south bank of that river and that this was finally and conclusively adjudicated in the case of *United States* v. *Texas*, 162 U. S. 1, wherein the final decree declared, "that the territory east of the 100th meridian of longitude, west and south of the river now known as the North Fork of Red River, and north of a line following westward, as prescribed by the treaty of 1819 between the United States and Spain, the course, and *along the south bank*, both of Red River and of the river now known as the Prairie Dog Town Fork or South Fork of Red River until such line meets the 100th meridian of longitude—which territory is sometimes called Greer County—constitutes no part of the territory properly included within or rightfully belonging to Texas at the time of the admission of that State into the Union, and is not within the limits nor under the jurisdiction of that State, but is subject to the exclusive jurisdiction of the United States of America;" the United States, intervening to protect proprietary interests claimed for itself and for Indians in the bed of the river, supported these contentions of Oklahoma; while Texas contended that the boundary was fixed by the treaty at the middle of the main channel of the river, and denied that its precise location, whether there or on the south bank, was determined by the former proceeding, asserting that the issues there respecting the river were confined to the question which of

the two forks was the Red River of the treaty and to the ownership of and jurisdiction over the disputed land lying between them.

Held: (1) That, since there was jurisdiction over the subject-matter and parties in the former case, and since the parties in the cases were the same or in privity, (Oklahoma having succeeded in part, as to governmental jurisdiction, to the position formerly held by the United States), the decree, in locating the boundary line with respect to the course of Red River and in construing the treaty as placing it along the south bank, was conclusive in this case, if the matter so decided was within the issues then proper to be decided, or was presented and actually determined in the course of deciding those issues. P. 86.

(2) That what was involved and determined in the former suit was to be tested by an examination of the record and proceedings therein, including the pleadings, the evidence submitted, the respective contentions of the parties, and the findings and opinion of the court, there being no occasion for resorting to extrinsic evidence. P. 88.

(3) That the matter of the true location of the boundary between the territory of the United States and Texas where it followed the Red River bordering upon Greer County, and the question whether the boundary followed the middle or the south bank of the River, were within the issues made by the pleadings, recognized by both parties and the court, to be determined according to the true effect and meaning of the Treaty of 1819; that, in elucidation, the treaty, and much historical evidence of the negotiations that led up to it, were introduced, discussed by counsel in argument, and referred to in the opinion of the court; and that the matter was directly determined and made a part of the final decree, and by every applicable test was *res judicata*. P. 92.

(4) That the adjudication not only concluded the parties with respect to that part of the boundary which borders upon what was called Greer County, but settled the construction of the treaty (Art. 3) as to the entire course of the Red River where it marks the boundary between the territory then of the United States and that of the State of Texas. P. 93.

THE case is stated in the opinion, *post* 81. (See *post*, 602.)

Mr. Assistant Attorney General Garnett, with whom *Mr. W. W. Dyar* and *Mr. John A. Fain*, Special Assistants to the Attorney General, were on the brief, for the United States, intervener.

between the two countries where formed by the Red River was established as following the south bank of that stream; that after Mexico had become independent, and on January 12, 1828, a treaty was concluded, and on April 5, 1832, ratified and proclaimed, between the United States of America and the United Mexican States, by which the validity of the Treaty of 1819 was confirmed (8 Stat. 372); that in the year 1837 Texas was recognized as an independent republic, no longer under the power and jurisdiction of Mexico, and on April 25, 1838, a treaty was concluded, and in the same year ratified and proclaimed, between the United States and the Republic of Texas, by which the boundary as thus established was accepted by that Republic as binding (8 Stat. 511); and that under joint resolutions of Congress dated respectively March 1 and December 29, 1845 (5 Stat. 797; 9 Stat. 108), Texas was admitted into the Union as a State, with "the territory properly included within, and rightfully belonging to the Republic of Texas." That by Act of Congress approved May 2, 1890, a temporary government was provided for a part of the territory adjoining said boundary on the north, now comprised in the State of Oklahoma, under the name of the Territory of Oklahoma (c. 182, 26 Stat. 81), and that by § 29 (p. 93) the remaining part was designated as the Indian Territory; but that by § 25 (p. 92), in view of the existence of a controversy between the United States and the State of Texas as to the ownership of what was known as Greer County, described as "the tract of land lying between the North and South Forks of the Red River where the Indian Territory and the State of Texas adjoin, east of the one hundredth degree of longitude," it was provided that the act should not apply to that county until the title thereto had been adjudicated and determined to be in the United States; and, in order to provide for a speedy and final judicial determination of the controversy, the Attorney General

was authorized and directed to commence in the name and behalf of the United States and prosecute to a final determination a suit in equity in this court against the State of Texas; that accordingly, at the October Term, 1895 (1890), the Attorney General of the United States filed in this court an original bill against the State of Texas to determine whether the territory embraced within the then County of Greer was in the State of Texas or within the territory and exclusive jurisdiction of the United States; that after a full hearing of said cause this court found, decided, and decreed that the territory east of the 100th meridian of longitude, west and south of the river now known as the North Fork of Red River, and north of a line following westward, as prescribed by the Treaty of 1819, the course, and along the south bank, both of Red River and of the river now known as the Prairie Dog Town Fork or South Fork of Red River until such line meets the 100th meridian of longitude, constitutes no part of the territory properly included within or rightfully belonging to Texas at the time of the admission of that State into the Union, and was not within the limits nor under the jurisdiction of that State, but was subject to the exclusive jurisdiction of the United States of America (162 U. S. 1, 90–91); and that afterwards, under Act of Congress approved June 16, 1906, c. 3335, 34 Stat. 267, the inhabitants of the area constituting the Territory of Oklahoma (including said Greer County) and the Indian Territory were admitted into the Union as the State of Oklahoma.

The State of Texas appeared in the present suit and filed an answer denying that the Treaty of 1819 fixed the boundary at the south bank of the Red River; asserting on the contrary that the treaty, by its legal meaning and effect, fixed it in the middle of the main channel of that river; denying that the effect of the decree in the case of *United States* v. *Texas* was to determine that the south

bank of Red River, or of the Prairie Dog Town Fork or South Fork of that river, constituted the boundary between the United States and Texas at any point; and setting up a counterclaim and other matters not necessary to be here repeated.

The United States, by leave of the court, intervened, and by its petition of intervention set up an interest as trustee of Indian allottees with respect to certain portions of the bed of the Red River and as owner in its own right of a large part of the bed and of numerous islands therein; and supported the contentions of the State of Oklahoma as to the location of the boundary line by the true construction of the Treaty of 1819 and as to the effect of the final decree in *United States* v. *Texas*.

At the same time it was brought to the attention of the court that because of the recent discovery and development of oil and gas deposits in the bed of the river adjacent to Wichita County, Texas, serious conflicts had arisen between parties claiming title from the State of Texas and others claiming title from the State of Oklahoma or under the mineral laws of the United States; and that there was danger of the exhaustion of the deposits of oil and gas pending the determination of the questions at issue between the parties to the cause, and danger of armed conflict between rival claimants under them; and thereupon, on motion of the United States, concurred in by the State of Oklahoma and consented to by the State of Texas as to lands claimed in its proprietary capacity, we appointed a receiver to take possession of that part of the river bed lying between mid-channel and the south bank, and within the disputed oil field.

Pending the receivership, by order of June 7, 1920, made pursuant to the suggestion of the parties, we set the cause down for hearing at the present term upon two questions of law, with leave to take testimony pertinent to the purpose. 253 U. S. 471.

The testimony was taken and returned, a hearing has been had, and the matter is now to be decided.

The questions are as follows: "(1) Is the decree of this court in *United States* v. *The State of Texas*, 162 U. S. 1, final and conclusive upon the parties to this cause in so far as it declares that the Treaty of 1819 between the United States and Spain fixed the boundary along the south bank of Red River? (2) If said decree is not conclusive, then did the Treaty of 1819, construed in the light of pertinent public documents and acts, fix the boundary along the mid-channel of Red River or along the south bank of said river?"

The first is a question of *res judicata*, and, obviously, if it is answered in the affirmative, the second becomes immaterial.

The general principle, applied in numerous decisions of this court, and definitely accepted in *Southern Pacific R. R. Co.* v. *United States*, 168 U. S. 1, 48–49, is, that a question of fact or of law distinctly put in issue and directly determined by a court of competent jurisdiction as a ground of recovery or defense in a suit or action between parties *sui juris* is conclusively settled by the final judgment or decree therein so that it cannot be further litigated in a subsequent suit between the same parties or their privies, whether the second suit be for the same or a different cause of action. As was declared by Mr. Justice Harlan, speaking for the court in the case cited (p. 49): "This general rule is demanded by the very object for which civil courts have been established, which is to secure the peace and repose of society by the settlement of matters capable of judicial determination. Its enforcement is essential to the maintenance of social order; for, the aid of judicial tribunals would not be invoked for the vindication of rights of person and property, if, as between parties and their privies, conclusiveness did not attend the judgments of such tribunals in respect of

all matters properly put in issue and actually determined by them."

In order to aid us in ascertaining whether the question of boundary location now at issue was settled by the decision and decree in the Greer County case, the parties have stipulated that the entire record in that case, including pleadings, stipulations, testimony, briefs, and documents of every character, now on file in this court, and the orders and decrees of the court therein, are to be considered in evidence for all purposes. They have been examined and considered accordingly.

The jurisdiction of the court over the subject-matter of that suit—its original jurisdiction over a suit in equity brought by the United States against one of the States to determine the boundary between such State and a Territory of the United States—was put at issue by a demurrer to the bill of complaint in that case, and decided in favor of the jurisdiction. *United States* v. *Texas*, 143 U. S. 621, 641, *et seq.* It was set at rest when followed by the making of a final decree. *United States* v. *Texas*, 162 U. S. 1, 90–91.

That the court had jurisdiction over the parties is obvious from the fact that the suit was brought in behalf of the United States pursuant to an act of Congress (Act of May 2, 1890, c. 182, § 25, 26 Stat. 81, 92), that a bill of complaint and an amended bill were filed, to each of which the State of Texas demurred, and also answered; and that the United States filed a replication (162 U. S. 21–23), and both parties introduced evidence and participated in the hearing.

There is identity of parties between the former suit and the present one, so far as concerns the proprietary interest now set up by the United States. As to governmental jurisdiction, the State of Oklahoma has succeeded in part to the position formerly held by the United States, and therefore is in privity with it.

The former decision was based upon final hearing, on issue joined between the parties and upon evidence taken by both; and, as stated, it resulted in a final decree (162 U. S. 90–91).

Therefore it remains only to consider whether the "right, question, or fact" now in controversy—the location of the boundary line with respect to the course of the Red River, and whether by the true construction of the Treaty of 1819 its location is along the south bank or in mid-channel—was put in issue and directly determined in the former case. That the final decree purports to determine it, is obvious from a reading of the language employed (162 U. S. 90): "That the territory east of the 100th meridian of longitude, west and south of the river now known as the North Fork of Red River, and north of *a line following westward, as prescribed by the treaty of 1819 between the United States and Spain, the course, and along the south bank, both of Red River and of the river now known as the Prairie Dog Town Fork or South Fork of Red River until such line meets the 100th meridian of longitude*—which territory is sometimes called Greer County—constitutes no part of the territory properly included within or rightfully belonging to Texas at the time of the admission of that State into the Union, and is not within the limits nor under the jurisdiction of that State, but is subject to the exclusive jurisdiction of the United States of America."

The literal meaning of this is not seriously disputed; but it is insisted that, so far as it describes the boundary line of the treaty as following the south bank of the river, it was outside the issues litigated, and hence is not conclusive upon the parties to this cause—in effect, that in construing the decree the words "along the south bank" should be excluded from consideration. Clearly, the inclusion of those words amounted to a decision that the correctness of that particular definition of the boundary

was within the issues in the cause. But we concede that, in a subsequent suit upon a different cause of action, the question whether the matter decided on the former occasion was within the issues then proper to be decided, or was presented and actually determined in the course of deciding those issues, is open to inquiry, and that, unless it be answered in the affirmative, the matter is not *res judicata.*

What was involved and determined in the former suit is to be tested by an examination of the record and proceedings therein, including the pleadings, the evidence submitted, the respective contentions of the parties, and the findings and opinion of the court; there being no suggestion that this is a proper case for resorting to extrinsic evidence. *Russell* v. *Place*, 94 U. S. 606, 608; *Last Chance Mining Co.* v. *Tyler Mining Co.*, 157 U. S. 683, 688, *et seq.; Baker* v. *Cummings*, 181 U. S. 117, 124–130; *National Foundry & Pipe Works* v. *Oconto Water Supply Co.*, 183 U. S. 216, 234.

The Act of May 2, 1890, c. 182, 26 Stat. 81, 92, briefly recited the existence of a controversy between the United States and the State of Texas as to the ownership of the land known as Greer County, and directed the Attorney General to bring suit in this court in order that the rightful title to that land might be finally determined. Referring to this, and to the history and nature of the controversy, it is contended that the pleadings should be so construed as to confine the issue to the identification of one of the forks of the Red River with the Red River of the treaty. It is true that the principal matter in dispute was the claim of the United States to ownership of the tract of land lying between the forks and bounded on the west by the 100th meridian. But the bill and the amended bill, after reciting Article 3 of the treaty defining the boundary line between the United States and Spain, by which both parties to the cause were bound, and recount-

ing the history of the controversy, concluded with a prayer that the bill might be filed and Texas made a defendant thereto, "to the end and for the purpose of *determining and settling the true boundary line* between the United States and the State of Texas, and to determine and put at rest questions which now exist as to whether the Prairie Dog Town Fork or the North Fork of Red River, as aforesaid, constitutes the true boundary line of the Treaty of 1819"; and that upon final hearing a decree might be entered establishing complainant's rights as set up in the bill; and there was a prayer for general relief. The contention now made is based upon an unduly narrow interpretation of the act and of the pleading. Granting that the substantial controversy related to the ownership of and jurisdiction over the tract lying between the forks, it was essential to a complete and precise disposition of that controversy that the court should define with certainty the bounds of the tract. If it were to be awarded to the State of Texas, an accurate definition of its northerly boundary was essential; if to the United States, like accuracy in defining its southerly boundary was called for; in either case, the line to be defined was "the true boundary line between the United States and the State of Texas." And if, as suggested, the river is to be regarded as navigable (upon which we express no opinion), so that a boundary line separating national territory from that of the State, if described as following the river, without more, would by implication follow the middle of the main navigable channel, as in a case between adjoining States (*Iowa* v. *Illinois*, 147 U. S. 1, 13; *Arkansas* v. *Tennessee*, 246 U. S. 158, 171), so much the more was specific mention of the bank essential to an accurate description of the tract in issue, if the bank was the true line instead of mid-channel. And if at the termination of the suit the line were left undefined, a ground of further controversy would remain; and it is as foreign to correct

practice as to the principles of equity that a final decree should be pregnant with further litigation.

Even less substantial is the suggestion that the language of § 25 of the Act of 1890 (26 Stat. 92) authorizing suit to determine the title to the tract "*lying between* the North and South Forks of the Red River," etc., and the use of that phrase in the amended bill, had the effect of excluding from the issue land south of the middle of the south fork. Upon so narrow an interpretation, the controversy might as well be confined to the upland between the forks, leaving the United States without claim to any part of the bed of the stream, if the south fork proved to be the river of the treaty. Of course, the phrase merely pointed out the tract in dispute, without attempting to delimit it.

The contention that the evidence and the arguments in the Greer County case raised no controversy as to whether the boundary followed the mid-channel or the south bank of the river is not well founded. The Treaty of 1819, and a mass of historical and other data bearing upon its proper interpretation, were before the court. It appeared that the treaty was negotiated at Washington between the Spanish Minister, Don Luis de Onis, and the United States Secretary of State, John Quincy Adams; M. de Neuville, the French Minister, acting at times as an intermediary. The State of Texas itself introduced authenticated extracts from the instructions of the Spanish Minister, and excerpts from correspondence between him and Mr. Adams, from which latter it appeared that the question whether the boundary should follow the middle of the Sabine and Red Rivers, or the westerly bank of the former and the southerly bank of the latter, was one of the points under discussion; the Spanish Minister proposing the middle lines, Mr. Adams the banks.

Furthermore, in the principal brief for the State of Texas, reference was made to entries in Mr. Adams' diary, found in his Memoirs, vol. 4, pp. 233–280, in con-

nection with which the brief declared: "An objection was long persisted in by Spain that instead of the banks of the rivers named being boundaries the middle of the river should be the dividing line (Adams, *sup.*). This objection was at last abandoned," etc. The diary itself, in the pages thus referred to, abounds in statements to the effect that the representative of Spain, during the course of the negotiation, insisted that the middle of the rivers should be taken for the boundary, Mr. Adams firmly insisting upon "the western and southern banks," and at last prevailing. J. Q. Adams' Memoirs, vol. 4, pp. 255, 256, 261, 264, 266, 267, 270. It is true these references were made by counsel for Texas principally with the object of showing the important part that the Melish Map (mentioned in the treaty) played in the negotiations; but it is impossible to escape the conclusion that both counsel and the court understood that the question whether the boundary line, where it followed the Sabine and Red Rivers, should be so located as to establish the United States as owner of the rivers or so as to divide the ownership between the United States and Spain, figured to an important extent in the negotiations, was disposed of by the treaty, and hence was vital to the correct location of the boundary line as between the litigants. If the point was not controverted, it was only because counsel for Texas in effect conceded that the treaty line ran along the south bank of the Red River. It may have seemed, at that time, a matter of no great moment.

Finally, the precise matter was discussed in the opinion of the court, and was made the subject of a finding which was carried into the final decree. In the course of an outline of the diplomatic correspondence and negotiations that preceded the making of the treaty, the court said (p. 27): "The Spanish minister required that 'the boundary between the two countries shall be the middle of the rivers, and that the navigation of the said rivers

shall be common to both countries.' Mr. Adams replied that the United States had always intended that 'the property of the river should belong to them,' and he insisted on that point 'as an essential condition, as the means of avoiding all collision, and as a principle adopted henceforth by the United States in its treaties with its neighbors.' He agreed, however, 'that the navigation of the said rivers to the sea shall be common to both people.'" Citing Annals of Congress, Appendix, 15th Cong., 2d sess., 2120, 2121, 2123. The opinion then proceeded to set forth (pp. 27-29) the third and fourth articles of the treaty, in the former of which occurs the language that Mr. Adams had insisted upon as carrying out the purposes of the United States that "the property of the river should belong to them"; and at a later point the opinion declared (p. 37): "The two governments certainly intended that the line should be run from the Gulf along the western bank of the Sabine River, and after it reached Red River that it should follow the course of that river, leaving both rivers within the United States."

And, having decided the case in favor of the United States, the court embodied in the final decree a description of the boundary line, in terms quoted above.

To sum it up, we find that the question of the true location of the boundary between the territory of the United States and Texas where it followed the Red River bordering upon Greer County, and the question whether the boundary followed the middle or the south bank of the river, were within the issues made by the pleadings, and so recognized by both parties, as well as by the court; that, by the concession of both, the location was to be determined according to the true effect and meaning of the Treaty of 1819; that in elucidation of the matter the treaty, and much historical evidence of the negotiations that led up to it, were introduced, discussed by counsel in argument, and referred to in the opinion of the court;

and that the point was directly determined by the court and the determination made a part of its final decree. By every test that properly can be applied, the matter is *res judicata.*

And, of course, it not only concludes the parties with respect to that part of the boundary which borders upon what was called Greer County, but settles the construction of Article 3 of the Treaty of 1819 as to the entire course of the Red River where it marks the boundary between the territory then owned by the United States and that of the State of Texas.

Having reached this conclusion upon the first of the two questions proposed for decision, it is unnecessary to consider the second, which is whether the treaty, by proper construction, fixes the boundary along the mid-channel or the south bank. The matter being *res judicata,* as the result of the decree in the former suit, it is of no consequence whether it was correctly decided or not. We say this without intending to intimate the least doubt about the propriety of that decision.

The parties may submit within thirty days a proper form of decree for carrying this decision into effect.

It is so ordered.

MR. JUSTICE CLARKE took no part in the consideration or decision of this case.

OWNBEY *v.* MORGAN ET AL., EXECUTORS OF MORGAN.

ERROR TO THE SUPREME COURT OF THE STATE OF DELAWARE.

No. 99. Argued November 18, 1920.—Decided April 11, 1921.

1. The Delaware rule in foreign attachment cases which conditioned the defendant's right to appear and contest the merits of the plaintiff's demand upon his first giving special bail or (as the rule was amended) a surety's undertaking, and which was in force since colonial days, finding its origin in the Custom of London and its counterparts or analogues in procedure adopted by other colonies and States and familiar in the common law and admiralty, cannot be regarded as an arbitrary and unreasonable rule, violative of the due process clause of the Fourteenth Amendment (Del. Rev. Code, 1915, 4123, § 6). Pp. 102, 108.
2. Nor may the rule be adjudged obnoxious to due process in a particular case where, through exceptional misfortune, a defendant was unable to furnish the necessary security. P. 110.
3. One who acquires property in a State and departs must be presumed to have known and consented to such a rule of foreign attachment, already in force. P. 111.
4. A distinction made in foreign attachment cases between non-resident individuals and foreign corporations, requiring the individual to furnish special security before appearing and making defense but allowing the corporation to defend on the security of the attachment lien, *held* not a denial to individuals of equal protection of the law. P. 112.
5. The privileges and immunities referred to in the Fourteenth Amendment are such as owe their existence to the Federal Government, its national character, its Constitution, or its laws. P. 113.

30 Delaware, 297, affirmed.

THE case is stated in the opinion, *post*, 98.

Mr. Louis Marshall for plaintiff in error:

The statutes of Delaware and the proceedings taken thereunder in this case are unconstitutional and void, in

that plaintiff in error was thereby deprived of his property without due process of law. The essential elements of due process, namely, the right to appear and to be heard in defense of the action in which plaintiff in error's property was attached, are lacking here. *Eckerson* v. *Board of Trustees of Haverstraw*, 151 N. Y. 75; *City of Rochester* v. *Holden*, 224 N. Y. 386, 396; *Hovey* v. *Elliott*, 167 U. S. 409; *McVeigh* v. *United States*, 11 Wall. 259; *Windsor* v. *McVeigh*, 93 U. S. 274; *Scott* v. *McNeal*, 154 U. S. 34; *Roller* v. *Holly*, 176 U. S. 398, 408, 409; *Central of Georgia Ry. Co.* v. *Wright*, 207 U. S. 127; *Londoner* v. *Denver*, 210 U. S. 373, 385; *Denver* v. *State Investment Co.*, 49 Colorado, 244; *Wetmore* v. *Karrick*, 205 U. S. 141; *Ochoa* v. *Hernandez*, 230 U. S. 139, 161; *Riverside Mills* v. *Menefee*, 237 U. S. 189; *Pennington* v. *Fourth National Bank*, 243 U. S. 269, 270, 273; *Saunders* v. *Shaw*, 244 U. S. 317; *Coe* v. *Armour Fertilizer Works*, 237 U. S. 413.

The contention that the foreign attachment laws of Delaware derive their existence from the Custom of London and date from the colonial period, even if sound, cannot avail against the prohibition of the Fourteenth Amendment. The Delaware statute as interpreted does not provide the safeguards that constituted the essential features of the Custom of London. [Quoting Drake on Attachment, Sergeant on Foreign Attachments, Locke on Foreign Attachment, and pointing out variances between the Delaware statute and the Custom of London.] But even if, at the time of its enactment, the statute were to be regarded as a statutory adoption of the local law of London, it ceased to be valid when the Fourteenth Amendment went into effect, especially in view of the departure in the other States of the Union from the practice of permitting property to be seized in foreign attachment without affording the defendant an opportunity to appear and litigate the plaintiff's claim even though no security for the payment of any judgment that might be

recovered was given. [Attachment laws of Pennsylvania, New York, Illinois, and New Jersey.] The legislation of these States is typical of that elsewhere. It accomplishes the primary purpose of attachment laws, that of securing the appearance of a defendant, and at the same time effectuates the secondary object of securing for the plaintiff a lien on the property of the defendant which continues until it is dissolved either because the statutory prerequisites to a valid attachment have not been complied with or in consequence of the giving of a bond by the defendant for the purpose of procuring a dissolution of the attachment. This procedure conforms with due process of law. It affords a defendant the right to a hearing before his property is condemned. It enables him to respond to the citation that summons him into court without the imposition of an onerous or impossible condition. See 1 Shinn on Attachment and Garnishment, §§ 95, 191, 221, 442, 449.

Even if it were assumed that the Delaware statute was in exact conformity with the Custom of London, there has been such a departure from it in the general legislation of the several States that it must be regarded as opposed to the genius of our institutions. In any event, there is such a repugnancy between the Delaware statute, as interpreted, and the Fourteenth Amendment, that the latter must be regarded as having modified the statute so as to eliminate the unconstitutional features of the law. *Neal* v. *Delaware*, 103 U. S. 370; *Ex parte Yarbrough*, 110 U. S. 651, 665; *Guinn* v. *United States*, 238 U. S. 347, 363; *Kentucky Railroad Tax Cases*, 115 U. S. 321–334; *East St. Louis* v. *Amy*, 120 U. S. 600; *Kaukauna Co.* v. *Green Bay Canal Co.*, 142 U. S. 254; *Wilkins* v. *Jewett*, 139 Massachusetts, 29; *Hamilton* v. *Kentucky Distilleries Co.*, 251 U. S. 146, 162.

The cases of *Murray's Lessee* v. *Hoboken Land & Improvement Co.*, 18 How. 272–280; *McMillen* v. *Anderson*,

95 U. S. 37; *Central Loan & Trust Co.* v. *Campbell Co.*, 173 U. S. 84; *Capital Traction Co.* v. *Hof*, 174 U. S. 1; and *Anderson* v. *Henry*, 45 W. Va. 319, relied upon by defendants in error, do not sustain their position.

The Delaware statute deprived plaintiff in error of the equal protection of the laws, since, under the interpretation given to it, he was debarred from appearing and defending without first giving special bail, whilst under the express terms of the statute a foreign corporation may appear and answer without the necessity of giving bail. *Cotting* v. *Kansas City Stock Yards Co.*, 183 U. S. 79; *Connolly* v. *Union Sewer Pipe Co.*, 184 U. S. 540, 560; *Gulf, Colorado & Santa Fe Ry. Co.* v. *Ellis*, 165 U. S. 150; *Farrington* v. *Mensching*, 187 N. Y. 8. See also *Fort Smith Lumber Co.* v. *Arkansas*, 251 U. S. 532; *Royster Guano Co.* v. *Virginia*, 253 U. S. 412; *Bogni* v. *Perotti*, 224 Massachusetts, 152; *Phipps* v. *Wisconsin Central Ry. Co.*, 133 Wisconsin, 153.

Mr. Willard Saulsbury and *Mr. Harlan F. Stone* for defendants in error:

If the bail demanded by the plaintiff in the attachment below had been excessive, it would have been reduced and fixed at the proper amount by the court to its satisfaction on the application of the defendant.

The real purpose of the effort of the defendant below to enter a general appearance was to transform the action from a proceeding *in rem* to an action *in personam* and thus free the attached property from the attachment.

By settled procedure of the common law a defendant cannot plead in bailable actions until he has appeared by giving bail.

Appearance can be effected at common law both in actions of debt and in proceedings begun by foreign attachment only by putting in special bail.

A state statute requiring appearance to be made by putting in special bail does not violate the due process clause of the Fourteenth Amendment. The process of law known as foreign attachment is not prohibited by the due process clause. A process of law is due process within the meaning of constitutional limitations if it can show the sanction of settled usage both in this country and in England.

A process of law which conforms to the statutes and decisions of a State and under which the defendant is given opportunity for defense in accordance with settled procedure of the State, will not be held unconstitutional merely because the defense might be made easier or more convenient for the defendant by a different procedure.

That part of the procedure of the defendants in error in the Delaware courts, attacked by the plaintiff in error, is not the procedure on foreign attachment peculiar to the Custom of London, but is the practice adopted both under the Custom of London and by the common law and by modern statutes requiring appearance by special bail in actions of debt to recover more than $50.

The plaintiff in error is not within the jurisdiction of Delaware within the meaning of the term "jurisdiction" as used in the guaranty of equal protection given by the Fourteenth Amendment; nor is he deprived of the equal protection of the laws.

MR. JUSTICE PITNEY delivered the opinion of the court.

This writ of error brings under review a judgment of the Supreme Court of the State of Delaware affirming a judgment of the Superior Court in a proceeding brought by defendants in error by foreign attachment against the property of plaintiff in error pursuant to the statutes of that State.

Proceedings were commenced in the Superior Court

December 23, 1915, by the filing of an affidavit entitled in the cause, made by one Joyce, a credible person, and setting forth that defendant Ownbey resided out of the State and was justly indebted to plaintiffs in a sum exceeding fifty dollars. Thereupon a writ of foreign attachment was issued to the sheriff of New Castle County, which plaintiffs caused to be indorsed with a memorandum to the effect that special bail was required in the sum of $200,000, and under which the sheriff attached 33,324$^1/_3$ shares of stock (par value $5 each) held and owned by defendant in the Wootten Land & Fuel Company, a Delaware corporation, and made a proper return. Plaintiffs filed a declaration demanding recovery of $200,000, counting upon a combination of the common money counts in assumpsit. Whether such pleading was required or even permitted by the statutes is questionable; but this is not material for present purposes. Not long afterwards defendant, by attorneys, without giving security, went through the form of entering a general appearance, and filed pleas of *non assumpsit*, the statute of limitations, and payment. Plaintiffs' attorneys moved to strike out the appearance and pleas on the ground that special bail or security as required by the statute in suits instituted by attachment had not been given. To this motion defendant filed a written response setting up that the Wootten Land & Fuel Company, although a Delaware corporation, was engaged in coal mining and all its other activities and business in the States of Colorado and New Mexico, where it had large and valuable property; that defendant was a resident of Colorado, and the stock in said company attached in this case constituted substantially all his property; that the company was in the hands of a receiver, and because of this the market value of the shares attached was temporarily destroyed, so that they were unavailable for use in obtaining the required bail or security to procure the discharge of the

shares from attachment, and that it was impossible for defendant to secure bail or security in the sum of $200,000, or any adequate sum, for the release of the shares so attached; that defendant had a good defense, in that there was no indebtedness upon any account or in any sum due from him to plaintiffs; that by the true construction of the Delaware statutes the entry of bail or security for the discharge of the property attached was not a necessary prerequisite to the entry of defendant's appearance, and such appearance might be made without disturbing the seizure of property under the writ or its security for any judgment finally entered; and that if the statutes could not be so construed as to permit appearance and defense in a case begun by foreign attachment without the entry of bail or security for the discharge of the property seized, they were unconstitutional under the first section of the Fourteenth Amendment, in that (a) they abridged the privileges and immunities of citizens of the United States; (b) deprived defendants in cases brought under them of property without due process of law; and (c) denied to such defendants the equal protection of the laws.

Upon motion of plaintiffs this response and the attempted appearance and pleas of defendant were struck out upon the ground that special bail or security as required by the statute had not been given by defendant or any person for him; the Court in Banc holding that in a foreign attachment suit against an individual there could be no appearance without entering "special bail," that the requirement to that effect was not arbitrary or unreasonable, and the statute was not unconstitutional. 29 Delaware (6 Boyce), 379, 398–406.

Thereupon judgment in favor of plaintiffs and against defendant for want of appearance was ordered, collectible only from the property attached, the amount to be ascertained by inquisition at bar. The inquisition afterwards proceeded, and resulted in the finding of damages

to the amount of $200,168.57, for which final judgment was entered.

Defendant repeatedly asked that the proceedings be opened and he permitted to appear and disprove or avoid plaintiffs' debt or claim, saying that shortly after the issuance of the writ of attachment, and as soon as advised thereof, he had proceeded to Delaware, retained counsel, and used every possible effort to secure bail in the sum of $200,000, offering the attached stock as collateral security to indemnify a surety, but because the property of the Wootten Company was in the hands of a receiver he had found it impossible to obtain any surety; and that he was not at present nor was he at the time of the issuance of the writ of foreign attachment indebted to plaintiffs in any sum whatever, but had a just and legal defense to the whole of the alleged cause of action. These applications were denied, upon opinions of the Court in Banc (29 Delaware [6 Boyce], 417, 434–436), and the Superior Court ordered the shares of stock in question sold in order to satisfy the debt, interest, and costs.

The Supreme Court affirmed the judgment (30 Delaware (7 Boyce), 297, 323, and the case comes here upon the contention that the statutes of Delaware, as thus construed and applied, are repugnant to the first section of the Fourteenth Amendment.

The statutes are found in Delaware Rev. Code, 1915, and the provisions bearing upon the controversy are set forth in the margin.[1]

---

[1] 4142. Sec. 25. A writ of foreign attachment may be issued against any person not an inhabitant of this State, . . . upon affidavit made by the plaintiff, or some other credible person, and filed with the Prothonotary, that the defendant resides out of the State, and is justly indebted to the said plaintiff in a sum exceeding fifty dollars. . . .

4145. Sec. 28. The said writ shall be framed, directed, executed and returned, and like proceedings had, as in the case of a domestic attachment, except as to the appointment of auditors and distribution among creditors; for every plaintiff in a foreign attachment shall have

The principal contention is based upon the "due process of law" clause of the Fourteenth Amendment. It is said the essential element of due process—the right to appear and be heard in defense of the action—is lacking. But the statute in plain terms gives to defendant the

---

the benefit of his own discovery, and, after judgment, may proceed, by order of sale, *fieri facias, capias ad satisfaciendum* or otherwise, as on other judgments.

Provided, that before receiving any sum under such judgment, the plaintiff shall enter into recognisance as required by section 18 preceding.

4135. Sec. 18. Provided, that before any creditor shall receive any dividend, or share, so distributed, he shall, with sufficient surety, enter into recognisance to the debtor, before the Prothonotary, in a sufficient sum, to secure the repayment of the same or any part thereof, if the said debtor shall, within one year thereafter, appear in the said Court and disprove or avoid such debt, or such part thereof.

The proceeding for this purpose may be by motion to the Court, and an issue framed and tried before the same.

4123. Sec. 6. If the defendant in the attachment, or any sufficient person for him, will, at any time before judgment, appear and give security to the satisfaction of the plaintiff in such cause, or to the satisfaction of the court and to all actions brought against such defendant, to the value of the property, rights, credits and monies attached, and the costs, then the garnishees and all property attached shall be discharged. The security may be taken thus: "On the.....day of .....19.., A. B. becomes security in the sum of.....that C. D. shall answer the demand of E. F. in this suit, and shall satisfy any judgment to the extent of the value of the property attached, that may be recovered against him therein"; which entry, on the appearance docket, shall be signed by the security, and shall be an obligation of record of the same force and effect, and subject to the same remedy by an action of debt, as any other obligation for the payment of money may be.

4137. Sec. 20. Judgment shall be given for the plaintiff in the attachment the second term after issuing the writ, unless the defendant shall enter special bail as aforesaid; whereupon, the court shall make an order that the sheriff shall sell the property attached, on due notice, and pay the proceeds (deducting legal costs and charges) to the auditors for distribution.

4143. Sec. 26. A writ of foreign attachment may be issued out of

opportunity to appear and make his defense, conditioned only upon his giving security to the value of the property attached. Hence the question reduces itself to whether this condition is an arbitrary and unreasonable requirement, so inconsistent with established modes of administering justice that it amounts to a denial of due process. And this must be determined not alone with reference

---

the Superior Court of this State against any corporation, aggregate or sole, not created by or existing under the laws of this State, upon affidavit made by the plaintiff or any other credible person, and filed with the Prothonotary of said Court, that the defendant is a corporation not created by, or existing under the laws of this State, and is justly indebted to the said plaintiff in a sum of money, to be specified in said affidavit, and which shall exceed fifty dollars.

The said writ shall be framed, directed, executed and returned, and like proceedings had as in the case of a foreign attachment issued under the next foregoing section, except that attachments to be issued under this section shall be dissolved only in the manner hereinafter provided.

In any attachments to be issued under this section, judgment shall be given for the plaintiff at the second term after the issuing of the writ, unless the defendant shall have caused an appearance by attorney to be entered, in which case the like proceedings shall be had, as in suits commenced against a corporation by summons; Provided, however, if the defendant in the attachment or any sufficient person for him, shall, at any time before judgment, give security for the payment of any judgment that may be recovered in said proceedings with costs, then the garnishees and all the property attached, shall be discharged, and the attachment dissolved, and like proceedings be had as in other cases of foreign attachment, in which the attachment has been dissolved by special bail. . . .

4150. Sec. 33. The shares of any person in an incorporated company, with all the rights thereto belonging, shall be subject to attachment as provided by Sections 95 to 99, inclusive, of Chapter Sixty-five. [The reference is to Rev. Code, §§ 2009–2013, which prescribe the method of attaching stock, selling it under such attachment, and passing title thereto].

1986. Sec. 72. For all purposes of title, action, attachment, garnishment and jurisdiction of all courts held in this State, but not for the purpose of taxation, the situs of the ownership of the capital stock of all corporations existing under the laws of this State, whether organized under this Chapter or otherwise, shall be regarded as in this State.

to a case of peculiar hardship arising out of exceptional circumstances, but with respect to the general effect and operation of the system of procedure established by the statutes.

The act concerning foreign attachments has been upon the statute books of Delaware since early colonial days. Like the attachment acts of other States, it traces its origin to the Custom of London, under which a creditor might attach money or goods of the defendant either in plaintiff's own hands or in the custody of a third person, by proceedings in the mayor's court or in the sheriff's court. The subject is treated at large in Bohun's *Privilegia Londini* (3d ed., 1723), pp. 253, *et seq.* See also Bac Abr. (Bouv. ed.), *tit.* Customs of London (H); Com. Dig. (4th ed.) *tit.* Attachment, Foreign, (A); Pulling, Laws & Customs of London (2d ed.) 187 *et seq.;* Serg. Attach., Appendix, pp. 205, *et seq.* As is said in Drake on Attachment, § 3: "This custom, notwithstanding its local and limited character, was doubtless known to our ancestors, when they sought a new home on the Western continent, and its essential principle, brought hither by them, has, in varied forms, become incorporated into the legal systems of all our States; . . . Our circumstances as a nation have tended peculiarly to give importance to a remedy of this character. The division of our extended domain into many different States, each limitedly sovereign within its territory, inhabited by a people enjoying unrestrained privilege of transit from place to place in each State, and from State to State; taken in connection with the universal and unexampled expansion of credit, and the prevalent abolishment of imprisonment for debt; would naturally, and of necessity, lead to the establishment, and, as experience has demonstrated, the enlargement and extension, of remedies acting upon the property of debtors."

By the Custom a defendant could not appear or raise

an issue about the debt claimed without entering special bail, or else surrendering his body. *Andrews* v. *Clerke*, Carth. 25, 26. Hence it naturally came about that the American colonies and States, in adopting foreign attachment as a remedy for collecting debts due from non-resident or absconding debtors, in many instances made it a part of the procedure that if defendant desired to enter an appearance and contest plaintiff's demand he must first give substantial security, usually in the form of special bail. Besides Delaware, this was true of New Jersey (Pat. L., p. 296, § 7; p. 298, § 16; *Watson* v. *Noblett*, 65 N. J. L. 506, 508); Pennsylvania (*McClenachan* v. *McCarty*, 1 Dall. 375, 378); Maryland (*Campbell* v. *Morris*, 3 Harr. & McH. 535, 552–553); Virginia (*Tiernans* v. *Schley*, 2 Leigh, 25, 29); North Carolina (*Britt* v. *Patterson*, 9 Ired. 197, 200; *Alexander* v. *Taylor*, 62 N. Car. 36, 38); South Carolina (*Acock* v. *Linn*, 1 Harp. 368, 369–370; *Fife & Co.* v. *Clarke*, 3 McCord, 347, 352; *Callender & Co.* v. *Duncan*, 2 Bailey, 454); Tennessee (*Boyd* v. *Buckingham & Co.*, 10 Humph. 434, 437); and Ohio (1 Chase's Stat. 462, § 15, cited by counsel in *Voorhees* v. *Bank of United States*, 10 Pet. 449, 453).

As to the legislation in Delaware, where the system is authoritatively deduced from the Custom of London (*Reybold* v. *Parker*, 6 Houst. 544, 555; *Reynolds* v. *Howell*, 1 Marvel, 52, 59; *Fowler* v. *Dickson*, 24 Del. [1 Boyce] 113, 119), not stopping to trace early colonial laws mentioned in *Reybold* v. *Parker*, *supra* (p. 553), we find that an act providing for proceedings by attachment against non-resident as well as against absconding debtors was passed by the Assembly of the Delaware Counties and the Province of Pennsylvania March 24, 1770 (Del. Laws 1753–1777, pp. 165, 174); was supplemented by Acts of the Legislature of the State of Delaware, January 31, 1817 (Del. Laws 1817, p. 232, c. 133), and January 27, 1823 (Del. Laws 1822–1824, p. 261, c. 162); and found

its way, without change material to the present purpose, into Delaware Rev. Code, 1852, as c. 104. By § 3 (Code, § 2266) a defendant desiring to enter appearance was required to put in special bail to the value of the property attached.

In 1856 it was held by the Superior Court that the act did not extend to foreign corporations; and this because a corporation could not put in special bail or be surrendered to bail when it appeared, and, in the absence of provision for the security to be given, it must be held that the statute did not contemplate or include the case of such a corporation. *Vogle* v. *New Granada Canal Co.*, 1 Houst. 294, 299. To remedy this, a supplement was enacted March 2, 1857 (11 Del. Laws, 482, c. 426), providing that the writ might be issued against a foreign corporation and like proceedings be had thereon as in other cases, except that the attachment should be dissolved only by defendant bringing into court the sum of money specified as the plaintiff's demand in the affidavit on which the writ was issued, or giving security for the payment of any judgment recovered; but that an appearance might be entered for defendant without bringing in the money or giving the security mentioned, in which case the writ should continue to bind the property attached. An amendment passed March 17, 1875 (15 Del. Laws, 305, 306, cc. 181, 182), eliminated the express provision for appearance without dissolving the attachment, and amended the provision as to the form of security to be given, leaving the section to stand as it appears in Del. Rev. Code 1915, 4143, § 26, quoted in the margin, *supra*. Notwithstanding this amendment, it seems to be thought that in attachment against a foreign corporation the entry of security is still not a prerequisite to appearance, and necessary only if it be desired to discharge the garnishees and the property attached (2 Woolley Del. Prac., § 1293); and in favor of plaintiff in error we shall so assume.

Meantime, the provision requiring a non-resident individual to enter special bail as a condition of making appearance remained as before until March 6, 1877, when the legislature substituted a provision requiring security to be given to the satisfaction of the plaintiff or of the court to the value of the property attached and costs, conditioned that defendant answer the plaintiff's demand and satisfy any judgment recovered, to the extent of the value of the property attached (15 Del. Laws, 612, c. 473). In this form it is found in Del. Rev. Code 1915, 4123, § 6, quoted in the margin, *supra*.

It will be seen that from the beginning the giving of security, either in the form of special bail or a substituted undertaking for the payment of the judgment, has been made a condition precedent to the entering of appearance and making defense upon the merits by a non-resident individual defendant whose property was taken under foreign attachment. In the present case the Court in Banc called attention to the hardship occasionally arising from this, and suggested that the legislature provide a remedy (29 Del. [6 Boyce] 435). There followed an amendatory act of March 23, 1917 (29 Del. Laws, 844, c. 258), permitting an appearance and defense without the giving of special security, but leaving the lien upon the property attached to remain as security *pro tanto;* which was made to apply, subject to conditions, to all suits instituted (as this one was) after January 1, 1915. Whether plaintiff in error was at liberty to avail himself of this statute we are not advised; and for present purposes it will be disregarded.

The courts of Delaware at all times have laid emphasis upon the difference between the original character of a suit by foreign attachment, treating it as an *ex parte* proceeding *quasi in rem*, looking to a judgment of condemnation against the property attached and having the incidental object of compelling defendant's appearance—

on the one hand—and the action *in personam*, with its appropriate incidents, that resulted from an appearance by defendant accompanied by the giving of security—on the other. *Wells* v. *Shreve's Administrator* (1861), 2 Houst. 329, 369–370; *Frankel* v. *Satterfield* (1890), 9 Houst. 201, 209; *National Bank of Wilmington & Brandywine* v. *Furtick* (1895), 2 Marvel, 35, 51. Recognizing the fundamental character of this distinction, and regarding the foreign attachment in Delaware as wholly statutory, the courts have not felt at liberty, in the absence of legislation, to give to the proceeding a hybrid character by permitting an appearance without security other than the property attached, leaving this to answer *pro tanto* the plaintiff's demand.

The requirement of special bail as a condition of appearance was long familiar in bailable actions at common law and in admiralty proceedings. In requiring such bail from a non-resident defendant whose goods had been seized and who desired to be heard to contest the plaintiff's demand, Delaware did but follow familiar precedents and analogies, besides conforming to the Custom. It is not contended that the substitution, by the 1877 amendment, of a bond conditioned for payment of the judgment to the extent of the value of the property attached, in lieu of the special bail formerly required on entering appearance, made a substantial difference rendering the new requirement any more obnoxious to the due process clause than the earlier. It is the imposing of any condition whatever upon the right to be heard that is complained of.

Hence the question is whether the State, in thus adopting a time-honored method of procedure and preserving as a part of it a time-honored requirement of security, and in adhering logically to the ancient distinction between a proceeding *quasi in rem* and an action *in personam*, to the extent of refraining, until the amendment of 1917, from enacting legislation recognizing the peculiar appeal

of a defendant who may have no resources or credit aside from the property attached, must be regarded as having deprived such a defendant of his property without due process of law, in contravention of the Fourteenth Amendment. In our opinion, the question must be answered in the negative.

In *Murray's Lessee* v. *Hoboken Land & Improvement Co.*, 18 How. 272, 276, 280, which arose under the due process clause of the Fifth Amendment, the court, by Mr. Justice Curtis, declared (pp. 276–277): "The Constitution contains no description of those processes which it was intended to allow or forbid. It does not even declare what principles are to be applied to ascertain whether it be due process. . . . To what principles, then, are we to resort to ascertain whether this process, enacted by Congress, is due process? To this the answer must be twofold. We must examine the Constitution itself, to see whether this process be in conflict with any of its provisions. If not found to be so, we must look to those settled usages and modes of proceeding existing in the common and statute law of England, before the emigration of our ancestors, and which are shown not to have been unsuited to their civil and political condition by having been acted on by them after the settlement of this country."

In *Pennoyer* v. *Neff*, 95 U. S. 714, 722–724, it was shown that the process of foreign attachment has its fundamental basis in the exclusive jurisdiction and sovereignty of each State over persons and property within its borders; and although emphasis was there laid upon the authority and duty of a State to protect its own citizens in their claims against non-resident owners of property situate within the State, it is clear that, by virtue of the "privileges and immunities" clause of § 2 of Art. IV of the Constitution, each State is at liberty, if not under a duty, to accord the same privilege of protection to creditors

who are citizens of other States that it accords to its own citizens. *Blake* v. *McClung*, 172 U. S. 239, 248, *et seq.*

The record before us shows no judgment entered against plaintiff in error *in personam*, but only one for carrying into effect a lien imposed upon his interest in property within the jurisdiction of the State for the purpose of satisfying a demand made against him as a non-resident debtor, and established to the satisfaction of the court. And an analysis of his contentions shows that the real complaint was and is, not that there was any departure, arbitrary or otherwise, from the due and orderly course of procedure provided by the statutes of Delaware long before the case arose; but rather that the courts of the State declined to recognize the peculiar hardship of his case as sufficient ground for relaxing in his behalf the established legal procedure. His appeal in effect was to the summary and equitable jurisdiction of a court of law so to control its own process and proceedings as not to produce hardship. This is a recognized extraordinary jurisdiction of common-law courts, distinguishable from their ordinary or formal jurisdiction. It has been much developed since the separation of the American Colonies from England. But, where the proceedings have been regular, it is exercised as a matter of grace or discretion, not as of right, and is characterized by the imposition of terms on the party to whom concession is made. Smith's Action at Law, 4th ed. (1851), pp. 22–27; Stewart's Blackstone (1854), vol. 3, pp. 334–338. A liberal exercise of this summary and equitable jurisdiction, in the interest of substantial justice and in relaxation of the rigors of strict legal practice, is to be commended; but it cannot be said to be essential to due process of law, in the constitutional sense.

The due process clause does not impose upon the States a duty to establish ideal systems for the administration of justice, with every modern improvement and with

provision against every possible hardship that may befall. It restrains state action, whether legislative, executive, or judicial, within bounds that are consistent with the fundamentals of individual liberty and private property, including the right to be heard where liberty or property is at stake in judicial proceedings. But a property owner who absents himself from the territorial jurisdiction of a State, leaving his property within it, must be deemed *ex necessitate* to consent that the State may subject such property to judicial process to answer demands made against him in his absence, according to any practicable method that reasonably may be adopted. A procedure customarily employed, long before the Revolution, in the commercial metropolis of England, and generally adopted by the States as suited to their circumstances and needs, cannot be deemed inconsistent with due process of law, even if it be taken with its ancient incident of requiring security from a defendant who after seizure of his property comes within the jurisdiction and seeks to interpose a defense. The condition imposed has a reasonable relation to the conversion of a proceeding *quasi in rem* into an action *in personam;* ordinarily it is not difficult to comply with—a man who has property usually has friends and credit—and hence in its normal operation it must be regarded as a permissible condition; and it cannot be deemed so arbitrary as to render the procedure inconsistent with due process of law when applied to a defendant who, through exceptional misfortune, is unable to furnish the necessary security; certainly not where such defendant—as is the case now presented, so far as the record shows—has acquired the property-right and absented himself from the State after the practice was established, and hence with notice that his property situate there would be subject to disposition under foreign attachment by the very method that afterwards was pursued, and that he would have no right to

enter appearance and make defense except upon giving security.

However desirable it is that the old forms of procedure be improved with the progress of time, it cannot rightly be said that the Fourteenth Amendment furnishes a universal and self-executing remedy. Its function is negative, not affirmative, and it carries no mandate for particular measures of reform. For instance, it does not constrain the States to accept particular modern doctrines of equity, or adopt a combined system of law and equity procedure, or dispense with all necessity for form and method in pleading, or give untrammelled liberty to make amendments. Neither does it, as we think, require a State to relieve the hardship of an ancient and familiar method of procedure by dispensing with the exaction of special security from an appearing defendant in foreign attachment.

We conclude that the statutes under consideration were not in conflict with the due process provision of the Fourteenth Amendment.

Under the equal protection clause it is contended that there is unwarranted discrimination in debarring an individual from appearing and making defense without first giving special security, while a foreign corporation may appear and answer without giving any security, except for the lien of the process upon the property attached. But, as we have seen, the difference in treatment was resorted to because from their nature corporations could not put in special bail or be surrendered thereunder. This was a reasonable ground for separating defendants into two classes—individuals and corporations; and it was natural that in subsequent legislation the classes should be separately treated, as was done. There is here no denial of the equal protection of the laws, within the meaning of the Fourteenth Amendment.

The objection that the acts abridge the privileges and

immunities of citizens of the United States, within the meaning of the same Amendment, is not pressed, and plainly is untenable. As has been pointed out repeatedly, the privileges and immunities referred to in the Amendment are only such as owe their existence to the Federal Government, its national character, its Constitution, or its laws. *Maxwell* v. *Bugbee*, 250 U. S. 525, 537–538, and cases cited. The privileges and immunities of plaintiff in error alleged to be abridged by the statutes in question have no such federal origin.

The judgment under review is

Affirmed.

MR. JUSTICE MCREYNOLDS concurs in the result.

THE CHIEF JUSTICE and MR. JUSTICE CLARKE dissent.

ECONOMY LIGHT & POWER COMPANY v. UNITED STATES.

APPEAL FROM THE CIRCUIT COURT OF APPEALS FOR THE SEVENTH CIRCUIT.

No. 104. Argued December 17, 1920.—Decided April 11, 1921.

1. Artificial obstructions subject to abatement by public authority do not render non-navigable in law a stream which in its natural state would be navigable in fact. P. 118.
2. The authority of Congress to prohibit added obstructions to a navigable stream is not lost by omission to take action in previous cases. P. 118.
3. The Desplaines River in Illinois which was used from a very early day to about the year 1825 as a link in a well-known route between Lake Michigan and the Mississippi, in the transportation of furs and supplies by canoes and other light-draft boats, but has not since

been used for transportation and is not thus useful under existing conditions, *held* a navigable water of the United States and within the act of Congress forbidding unauthorized obstructions. Act of March 3, 1899, c. 425, § 9, 30 Stat. 1151. Pp. 117, 123.

4. The public interest in navigable streams of this character in Illinois and neighboring States, and the federal authority over such as are capable of serving interstate commerce, arises not from custom or implication, but from the declaration of the 4th Article of the compact in the Ordinance of July 13, 1787, for the government of the Northwest Territory, that the navigable waters leading into the Mississippi and St. Lawrence, and the carrying places between the same, shall be common highways and forever free, etc.,—a principle which was reiterated in later acts of Congress and accepted by Illinois in her constitution at the time of her admission as a State. P. 118.
5. In so far as the Ordinance of 1787 thus established public rights of highway in navigable waters capable of bearing commerce from State to State, it was no more subject to repeal by a State than any other regulation of interstate commerce enacted by Congress. P. 120.
6. The power of the States to regulate such navigable waters is plenary within their borders until Congress intervenes, but Congress has the power to assume entire control whenever it chooses, unhampered by previous acts of the States, and this supreme authority applies to States formed out of the Northwest Territory as well as to others, and may be exercised through general as well as special laws. P. 121.
7. A river may be navigable in law though it contain natural obstructions and though it be not open to navigation at all seasons or at all stages of water. P. 121.
8. A decision of a state Supreme Court holding a river not navigable in its natural condition does not bind the United States if it was not a party to the suit. P. 123.
9. A river having actual navigable capacity in its natural state and capable of carrying commerce among the States is within the power of Congress to preserve for purposes of future transportation, even though it be not at present used for such commerce and be incapable of such use according to present methods, either by reason of changed conditions or because of artificial obstructions. P. 123.
10. The provisions of § 9 of the Act of March 3, 1899, *supra*, applicable in terms to "*any* navigable river or other navigable water of the United States," cannot be limited to such waters as were at the date of the act, or as now are, actually open to use. P. 123.
11. Where there was no application under the statute, but the party

desiring to build a dam merely submitted its plans to the Secretary of War at an informal hearing and assured him that the stream was not navigable, *held* that his refusal to act, upon the ground that that condition left the stream without his jurisdiction, imported neither an approval of the project nor an inquiry concerning navigability. P. 124.

256 Fed. Rep. 792, affirmed.

THE case is stated in the opinion.

Mr. Frank H. Scott for appellant.

Mr. Clarence N. Goodwin, Special Assistant to the Attorney General, with whom *The Solicitor General* was on the brief, for the United States.

MR. JUSTICE PITNEY delivered the opinion of the court.

This was a suit brought by the United States against appellant in the District Court for the Northern District of Illinois, Eastern Division, for an injunction to restrain defendant from constructing a dam in the Desplaines River at a point in Grundy County, Illinois, without the consent of Congress or authority of the legislature of the State, and without approval of the location and plans by the Chief of Engineers and the Secretary of War of the United States. Relief was prayed upon two grounds: (1) that the river bed where the dam was being constructed was the property of the United States; (2) that the Desplaines River was a navigable waterway of the United States, and the proposed construction of a dam therein was in violation of the Act of Congress of March 3, 1899, c. 425, § 9, 30 Stat. 1121, 1151. The first ground was overruled by the District Court and disregarded by the Circuit Court of Appeals. We need not consider it further. The second ground was sustained by the District Court, and its final decree granting an injunction was

affirmed by the Circuit Court of Appeals, 256 Fed. Rep. 792. The present appeal followed.

Section 7 of Act of September 19, 1890, c. 907, 26 Stat. 426, 454, makes it unlawful to build any dam or other structure in any navigable river or other waters of the United States, so as to obstruct or impair navigation, without permission of the Secretary of War. Section 9 of the Act of March 3, 1899 (30 Stat. 1151) declares: "That it shall not be lawful to construct or commence the construction of any bridge, dam, dike, or causeway over or in any . . . navigable river, or other navigable water of the United States until the consent of Congress to the building of such structures shall have been obtained and until the plans for the same shall have been submitted to and approved by the Chief of Engineers and by the Secretary of War: *Provided*, That such structures may be built under authority of the legislature of a State across rivers and other waterways the navigable portions of which lie wholly within the limits of a single State, provided the location and plans thereof are submitted to and approved by the Chief of Engineers and by the Secretary of War before construction is commenced. . . ."

There is no contention that the consent of Congress for the building of the proposed dam has been obtained, that its construction has been authorized by the legislature of the State of Illinois, or that the location and plans have been submitted to and approved by the Chief of Engineers and the Secretary of War. The substantial defense is that the Desplaines River, at the site of the proposed dam, which is below the City of Joliet and just above the point where the Desplaines joins the Kankakee to form the Illinois River, is not navigable in fact and not within the description "navigable river, or other navigable water of the United States," as employed in the Act of 1899.

The District Court found that there was no evidence of actual navigation within the memory of living men, and that there would be no present interference with navigation by the building of the proposed dam. The Circuit Court of Appeals did not disturb this finding. 256 Fed. Rep. 792, 798. But both courts found that in its natural state the river was navigable in fact, and that it was actually used for the purposes of navigation and trading in the customary way, and with the kinds of craft ordinarily in use for that purpose on rivers of the United States, from early fur-trading days (about 1675) down to the end of the first quarter of the nineteenth century. Details are given in the opinion of the Circuit Court of Appeals, and need not be repeated. Suffice it to say that there was a well-known route by water, called the Chicago-Desplaines-Illinois route, running up the Chicago River from its mouth on Lake Michigan to a point on the west fork of the south branch; thence westerly by water or portage, according to the season, to Mud Lake, about 2 miles; thence to the Desplaines near Riverside, 2 miles; thence down the Desplaines to the confluence of that river with the Kankakee, where they form the Illinois River; thence down the Illinois to its junction with the Mississippi. During the period mentioned the fur trade was a leading branch of commerce in the western territory, and it was regularly conducted upon the Desplaines River. Supplies in large quantity and variety, needed by the early settlers, also were transported over this route between Chicago and St. Louis and other points. Canoes and other boats of various kinds were employed, having light draft but capable of carrying several tons each, and manned by crews of six or eight men. The route was navigated by the American Fur Company regularly during a period of years down to about 1825, after which it was disused because the trade had receded to interior portions of Illinois that could be reached

more conveniently with horses. Later, changes occurred in the river, due to the drainage of a swamp in the region of the portage, the clearing away of forests affecting the rainfall and the distribution of the run-off, and thus shortening the duration of the higher stages of water; the construction (under state authority) of the Illinois and Michigan Canal in 1848 and its deepening in 1866 to 1871, which diverted a part of the hill drainage towards the Chicago River; and the construction of the Sanitary and Ship Canal in 1892 to 1894.

But, in spite of these changes, the Circuit Court of Appeals finds (256 Fed. Rep. 804) that the Desplaines River is a continuous stretch of water from Riverside (at the Chicago divide) to its mouth; and although there is a rapid, and in places shallow water, with boulders and obstructions, yet these things do not affect its navigable capacity; that the same is true of the upper part of the Illinois River above the head of steamboat navigation; and that both streams are navigable and are within the Act of 1899.

Since about the year 1835 a number of dams have been built in the Desplaines, without authority from the United States, and one or more of them still remain; besides, a considerable number of bridges of various kinds span the river. The fact, however, that artificial obstructions exist capable of being abated by due exercise of the public authority, does not prevent the stream from being regarded as navigable in law, if, supposing them to be abated, it be navigable in fact in its natural state. The authority of Congress to prohibit added obstructions is not taken away by the fact that it has omitted to take action in previous cases.

The public interest in navigable streams of this character in Illinois and neighboring States, and the federal authority over such as are capable of serving commerce among the States, does not arise from custom or implica-

tion, but has a very definite origin. By Article 4 of the compact in the Ordinance of July 13, 1787, for the government of the territory northwest of the river Ohio, it was declared: "The navigable waters leading into the Mississippi and Saint Lawrence, and the carrying places between the same, shall be common highways, and forever free, as well to the inhabitants of the said territory, as to the citizens of the United States, and those of any other States that may be admitted into the confederacy, without any tax, impost, or duty therefor." 1 Stat. 51, 52, note; Rev. Stats. U. S., 1878 ed., pp. 13, 16. This was under the Confederation; but the first Congress under the new Constitution expressed a design to have it continue in full effect, in the Act of August 7, 1789, c. 8, 1 Stat. 50. A purpose to preserve the rights of public highway in the navigable rivers was again manifested in § 9 of Act of May 18, 1796, c. 29, 1 Stat. 464, 468. The Territory of Indiana (including what is now Illinois) was set apart and organized by Act of May 7, 1800, which in § 2 reiterated that purpose, (c. 41, 2 Stat. 58, 59); and in an act providing for the disposal of the public lands therein (Act of March 26, 1804, c. 35, § 6, 2 Stat. 277, 279–280), it was again declared "that all the navigable rivers, creeks and waters, within the Indiana territory, shall be deemed to be and remain public highways." Illinois was set apart and a separate territorial government established therein by Act of February 3, 1809, c. 13, 2 Stat. 514. By § 2, the government was to be "in all respects similar" to that provided by the Ordinance of 1787 and the Act of August 7, 1789, and the inhabitants were to enjoy all the rights, privileges, and conditions granted by the Ordinance. An Act to enable the people of Illinois to form a state government, approved April 18, 1818, c. 67, 3 Stat. 428, contained a proviso (§ 4, p. 430) that such government should not be repugnant to the Ordinance of 1787. The state constitution declared its purpose to

be consistent with the Ordinance, and the resolution of Congress declaring admission of the State into the Union (December 3, 1818, 3 Stat. 536) acknowledged that the constitution and state government were "in conformity to the principles of the articles of compact" in the Ordinance of 1787.

There can be no doubt that the waters of the Chicago-Desplaines-Illinois route "and the carrying places between the same" constituted one of the routes of commerce intended by the Ordinance, and the subsequent acts referred to, to be maintained as common highways. It did not make them navigable in law unless they were navigable in fact, but declared the public rights therein so far as they were navigable in fact; and it is curious and interesting that the importance of these inland waterways, and the inappropriateness of the tidal test in defining our navigable waters, was thus recognized by the Congress of the Confederation more than 80 years before this court decided *The Daniel Ball*, 10 Wall. 557, 563, and more than 60 years before *The Propeller Genesee Chief* v. *Fitzhugh*, 12 How. 443, 455.

To the extent that it pertained to internal affairs, the Ordinance of 1787—notwithstanding its contractual form—was no more than a regulation of territory belonging to the United States, and was superseded by the admission of the State of Illinois into the Union "on an equal footing with the original States in all respects whatever." *Permoli* v. *First Municipality*, 3 How. 589, 610; *Van Brocklin* v. *Tennessee*, 117 U. S. 151, 159; *Hawkins* v. *Bleakly*, 243 U. S. 210, 217. But, so far as it established public rights of highway in navigable waters capable of bearing commerce from State to State, it did not regulate internal affairs alone, and was no more capable of repeal by one of the States than any other regulation of interstate commerce enacted by the Congress; being analogous in this respect to legislation enacted under the exclusive power

of Congress to regulate commerce with the Indian tribes. *Pollard's Lessee* v. *Hagan*, 3 How. 212, 229–230; *Ex parte Webb*, 225 U. S. 663, 683, 690–691; *United States* v. *Sandoval*, 231 U. S. 28, 38.

Nothing inconsistent with this was decided in *Escanaba Co.* v. *Chicago*, 107 U. S. 678, 688–689; *Huse* v. *Glover*, 119 U. S. 543, 546; *Sands* v. *Manistee River Improvement Co.*, 123 U. S. 288, 295, 296; *Willamette Iron Bridge Co.* v. *Hatch*, 125 U. S. 1, 8–11. Those cases simply hold, in effect, that a State formed out of a part of the Northwest Territory has the same power to regulate navigable waters within its borders that is possessed by other States of the Union; that is to say, until Congress intervenes, the power of the State, locally exerted, is plenary; nevertheless, where the navigation serves commerce among the States or with foreign nations, Congress has the supreme power when it chooses to act, and is not prevented, by anything the States may have done, from assuming entire control in the matter. In short, that the rule laid down in *Willson* v. *Black-bird Creek Marsh Co.*, 2 Pet. 245, 252, and *Gilman* v. *Philadelphia*, 3 Wall. 713, 731, applies to States formed out of the Northwest Territory as well as to others. This is not questioned. But, as was recognized in the *Gilman Case* (p. 731), Congress may exercise its authority through general as well as through special laws, its power in either case being supreme. The Act of 1899 (30 Stat. 1151), upon which the present bill is founded, is a due assertion of the authority of Congress over all navigable waters within its jurisdiction; and it must be accorded due weight as such.

The Circuit Court of Appeals, in passing upon the question of navigability, correctly applied the test laid down by this court in *The Daniel Ball*, 10 Wall. 557, 563; and *The Montello*, 20 Wall. 430, 440–443; that is, the test whether the river, in its natural state, is used, or capable of being used as a highway for commerce, over which

trade and travel is or may be conducted in the customary modes of trade and travel on water. Navigability, in the sense of the law, is not destroyed because the watercourse is interrupted by occasional natural obstructions or portages; nor need the navigation be open at all seasons of the year, or at all stages of the water.

In *The Montello, supra,* the question was whether Fox River, in the State of Wisconsin, was a navigable water of the United States within the meaning of acts of Congress. Originally there were rapids and falls in the river, but these had been obviated by locks, canals, and dams, so as to furnish an uninterrupted water communication for steam vessels of a considerable capacity. It was argued (p. 440) that although since these improvements the river might be considered as a highway for commerce conducted in the ordinary modes, it was not so in its natural state, and therefore not navigable under the decision in *The Daniel Ball, supra.* The court, accepting navigability in the natural state of the river as the correct test, proceeded to show that, before the improvements resulting in an unbroken navigation, and when a few portages were necessary, a large and successful interstate commerce had been carried through the river by means of Durham boats; and, speaking by Mr. Justice Davis, proceeded to say (p. 441) that, even aside from the Ordinance of 1787, "the true test of the navigability of a stream does not depend on the mode by which commerce is, or may be, conducted, nor the difficulties attending navigation. If this were so, the public would be deprived of the use of many of the large rivers of the country over which rafts of lumber of great value are constantly taken to market. It would be a narrow rule to hold that in this country, unless a river was capable of being navigated by steam or sail vessels, it could not be treated as a public highway. The capability of use by the public for purposes of transportation and commerce affords the true criterion of the

navigability of a river, rather than the extent and manner of that use. If it be capable in its natural state of being used for purposes of commerce, no matter in what mode the commerce may be conducted, it is navigable in fact, and becomes in law a public river or highway." Proceeding to say (p. 442) that notwithstanding the fact that before the improvements there were obstructions to an unbroken navigation, which rendered the navigation difficult and prevented the adoption of modern agencies, commerce was successfully carried on, the court pointed out (p. 442) that the Ordinance of 1787 recognized "carrying-places" as a part of a navigable waterway.

Our attention is called to the fact that in *People* v. *Economy Power Co.*, 241 Illinois, 290, 320–338, the Supreme Court of Illinois held that the Desplaines in its natural condition is not a navigable stream; and it is intimated that we ought to follow that decision. A writ of error brought to review it was dismissed by us because no federal question was involved (234 U. S. 497, 510, 524). Of course, the decision does not render the matter *res judicata*, as the United States was not a party. The District Court in the present case treated it as not persuasive, because it appeared that evidence was wanting which is present here; and we cannot say that the court below erred in not following it.

We concur in the opinion of the Circuit Court of Appeals that a river having actual navigable capacity in its natural state and capable of carrying commerce among the States, is within the power of Congress to preserve for purposes of future transportation, even though it be not at present used for such commerce, and be incapable of such use according to present methods, either by reason of changed conditions or because of artificial obstructions. And we agree that the provisions of § 9 of the Act of 1899 (30 Stat. 1151) apply to such a stream. The act in terms applies to "*any* . . . navigable river, or other

navigable water of the United States"; and, without doing violence to its manifest purpose, we cannot limit its prohibition to such navigable waters as were, at the time of its passage, or now are, actually open for use. The Desplaines River, after being of practical service as a highway of commerce for a century and a half, fell into disuse, partly through changes in the course of trade or methods of navigation, or changes in its own condition, partly as the result of artificial obstructions. In consequence, it has been out of use for a hundred years; but a hundred years is a brief space in the life of a nation; improvements in the methods of water transportation or increased cost in other methods of transportation may restore the usefulness of this stream; since it is a natural interstate waterway, it is within the power of Congress to improve it at the public expense; and it is not difficult to believe that many other streams are in like condition and require only the exertion of federal control to make them again important avenues of commerce among the States. If they are to be abandoned, it is for Congress, not the courts, so to declare. The policy of Congress is clearly evidenced in the Act of 1899, and, in the present case at least, nothing remains but to give effect to it.

It is contended that, supposing the Desplaines is navigable, the purpose of the Act of 1899 was in effect accomplished because appellant or its predecessor, before proceeding with the enterprise, submitted the plans for the proposed dam to the War Department, and that Department "in substance gave its approval," although it did not formally approve the plans because it did not consider the Desplaines River a navigable water of the United States. It appears, however, that there was no application for an approval under the Act of 1899, and the Department was not called upon to exercise its jurisdiction under that act. There was an informal hearing before the Secretary, at which the representatives of

appellant, assuring him that the Desplaines was not a navigable stream either in law or in fact, and that the Department had no jurisdiction over it, asked not for a permit, but in effect for an assurance that no permit was necessary. The Secretary declined to act because, as the river was not navigable, he had no jurisdiction. We cannot regard this as equivalent to an approval, either in form or effect, or even as an official inquiry into the navigability of the river.

Decree affirmed.

MR. JUSTICE MCREYNOLDS took no part in the consideration or decision of this case.

WALL, ADMINISTRATRIX OF WALL, v. CHESAPEAKE & OHIO RAILWAY COMPANY.

ERROR TO THE SUPREME COURT OF THE STATE OF ILLINOIS.

No. 237. Argued March 21, 1921.—Decided April 11, 1921.

A federal question which could have been raised before but was first raised in the state Supreme Court by a petition for rehearing, which that court merely overruled, does not confer jurisdiction on this court.

Writ of error to review 290 Illinois, 227, dismissed.

THE case is stated in the opinion.

Mr. C. Paul Tallmadge, with whom *Mr. Almon W. Bulkley* and *Mr. Clair E. More* were on the brief, for plaintiff in error.

Mr. Worth E. Caylor for defendant in error.

MR. JUSTICE MCREYNOLDS delivered the opinion of the court.

An Illinois statute of 1903 amended the Act of 1853 which gave a right of action for wrongful death by adding thereto—"*Provided further*, that no action shall be brought or prosecuted in this State, to recover damages for a death occurring outside of this State." Our jurisdiction is invoked upon the theory that validity of the amending act was challenged below because of conflict with the Federal Constitution. But the point was not raised prior to the petition to the Supreme Court for a rehearing which was overruled without more. 290 Illinois, 227. It could have been presented earlier. According to the well established rule we may not now consider it; and the writ of error must be dismissed. *Godchaux Co.* v. *Estopinal*, 251 U. S. 179.

Dismissed.

BANK OF MINDEN ET AL. *v.* CLEMENT, ADMINISTRATRIX OF CLEMENT.

ERROR TO THE SUPREME COURT OF THE STATE OF LOUISIANA.

No. 238. Submitted March 21, 1921.—Decided April 11, 1921.

1. A life insurance policy payable to the executors, administrators or assigns of the insured is his property and subject to the claims of his creditors. P. 128.
2. A state law exempting policies so payable and their avails from the debts of the insured is invalid under Art. I, § 10, of the Constitution, as applied to his debt under a promissory note antedating the law and to policies also antedating it though later than the note. P. 129. *Sturges* v. *Crowninshield*, 4 Wheat. 122.

146 Louisiana, 385, reversed.

THE case is stated in the opinion.

Mr. Hampden Story, *Mr. J. S. Atkinson* and *Mr. Robert Roberts* for plaintiffs in error.

Mr. J. D. Wilkinson for defendant in error. *Mr. L. K. Watkins* was also on the brief.

MR. JUSTICE MCREYNOLDS delivered the opinion of the court.

By Act No. 189 of 1914, the Louisiana Legislature undertook to exempt from debts of the assured the avails of insurance upon his life when payable to his estate.

Before passage of that act and while indebted to plaintiffs in error banks by notes which were renewed from time to time until his death, O. P. Clement took out two policies upon his life with loss payable to his executors, administrators or assigns. He died in 1917 and his administratrix collected the stipulated sums amounting to $4,433.33. The succession was insolvent, and the banks sought to subject the insurance money to their claims, maintaining that if construed and applied so as to exempt such funds the Act of 1914 would impair the obligations of their contracts and violate § 10, Article I, Federal Constitution. The Supreme Court of the State held that acceptance of the renewal notes did not operate as novations, but that the statute protected the insurance money without violating the Federal Constitution since the exemption "impaired the obligation of the preëxisting contract very slightly and remotely." 146 Louisiana, 385.

Section 10, Article I, of the Constitution—"No State shall . . . pass any . . . law impairing the obligation of contracts"—has been much considered by this court and often applied to preserve the integrity of contractual obligations.

When the deceased took out the policies of insurance upon his life they became his property subject to claims of his creditors. *New York Mutual Life Ins. Co.* v. *Armstrong*, 117 U. S. 591, 597; *Central Bank of Washington* v. *Hume*, 128 U. S. 195, 204; *Burlingham* v. *Crouse*, 228 U. S. 459, 471, 472; *In re Coleman*, 136 Fed. Rep. 818; *In re Bonvillain*, 232 Fed. Rep. 372; *Blinn* v. *Dame*, 207 Massachusetts, 159; *In re Heilbron's Estate*, 14 Washington, 536; *Rice* v. *Smith*, 72 Mississippi, 42; *Skinner* v. *Holt*, 9 S. Dak. 427; Joyce on Insurance, § 2341.

In *Sturges* v. *Crowninshield*, 4 Wheat. 122, 197, 198, opinion by Mr. Chief Justice Marshall, it was said: "What is the obligation of a contract? and what will impair it? It would seem difficult to substitute words which are more intelligible, or less liable to misconstruction, than those which are to be explained. A contract is an agreement, in which a party undertakes to do, or not to do, a particular thing. The law binds him to perform his undertaking, and this is, of course, the obligation of his contract. . . . . Any law which releases a part of this obligation, must, in the literal sense of the word, impair it. . . . But it is not true, that the parties have in view only the property in possession when the contract is formed, or that its obligation does not extend to future acquisitions. Industry, talents and integrity constitute a fund which is as confidently trusted as property itself. Future acquisitions are, therefore, liable for contracts; and to release them from this liability impairs their obligation." And, in *Planters' Bank* v. *Sharp*, 6 How. 301, 327, opinion by Mr. Justice Woodbury: "One of the tests that a contract has been impaired is, that its value has by legislation been diminished. It is not, by the Constitution, to be impaired at all. This is not a question of degree or manner or cause, but of encroaching in any respect on its obligation, dispensing with any part of its force." *Ogden* v. *Saunders*, 12 Wheat. 213, 257;

McCracken v. *Hayward*, 2 How. 608, 612; *Edwards* v. *Kearzey*, 96 U. S. 595, 600.

So far as the statute of 1914 undertook to exempt the policies and their proceeds from antecedent debts it came into conflict with the Federal Constitution. See *Lessley* v. *Phipps*, 49 Mississippi, 790; *Johnson* v. *Fletcher*, 54 Mississippi, 628; *Rice* v. *Smith*, 72 Mississippi, 42; *In re Heilbron's Estate*, 14 Washington, 536; *Skinner* v. *Holt*, 9 S. Dak. 427; *The Homestead Cases*, 22 Grattan, 266.

The judgment of the court below must be reversed and the cause remanded for further proceedings not inconsistent with this opinion.

Reversed.

MR. JUSTICE CLARKE dissents.

MILLER & LUX, INCORPORATED, v. SACRAMENTO & SAN JOAQUIN DRAINAGE DISTRICT.

ERROR TO THE SUPREME COURT OF THE STATE OF CALIFORNIA.

No. 347. Argued March 9, 10, 1921.—Decided April 11, 1921.

That particular lands included in a drainage district will receive no direct benefits is clearly not *per se* enough to exempt them, under the Fourteenth Amendment, from assessment. P. 130. *Houck* v. *Little River Drainage District*, 239 U. S. 254.

Writ of error to review 182 California, 252, dismissed; petition for a writ of certiorari denied.

THE case is stated in the opinion.

Mr. Edward F. Treadwell for plaintiff in error.

Mr. Charles S. Peery, with whom *Mr. Jeremiah F. Sullivan* was on the brief, for defendant in error.

MR. JUSTICE MCREYNOLDS delivered the opinion of the court.

This cause is here upon writ of error to the Supreme Court of the State of California. 182 California, 252. There is also an application for certiorari, but under the settled practice no adequate grounds therefor are shown.

By the Act of May 26, 1913, effective August 10, 1913 (Stats. 1913, p. 252), the legislature of California undertook to create the Sacramento and San Joaquin Drainage District, including 1,725,553 acres along the general course of the Sacramento and San Joaquin rivers, and particularly an extensive area south of Stockton. The Reclamation Board, appointed as directed by the statute, levied a tax of $250,000 for general preliminary expenses incidental to the project and appointed assessors to apportion the same. Certain of plaintiff in error's lands lying south of Stockton were assessed at five cents per acre, and to annul this assessment it began the present proceeding. In support of the writ of error reliance is placed upon the contention that, as construed by the state courts, the Act of 1913 denies plaintiff in error opportunity to show that its lands will receive no special or direct benefits from the proposed works, and therefore conflicts with the Fourteenth Amendment. But we think that when the writ was sued out (May, 1920) this claim had already become too unsubstantial to support our jurisdiction as defined by the Act of September 6, 1916, c. 448, 39 Stat. 726. Since *Houck* v. *Little River Drainage District*, (1915) 239 U. S. 254, the doctrine has been definitely settled that in the absence of flagrant abuse or purely arbitrary action a State may establish drainage districts and tax lands therein for local improvements, and that none of such lands may escape liability solely because they will not receive direct benefits. The allegations of the original

complaint are wholly insufficient to raise the issue in respect of arbitrary legislative action presented by *Myles Salt Co.* v. *Iberia Drainage District*, 239 U. S. 478.

The petition for certiorari is denied and the writ of error is dismissed.

EX PARTE IN THE MATTER OF NATIONAL PARK BANK OF NEW YORK, PETITIONER.

PETITION FOR WRIT OF MANDAMUS.

No. 28, Original. Argued March 15, 1921.—Decided April 11, 1921.

1. The Circuit Court of Appeals is without power to reopen a case to correct an alleged oversight, after final judgment disposing of all the issues and after expiration of the term. P. 132.
2. Mandamus will not be granted to correct an error of a lower court for which remedies by petitions for rehearing and for certiorari were available. P. 133.

Rule discharged; petition dismissed.

THE case is stated in the opinion.

Mr. Edwin V. Guinan, with whom *Mr. Louis F. Doyle*, *Mr. I. H. Burney* and *Mr. R. W. Flournoy* were on the brief, for petitioner.

MR. JUSTICE BRANDEIS delivered the opinion of the court.

The National Park Bank of New York filed in this court a petition for a writ of mandamus directed to the United States Circuit Court of Appeals for the Fifth Circuit. A rule to show cause was granted; and the case is now here on the petition and the return.

In order to satisfy a judgment against the Reid Cattle Company the bank brought suit against it and the City of Fort Worth, in the federal court for the Northern District of Texas, to have certain lands to which the city held title declared property of the company and subject to the payment of its debts. The lands comprised about 30,000 acres and had been deeded to the city by Baldridge. He had received conveyances of all the lands except one 640-acre tract either directly or indirectly from the company; and it was alleged that all the lands including that tract had been conveyed to him either in trust for the company or in fraud of its creditors. The District Court, finding that all the lands had been held in trust for the company and that the city was not a purchaser for value without notice, decreed that all the lands be subjected to payment of the company's debts. Upon appeal by the city the Circuit Court of Appeals found that the lands had not been conveyed in trust for the company; but it affirmed the decree in part and reversed it in part. 261 Fed. Rep. 817. The decree was affirmed so far as it related to lands conveyed by the company by deed of August 25, 1914, on the ground that such conveyance was in fraud of creditors. The decree was reversed so far as it related to lands conveyed by deed of the company dated December 7, 1911, on the ground that this conveyance left the company solvent The opinion and the decree omitted to make specific reference to the 640-acre tract, the legal title to which had never been in the company but had stood in the name of Davidson and had been conveyed to Baldridge by deed of October 13, 1913.

The decision of the Court of Appeals was rendered December 2, 1919. A motion for a rehearing of the whole case was made and it contained, among other contentions, a slight reference to the failure to dispose of the Davidson tract. That motion was overruled January 13, 1920. No attempt was made to stay the mandate which issued

in due course and was filed in the District Court February 2, 1920. The term of the Circuit Court of Appeals did not end until September 1, 1920, but no further application of any kind was made during that term of court. In November, 1920, after the city filed in the District Court a motion for judgment on the mandate, the bank applied to the Circuit Court of Appeals for permission to file a motion in which it called attention to the failure to pass specifically upon the claim to the Davidson tract and contended that the decree entered at the preceding term was, for that reason, not final and should be modified. The Circuit Court of Appeals denied leave to file the motion and this petition for a writ of mandamus was then brought to require the Circuit Court of Appeals to enter a final judgment disposing of the Davidson tract.

It is clear that the rule granted must be discharged. The decree entered by the Circuit Court of Appeals was, in the light of its opinion, a final one, and disposed of all the issues before it. That court was powerless to modify the decree after the expiration of the term at which it was entered. If the omission in the decree had been adequately called to the court's attention during the term it would doubtless have corrected the error complained of; or relief might have been sought in this court by a petition for a writ of certiorari. The bank failed to avail itself of remedies open to it. A petition for writ of mandamus will not be granted under such circumstances. *Ex parte Riddle*, 255 U. S. 450.

Rule discharged.
Petition dismissed.

MISSOURI PACIFIC RAILWAY COMPANY v. McGREW COAL COMPANY.

ERROR TO THE SUPREME COURT OF THE STATE OF MISSOURI.

No. 265. Argued March 1, 1921.—Decided April 11, 1921.

1. The Missouri long-and-short-haul statute is constitutional. P. 135. *Missouri Pacific Ry. Co.* v. *McGrew Coal Co.*, 244 U. S. 191.
2. Whether under the statute a shipper may recover overcharges which he did not himself pay is a question of state law. P. 135.

280 Missouri, 466, affirmed.

THE case is stated in the opinion.

Mr. Edward J. White, with whom *Mr. James F. Green* and *Mr. Harvey C. Clark* were on the briefs, for plaintiff in error. They contended that the statute imposed an unreasonable burden on interstate commerce; that its enforcement deprived the company of property without due process of law and denied it the equal protection of the laws in violation of the Fourteenth Amendment; and that, as the statute only gave a right of action to the party aggrieved, a recovery could not be allowed to a shipper whose consignee paid the charges.

Mr. Edwin A. Krauthoff, with whom *Mr. Z. Lewis Dalby*, *Mr. William S. McClintock* and *Mr. Arthur L. Quant* were on the brief, for defendant in error.

Memorandum opinion by direction of the court, by MR. JUSTICE BRANDEIS.

In this action by a shipper brought under the long-and-short-haul statute of Missouri a judgment for the over-

charges entered by the trial court was affirmed by the highest court of the State.

The case comes here on writ of error, the railroad contending that the statute as construed violates rights secured to it by the Federal Constitution. The only federal question which was substantial and properly raised below was decided adversely to the railroad's contention in *Missouri Pacific Ry. Co.* v. *McGrew Coal Co.*, 244 U. S. 191, a case between the same parties and involving transactions precisely similar. The objection now made, that the shipper did not pay freight charges and, therefore, was not damaged, raised no substantial federal question but a qucstion of state law which we have no jurisdiction to review. See *Osborne* v. *Gray*, 241 U. S. 16, 20.

Affirmed.

BLOCK, TRADING UNDER THE NAME OF WHITES, *v.* HIRSH.

ERROR TO THE COURT OF APPEALS OF THE DISTRICT OF COLUMBIA.

No. 640. Argued March 3, 1921.—Decided April 18, 1921.

The Act of October 22, 1919, c. 80, Title II, 41 Stat. 297, created a commission with power, upon notice and hearing, to determine whether the rent, service and other terms and conditions of the use and occupancy of apartments, hotels and other rental property in the District of Columbia, were fair and reasonable and, if found otherwise, to fix fair and reasonable rents, etc., in lieu; it provided that a tenant's right of occupancy should, at his option, continue, notwithstanding the expiration of his term, subject to regulation by the commission, so long as he paid the rent and performed the conditions fixed by his lease or as modified by the commission; reserved, however, to the owner his right to possession for actual *bona fide* occupancy by himself, his wife, children or dependents, upon giving

a 30 days' notice to quit; made the commission's findings conclusive on matters of fact, but reviewable by the Court of Appeals of the District on matters of law; limited the regulation thus established to a period of two years; and declared that its provisions were made necessary by emergencies growing out of the War, resulting in rental conditions dangerous to the public health and burdensome to public officers, employees and accessories, and thereby embarrassing the Federal Government in the transaction of the public business.—In an action in which an owner, ignoring this legislation, and without serving the required notice, sought to oust a tenant, holding over in violation of a lease made before the act was passed, and in which the act was relied on by the tenant, particularly its requirement of notice, but was declared unconstitutional by the court below,—

Held: (1) That the legislative declaration of facts affording the ground for the regulation was entitled to great respect and was confirmed by common knowledge. P. 154.

(2) That the exigency existing in the District clothed the letting of buildings there with a public interest so great as to justify regulation by law, *i. e.*, by the police power of Congress,—while such exigency lasts. P. 155.

(3) That, assuming the owner in this case did not desire the premises for his own use (as it might have turned out if the entire law had not been declared void) and treating the property as held for rent, the effect of the act, in allowing the tenant to retain possession at the rent stipulated in the expired lease or as it might be modified by the commission, was not, under the circumstances, an unconstitutional restriction of the owner's dominion and right of contract or a taking of his property for a use not public. P. 156.

(4) That such regulation was justified as a temporary measure, even though it might not be as a permanent change. P. 157.

(5) That it did not become otherwise if the "reasonable rent" it secured meant depriving the owner, in part at least, of the power of profiting by the sudden influx of people to Washington, caused by the needs of the Government and the War. P. 157.

(6) That the preference given to the tenant in possession was justified as an incident of the policy of the legislation. P. 157.

(7) That, the end being legitimate and the means reasonably related to it, the wisdom of the means was not for the courts to pass upon. P. 158.

(8) That the court was not prepared to say in this case that the law, being valid in its principal aspects, was invalid in so far as it might operate to deprive landlords and tenants of trial by jury on the right to possession. P. 158.

50 App. D. C. 56, 73; 267 Fed. Rep. 614, 631, reversed.

ERROR to review a judgment of the court below holding unconstitutional the act regulating rents, etc., in the District of Columbia, in proceedings by a landlord to oust a tenant holding over. The facts are stated in the opinion, *post*, 153.

Mr. Jesse C. Adkins, with whom *Mr. Julius I. Peyser*, *Mr. George E. Edelin* and *Mr. Theodore D. Peyser* were on the brief, for plaintiff in error:

I. The requirement of thirty days' notice is constitutional. It but restores the law as it existed in the District prior to 1864 and is a mere change in the remedy. *Antoni* v. *Greenhow*, 107 U. S. 769.

Defendant in error cannot question the constitutionality of the regulatory provisions of the act. He is not within the class affected by them because he failed to give the required notice. *Turpin* v. *Lemon*, 187 U. S. 51; *Collins* v. *Texas*, 223 U. S. 288. Giving such a notice would not estop him to attack the statute. He invoked relief under the District Code, not the Rents Act. If the tenant questioned his good faith, the tenant would proceed before the Rent Commission. Mere defense to that complaint would not estop an attack on the constitutionality of the statute.

II. The regulatory provisions of the Rents Act are constitutional under the war power. That power includes the remedying of evils which have arisen from war. *Stewart* v. *Kahn*, 11 Wall. 493, 507. War existed when the act was approved. *Ruppert* v. *Caffey*, 251 U. S. 264. The shortage of houses in the District ensued from the rise and progress of the war. Section 122 of the act so declares, and this declaration is supported by the facts.

The Draft Law, appropriating the liberty and lives of citizens, was sustained in *Selective Draft Law Cases*, 245 U. S. 366. This man-power was made effective by a mass of legislation, some taking private property and some

regulating its use. The railroads were taken. The Lever Act of August 10, 1917, provided for the control of necessities of life. Under it fuel and articles of food were regulated in the minutest degree. Prices were fixed under this statute as well as under other legislation.

III. During the emergency caused by the war Congress in the exercise of its plenary police power in the District of Columbia may regulate rents of real property devoted to rental purposes.

The court below held that the owner of a reversion in real property which was under rental for a fixed term had the absolute right to oust the tenant instantly at the expiration of the term and to immediately regain possession, and that no economic or other condition could justify modification of these rights. But an owner never had an absolute right to use his property as he pleased. His rights over real property are not absolute. Unimproved real estate is regulated. The owner may be compelled to abate a nuisance: to erect fences, *Atlantic Coast Line R. R. Co.* v. *Goldsboro*, 232 U. S. 548, 561; to abstain from building without a permit. Every regulation deemed essential for health and safety has been sustained. Sometimes the use of the land is impeded, sometimes part of the land is taken, sometimes the value of the property is greatly lessened.

Control over personal property is not absolute. Interest and the price of bread have always been regulated. Personal property devoted to unlawful uses may be confiscated. *Goldsmith-Grant Co.* v. *United States*, 254 U. S. 505.

An owner's right to transfer property is limited. The wife has always been protected. Certain formalities always attended the transfer of property. Familiar instances are statutes requiring conditional sales to be in writing and recorded; bulk sales acts, *Lemieux* v. *Young*, 211 U. S. 489; blue-sky laws, *Hall* v. *Geiger-Jones Co.*, 242 U. S. 539. In Nebraska a mortgagor of personal property cannot sell without the written consent of the mort-

gagee. *State* v. *Heldenbrand*, 62 Nebraska, 136. The consent of the selling agent of a pool must be obtained before tobacco may be bought from the grower who pooled it. *Commonwealth* v. *Hodges*, 137 Kentucky, 233. Grain sales must be made on the basis of actual weight. *House* v. *Mayes*, 227 Missouri, 641. Lard must be in containers of specified weight. *Armour & Co.* v. *North Dakota*, 240 U. S. 510.

If during the emergency the business of renting real property in the District of Columbia holds such a peculiar relation to the public interest as to justify it, there will be superinduced upon that business the right of public regulation. This is the underlying principle. *German Alliance Insurance Co.* v. *Lewis*, 233 U. S. 389; *Munn* v. *Illinois*, 94 U. S. 113; *Budd* v. *New York*, 143 U. S. 517; *Brass* v. *Stoeser*, 153 U. S. 391, 410.

State legislatures have applied it to economic conditions affecting their own people and industries. *Nash* v. *Page*, 80 Kentucky, 547; *Commonwealth* v. *Hodges*, 137 Kentucky, 244; *Douglas Park Jockey Club* v. *Talbott*, 173 Kentucky, 685; *Davis* v. *State*, 68 Alabama, 63; *State* v. *Mullins*, 87 S. Car. 510. Indiana regulates the taking of natural gas. *Ohio Oil Co.* v. *Indiana*, 177 U. S. 190. Wyoming forbids the consumption of natural gas without the heat therein contained being utilized. *Walls* v. *Midland Carbon Co.*, 254 U. S. 300. New York has endeavored to protect its mineral springs. *Lindsley* v. *Natural Carbonic Gas Co.*, 220 U. S. 61. Idaho forbids the grazing of sheep on public lands within two miles of another's lands. *Bacon* v. *Walker*, 204 U. S. 311. In Florida and Washington a special license tax is imposed on merchants using trading stamps. *Rast* v. *Van Deman & Lewis Co.*, 240 U. S. 342; *Tanner* v. *Little*, 240 U. S. 369. In many States the common-law rules of liability are abolished and the rights and duties of employer and employee are regulated. In Maine municipalities are authorized to estab-

lish yards for the sale of fuel at cost. *Jones* v. *Portland*, 245 U. S. 217. North Dakota has authorized the lending of money to citizens for the construction of homes. *Green* v. *Frazier*, 253 U. S. 233. In other States an ulterior public advantage has justified a comparatively insignificant taking of private property for what in its immediate purpose is private use. *Clark* v. *Nash*, 198 U. S. 361; *Strickley* v. *Highland Boy Gold Mining Co.*, 200 U. S. 527; *Offield* v. *N. Y., N. H. & H. R. R. Co.*, 203 U. S. 372; *Noble State Bank* v. *Haskell*, 219 U. S. 104; *Perley* v. *North Carolina*, 249 U. S. 510. Indiana has created a coal commission with power to regulate prices. *American Coal Mining Co.* v. *Special Coal & Food Commission*, 268 Fed. Rep. 563. In Oklahoma laundry prices are regulated. *Oklahoma Operating Co.* v. *Love*, 252 U. S. 331.

The business of renting property in the District has risen to such public importance that it may be regulated.

The legislative declaration in Section 122 of the act is controlling if a state of facts could exist which would justify it. *Munn* v. *Illinois*, *supra*.

A state of facts does exist justifying the legislation. The virtual monopoly of rental property causes great economic disparity between house-owners and their tenants; there is serious danger of oppression and extortion; the remedy of competition cannot be made effective for years; lack of regulation will result in serious injury to the health, safety, morals, order and welfare of the community.

The legislative determination is supported by a mass of public opinion. The shortage of housing is world-wide. New South Wales created a fair rents court. England, France, Spain, Germany, Wisconsin, New York, Maine, Massachusetts and New Jersey have sought relief through statutes.

Mr. Wm. G. Johnson, with whom *Mr. Myer Cohen* and *Mr. Richard D. Daniels* were on the brief, for defendant in error:

The legislation is plainly unconstitutional and void, because its effect is to deprive the defendant in error of his property without due process of law, to take his property for private use and bestow it upon another, without compensation, and, in an action at law, in which the value in controversy exceeds twenty dollars, to deny to him, and to deprive him of, the right of trial by jury.

It is indisputable that, at the time of making the lease to Block and of his entry into possession thereunder, the owners had a vested estate, a reversion in fee, to come into possession, absolutely, on January 1, 1920; Block was a tenant in possession whose right of possession absolutely terminated on December 31, 1919, and by his covenant in the lease he had specifically agreed to surrender possession on that date. Also, that there existed legal remedies for enforcing this right of possession, should the tenant violate the agreement in his lease, and fail to surrender possession at the expiration of the term demised.

The owners also had an unrestricted right of alienation of the property, in the open market, to any purchaser whomsoever, and such alienation would confer upon their alienee all their rights of possession, subject to no lien, claim or charge of any kind, in behalf of the tenant, beyond the rights conferred by the lease itself.

They and their grantee would also have the right, either during or at the end of the term, to let the property anew, by successive lease, to begin at the expiration of the term demised, to another tenant, at the same or a higher or lower rent, or upon any other consideration, and the lessors and their grantee might, if they so preferred, occupy the property themselves or allow it to remain vacant; all without let or hindrance from the tenant.

The lease to Block, as appears on its face, preserved to the lessors and their grantee all of these rights to their utmost extent.

But he now claims that these rights of the lessors, and of their grantee, under the lease by which he obtained that possession, have all been swept away; not by any contract or agreement of the parties, but by subsequent legislation of Congress. And further, that by that legislation there has been conferred upon him the right and power, at his option, to retain possession of said property, in violation of his covenant in the lease, and after the expiration of the term demised.

The requirement for notice to the tenant embodied in the act is neither an applicable nor valid provision of law. The act was not operative when Hirsh's right of possession and right of action accrued. Any notice under the act would have extended Block's right of possession beyond the term of the lease. The notice required was a direct limitation upon Hirsh's right of possession under the lease, and required Hirsh to surrender in advance his constitutional right to a trial by jury.

Giving the notice would have precluded Hirsh from questioning the constitutionality of the statute. The statute undertook to take from Hirsh his right of possession of his property and transfer it to Block to hold at Block's option. The same statute gave Hirsh a means of escape from this spoliation for Block's benefit in two cases; if he wished the property for his own occupancy, or wished to tear down the building and immediately rebuild for rental purposes. But the escape from this spoliation was conditioned, in the same section of the same act. The conditions were, first, that he give Block a thirty days' notice, containing a full and correct statement of the facts and circumstances upon which it was based; second, that Block might dispute that notice as to its accuracy, sufficiency, good faith and service; and, third, that the commission should finally determine that dispute, without a jury trial and its decision on the facts should be final, and binding upon every court.

Hirsh had another mode of escaping this spoliation, in Block's behalf, and that was by appealing to the courts for protection under the Constitution.

He had perfect freedom to pursue either course but could not pursue both. If he elected to avail himself of the mode of escape given by the statute and gave the notice, he was then bound by his choice and could not question the constitutionality of the statute. Such is the settled law of this court. *Daniels* v. *Tearney*, 102 U. S. 415, 421; *Electric Co.* v. *Dow*, 166 U. S. 489, 490; *Wight* v. *Davidson*, 181 U. S. 371, 377; *Grand Rapids & Indiana Ry. Co.* v. *Osborn*, 193 U. S. 17, 29; *Shepard* v. *Barron*, 194 U. S. 553, 567.

The legislation of Congress relied upon by plaintiff in error is unconstitutional and void. Language and purpose are alike plain. It enacts that notwithstanding the fact that Block's lease expires, absolutely, on the 31st of December, 1919, and that the unconditional right to immediate possession, on that day, accrued to the lessors and to their assignee, nevertheless, Block, if he so please, may retain possession for two years longer and the rightful owner shall not maintain any proceeding to recover possession.

Another provision,—that "every purchaser shall take conveyance of any rental property, hotel, or apartment subject to the rights of tenants as provided in this title,"—subjects the fee simple owner's title to a lien in favor of the tenant and cuts down the owner's power of alienation by requiring that all purchasers shall take subject to that lien. This restraint upon the power of alienation is heightened by the fact that the lien is for no definite time, but at the caprice of the tenant.

Without any new contract between the parties, without the owner's consent, without any act done by either, without any consideration or compensation to the fee simple owner, and without a hearing or notice of any

kind, but solely by legislative declaration, this reversion of the owner is taken from him and given to the tenant and the owner's power of sale is made subject to this lien for an extension of lease at the will of the tenant.

By another provision the tenant may, however, with the consent of the commission, assign or sublet this reversion of the owner, at a profit to the tenant.

Nor is this all. By the terms of the "Saulsbury Resolution" (40 Stat. 593) the rent to be paid for this statutory appropriation of the owner's reversion to the use of the tenant is fixed by the legislature at the rate of rent fixed by the lease, no matter how much the rental value may have increased.

A yet further invasion of the owner's rights is provided by § 106 of the act. Under that provision, a tenant may call upon the commission to reduce the rent, and the commission may make that reduction and under § 107 require the owner to refund rent paid under the lease.

It is earnestly insisted that these invasions of private property rights are all unconstitutional and void, because they take private property for private use, they take private property without compensation and they deprive the owner of his property without due process of law. *Missouri Pacific Ry. Co.* v. *Nebraska*, 164 U. S. 403, 412, 413, 417; *Calder* v. *Bull*, 3 Dall. 386, 388, 389; *Wilkinson* v. *Leland*, 2 Pet. 627, 657, 658; *Monongahela Navigation Co.* v. *United States*, 148 U. S. 312, 324, 325; *Ochoa* v. *Hernandez*, 230 U. S. 139, 161; *Sinking-Fund Cases*, 99 U. S. 700, 718, 719.

There is no power in the United States, through Congress or otherwise, to take private property for private use. The right to take it at all, is not expressly conferred by the Constitution, but, as held in *Kohl* v. *United States*, 91 U. S. 367, 374, 375, the right of eminent domain, to which all lawful taking is referred, is a necessary attribute of sovereignty, but limited to it for sovereign purposes.

Not only does this legislation attempt to take from the landlord owner his reversion and bestow it upon the tenant, to hold at the tenant's will, but it also denies all right of judicial redress. It does not change or substitute remedies, but denies them *in toto*. By the express terms of the act, the tenant's "right" to "use or occupancy" shall "continue" "and such tenant shall not be evicted or dispossessed so long as he pays the rent."

But the previously existing right of action in the landlord to recover his property against wrongful detention is also "property" of which he may not be deprived without due process of law. *Pritchard* v. *Norton*, 106 U. S. 124, 132; *Munn* v. *Illinois*, 94 U. S. 113, 134.

It is also the constitutional right of the citizen to decide for himself with whom he will contract and whom he will accept or continue as tenant, and he may not lawfully be compelled to accept one as tenant of whom he does not approve. *Adair* v. *United States*, 208 U. S. 161, 173; *Coppage* v. *Kansas*, 236 U. S. 1.

The existence of a state of war gives no validity to the statute. War carries many and grievous afflictions, but among them is not the abrogation, temporary or permanent, of the constitutional limitations upon the power of Congress. Not one of the powers conferred, or restrictions imposed, upon Congress, by the Constitution, is accompanied with or qualified by any exception in the case of the existence of a state of war, unless it be the Third Amendment, which provides that—"No soldier shall, in time of peace be quartered in any house, without the consent of the owner, nor in time of war but in a manner to be prescribed by law." In this Amendment there is a plainly implied power in Congress to legislate as to the manner of quartering soldiers in a private house in time of war, but with this exception there is no restriction upon the power of Congress not equally applicable in both peace and war.

And it is not going too far to say that there is also a plain implication in this Amendment that no civilian shall be quartered in any house in time of either peace or war, without the consent of the owner. *Hamilton* v. *Kentucky Distilleries Co.*, 251 U. S. 146, 156; *Mitchell* v. *Harmony*, 13 How. 115, 134, 135.

There is nothing in the record to suggest that Block's retention of possession against the right of the owner could in any way aid or influence the prosecution of the war.

The legislative declaration that this property is affected with a public interest is, itself, invalid.

The facts, undisputed on the record, show that neither Hirsh nor his grantors did any act admitting or inviting the public to the possession or use of this property—on the contrary they did all that it was legally possible for them to do to exclude the public. The record also shows that the public has acquiesced in that exclusion, for it left Block in undisturbed possession throughout the term demised.

In *Munn* v. *Illinois*, *supra*, this court did not base its decision that the grain elevators were clothed with a public interest on any statutory declaration to that effect, but upon the facts admitted by the plaintiff in error. It then became necessary to determine whether, in the exercise of the police power to regulate the use of such property, the legislature had exceeded its powers. It was with reference to the facts calling for the exercise of the particular kind of regulation which the statute provided that the court uses the language quoted in the dissenting opinion of the court below, and not upon the question of fact whether the property was or was not affected with a public interest. *Producers Transportation Co.* v. *Railroad Commission*, 251 U. S. 228, 230.

Even if the mere legislative declaration that private property "is affected with a public interest" could be

evidence of that fact, it could not be conclusive; otherwise the use of those six words in a statute could destroy all private ownership in the whole country. The record in this case conclusively shows that Hirsh's property was not affected with a public interest; that it has not been subjected to a public use but that it has been, ever since the execution of the lease, private property in the strictest sense. *Weems Steamboat Co.* v. *People's Steamboat Co.*, 214 U. S. 345, 356; *Terminal Taxicab Co.* v. *District of Columbia*, 241 U. S. 252, 256.

It was contended in the court below that the universally admitted right of the legislature to regulate the rate of interest on loans of money was a recognition of the power to regulate purely private contracts between individuals. It may be said in this connection that interest statutes do not assume to compel the lending of money to particular persons nor the continuation of loans after they are due, on the condition that the interest be paid, as this legislation attempts to continue leases after their expiration.

But interest is a creature of statute and may be regulated or abolished by that power which gave it legal existence. Lord Bacon, Essay on Usury; *Lloyd* v. *Scott*, 4 Pet. 205, 224. There is, therefore, no analogy between the case of a statute fixing rates of interest and one transferring the landlord's reversion to his tenant, without the consent of the landlord.

Mr. Henry H. Glassie, Special Assistant to the Attorney General, with whom *The Solicitor General* was on the brief, for the United States as *amicus curiæ*, by special leave of court:

I. A declaration by Congress that emergencies growing out of the war caused apartments, hotels, and other rental property at the seat of government to be affected with a public interest is conclusive, unless the inference be

such as no rational mind could draw. *Price* v. *Illinois*, 238 U. S. 446, 451; *Rast* v. *Van Deman & Lewis Co.*, 240 U. S. 342, 365.

II. The conclusion that, under the facts found, the relation between the owners and the users of such property could not be safely left to the unregulated action of individual economic interest, so far from being irrational, was a sound legislative judgment reached after an elaborate investigation into prices, rents and related subjects. Sen. Rep. 150, 66th Cong., 1st sess.; Sen. Rep. 327, 66th Cong., 2d sess.; House Rep. 349, 66th Cong., 2d sess.; House Rep. 269, 62d Cong., 2d sess. It is shared by other responsible legislatures forced to deal with similar conditions in areas of congested population. N. Y. Laws 1920, c. 136–145; c. 942–953; Wisconsin Laws Special Session 1920, c. 16; New Jersey Laws 1920, c. 193, c. 357; Massachusetts Acts of 1920, c. 555.

III. The whole argument against the statute proceeds upon an extreme individualistic conception of real property which, in effect, denies the existence of any police power in respect thereof. It is said that when a tenant's estate ceases by expiration of the term, the landlord's right to repossess the property is in its nature absolute, that he has an immediate right to let the property anew to another tenant at a higher rent, or not to lease it, and that his vendee has the same unqualified right. This is but a statement of the existing incidents of a reversion after a term of years in the absence of regulation. To say that an owner of a building not used by himself has, under whatsoever economic and social stress, an indestructible right to grant such use only upon such terms, for such price, during such time, and to such person as he may choose, immune from the possibility of any regulating control whatever, is but to assert, contrary to fundamental conceptions of the common law, that private ownership in land is absolute. This conception would

exclude the very things to which the term "affected with a public interest" was first applied, and cannot be reconciled with the long list of acts collected in *Head* v. *Amoskeag Manufacturing Co.*, 113 U. S. 9, 17–18. It is immaterial whether such statutes are deemed to rest on the right of eminent domain (113 U. S. 19), or upon the power to regulate use even to the extent of coercing it upon fair compensation where the public interest so requires. 113 U. S. 24–26; *Murdock* v. *Stickney*, 8 Cush. 113, 116. They all embody the principle of the subordination of ownership to utilization, where use by others is essential to the maintenance of general living conditions or increases the productive power or economic welfare of any considerable part of the population. Thus it has come to be established that real property may, under special circumstances of grave general concern, become so far affected with a public interest that uses which, in their immediate purpose, are private must be regarded as public. *Clark* v. *Nash*, 198 U. S. 361; *Strickley* v. *Highland Boy Gold Mining Co.*, 200 U. S. 527. These are cases of expropriation. But a like power to regulate must equally exist where the use of certain classes of property is so bound up with the characteristic life of the community and the operations of government that both will suffer utter disorganization unless fair and stable conditions are maintained in respect of the terms of such use.

IV. The public interest may be protected by regulating, on the basis of a reasonable charge, the compensation or rental to be paid for use of property by persons let into possession by the owners. *Munn* v. *Illinois*, 94 U. S. 113; *Budd* v. *New York*, 143 U. S. 517; *Noble State Bank* v. *Haskell*, 219 U. S. 104; *German Alliance Insurance Co.* v. *Lewis*, 233 U. S. 389.

The owner has devoted his property to a public use in that he has engaged in a business relation which the legislature has reasonably held to need regulation. It may

therefore be regulated after it has been entered into. *Louisville & Nashville R. R. Co.* v. *Mottley*, 219 U. S. 467, 482, 485. Nor is "public use" limited to a community use enjoyed by the public generally or one which the public has a right to demand. *German Alliance Insurance Co.* v. *Lewis, supra.*

The business of renting out apartments and houses under the existing circumstances discloses the same fundamental elements found in other cases where a public interest has been held to warrant the regulation of a business not enjoying any statutory privilege. There is in such cases a state of virtual monopoly, or, conversely stated, an absence of effective competition. The consuming public stands in a position of economic helplessness. This may result from conditions on the side of supply or on the side of demand, from limitations natural in the physical sense, *Spring Valley Water Works* v. *Schottler*, 110 U. S. 347; *Van Dyke* v. *Geary*, 244 U. S. 39, 47; or, natural only in the sense that, under the circumstances of a given community, facilities available for the particular purpose are not susceptible of multiplication or enlargement. *Munn* v. *Illinois*, 94 U. S. 113; *Budd* v. *New York*, 143 U. S. 517, 531, 535; *Brass* v. *Stoeser*, 153 U. S. 391, 402.

The public interest arising from the existence of an instant need naturally receives a vast extension in all periods of abnormal economic stress. *Wilson* v. *New*, 243 U. S. 332, 348. But to concede that rent regulation might exist as a war power is to concede that it exists under certain conditions of social fact, whether arising from that emergency or some other.

The recognition of such conditions of economic dependence lies at the root of practically all the social legislation of our time. *Knoxville Iron Co.* v. *Harbison*, 183 U. S. 13, 20; *Muller* v. *Oregon*, 208 U. S. 412, 422; *Erie R. R. Co.* v. *New York*, 233 U. S. 671, 704; *German Alliance Insurance Co.* v. *Lewis*, 233 U. S. 389, 417.

V. The housing situation in a city like New York or Washington presents all the features of a practical monopoly; the normal competitive system has completely broken down.

VI. The conditions are intensified by the special relations in which the District of Columbia stands to the Federal Government.

VII. Temporary continuance of occupancy is an appropriate means of making rent regulation effective.

(a) With respect to leases subsequent to the act, such authority seems clear since the contract clause has no application. *Munday* v. *Wisconsin Trust Co.*, 252 U. S. 499, 503; and Congress, having power to mould the landlord and tenant relation, may make it a statutory term in every tenancy that a tenant may continue to occupy the property for a limited time, upon payment of the stipulated rent or a fair rent fixed by authority. Pollock & M., Hist. Eng. L., vol. I, p. 338; vol. II, 106, 109; Holdsworth, Hist. Eng. L., vol. III, pp. 107, 180; *Mountain Timber Co.* v. *Washington*, 243 U. S. 219, 238; *New York Central R. R. Co.* v. *White*, 243 U. S. 188, 196, 200. Cf. The Maryland Acts for the redemption of ground rents. Md. Code, art. 53, §§ 24–25; Md. Acts 1884, c. 485; 1888, c. 395; 1900, c. 207; *Stewart* v. *Gorter*, 70 Maryland, 242; *Swan* v. *Kemp*, 97 Maryland, 686. The only limitation is that the essential property itself shall not be taken away, and that is not done when the owner throughout the emergency period gets the fair and reasonable value of the use.

(b) In respect of leases made before but expiring after the act, the power to extend the occupancy is a reasonable corollary of the power to regulate the rental. *United States* v. *Ferger*, 250 U. S. 199, 203, 205; *Jacobson* v. *Massachusetts*, 197 U. S. 11; *Miller* v. *Wilson*, 236 U. S. 373, 380.

(c) The owner's right to use the property is secured by the statute. The occupancy provision, therefore,

operates only to limit his future liberty to contract; that is, his liberty "to choose his own tenant." The impairment of any express covenant to surrender is merely incidental. What the statute regulates is the present rent for occupation subsequent to the act. If the landlord does not wish that there should be any subsequent occupation he has his old remedies. But if he wishes not to use but to rent, then the whole matter resolves itself into a question of the fair incidents of the regulation of the rent. *Manigault* v. *Springs*, 199 U. S. 473, 480; *Mutual Loan Co.* v. *Martell*, 222 U. S. 225, 231; *Knoxville Iron Co.* v. *Harbison*, 183 U. S. 13; *Keokee Coke Co.* v. *Taylor*, 234 U. S. 224; *Rast* v. *Van Deman & Lewis Co.*, 240 U. S. 342; *Thornton* v. *Duffy*, 254 U. S. 361.

(d) The landlord's ordinary power to contract is not interfered with in favor of persons not already in privity with him, but in respect of a class recognized as having a natural equity beyond the technical termination of the term. This interest has been often recognized by courts as well as legislatures, especially when supported by local usage or when special economic circumstances give it peculiar significance. *Boyle* v. *Lysaght*, 1 Vernon & Scriven (Ir.) Rep. 135, 142, 144; *Banks* v. *Haskie*, 45 Maryland, 207, 220. Cf. *Murray* v. *Bateman*, Ridgway's Cas. Parl. 187, 19 & 20 Geo. III, c. 30. Landlord and Tenant (Ireland) Act 1870 (33 & 34 Vict. c. 46); Land Law (Ireland) Act 1881 (44 & 45 Vict. c. 49); Small Landholders (Scotland) Act 1911 (1 & 2 Geo. V., c. 49). See also 5 & 6 Geo. V. c. 97; 9 Geo. V, c. 7; 9 & 10 Geo. V. c. 90; 10 & 11 Geo. V. c. 17; *Nevile* v. *Hardy*, 37 Times Law Rep. 129.

(e) The landlord is not prevented from going out of the renting business or required to continue it upon the terms fixed by the act. He may stop renting. But, in an emergency such as that declared by Congress, the right to regulate rents effectively can not be thwarted

upon a ground so abstract and socially injurious as a theoretical right to evict tenants for the purpose of destroying the building or keeping it vacant.

VIII. The statute makes due provision for the recovery of possession upon evidence of withdrawal from the rental class. Clearly the legislature may require a notice of the fact of withdrawal, may prescribe a reasonable time for the purpose, and may further require the notice to be submitted in the first place for the determination of the commission, because, if valid, it marks the end of their authority. That the commission has no jury is of no consequence. There is no jury in the court in which the issue of possession is first tried. That the parties have one on appeal is sufficient. *Capital Traction Co.* v. *Hof*, 174 U. S. 145.

MR. JUSTICE HOLMES delivered the opinion of the court.

This is a proceeding brought by the defendant in error, Hirsh, to recover possession of the cellar and first floor of a building on F Street in Washington which the plaintiff in error, Block, holds over after the expiration of a lease to him. Hirsh bought the building while the lease was running, and on December 15, 1919, notified Block that he should require possession on December 31, when the lease expired. Block declined to surrender the premises, relying upon the Act of October 22, 1919, c. 80, Title II—"District of Columbia Rents"; especially § 109, 41 Stat. 297, 298, 301. That is also the ground of his defence in this Court, and the question is whether the statute is constitutional, or, as held by the Court of Appeals, an attempt to authorize the taking of property not for public use and without due process of law, and for this and other reasons void.

By § 109 of the act the right of a tenant to occupy any hotel, apartment, or "rental property," i. e., any building

or part thereof, other than hotel or apartment, (§ 101), is to continue notwithstanding the expiration of his term, at the option of the tenant, subject to regulation by the Commission appointed by the act, so long as he pays the rent and performs the conditions as fixed by the lease or as modified by the Commission. It is provided in the same section that the owner shall have the right to possession "for actual and bona fide occupancy by himself, or his wife, children, or dependents . . . upon giving thirty days' notice in writing." According to his affidavit Hirsh wanted the premises for his own use, but he did not see fit to give the thirty days' notice because he denied the validity of the act. The statute embodies a scheme or code which it is needless to set forth, but it should be stated that it ends with the declaration in § 122 that the provisions of Title II are made necessary by emergencies growing out of the war, resulting in rental conditions in the District dangerous to the public health and burdensome to public officers, employees and accessories, and thereby embarrassing the Federal Government in the transaction of the public business. As emergency legislation the Title is to end in two years unless sooner repealed.

No doubt it is true that a legislative declaration of facts that are material only as the ground for enacting a rule of law, for instance, that a certain use is a public one, may not be held conclusive by the Courts. *Shoemaker* v. *United States*, 147 U. S. 282, 298. *Hairston* v. *Danville & Western Ry. Co.*, 208 U. S. 598, 606. *Prentis* v. *Atlantic Coast Line Co.*, 211 U. S. 210, 227. *Producers Transportation Co.* v. *Railroad Commission*, 251 U. S. 228, 230. But a declaration by a legislature concerning public conditions that by necessity and duty it must know, is entitled at least to great respect. In this instance Congress stated a publicly notorious and almost world-wide fact. That the emergency declared by the statute did exist

must be assumed, and the question is whether Congress was incompetent to meet it in the way in which it has been met by most of the civilized countries of the world.

The general proposition to be maintained is that circumstances have clothed the letting of buildings in the District of Columbia with a public interest so great as to justify regulation by law. Plainly circumstances may so change in time or so differ in space as to clothe with such an interest what at other times or in other places would be a matter of purely private concern. It is enough to refer to the decisions as to insurance, in *German Alliance Insurance Co.* v. *Lewis*, 233 U. S. 389; irrigation, in *Clark* v. *Nash*, 198 U. S. 361; and mining, in *Strickley* v. *Highland Boy Gold Mining Co.*, 200 U. S. 527. They sufficiently illustrate what hardly would be denied. They illustrate also that the use by the public generally of each specific thing affected cannot be made the test of public interest, *Mt. Vernon-Woodberry Cotton Duck Co.* v. *Alabama Interstate Power Co.*, 240 U. S. 30, 32, and that the public interest may extend to the use of land. They dispel the notion that what in its immediate aspect may be only a private transaction may not be raised by its class or character to a public affair. See also *Noble State Bank* v. *Haskell*, 219 U. S. 104, 110, 111.

The fact that tangible property is also visible tends to give a rigidity to our conception of our rights in it that we do not attach to others less concretely clothed. But the notion that the former are exempt from the legislative modification required from time to time in civilized life is contradicted not only by the doctrine of eminent domain, under which what is taken is paid for, but by that of the police power in its proper sense, under which property rights may be cut down, and to that extent taken, without pay. Under the police power the right to erect buildings in a certain quarter of a city may be limited to from eighty to one hundred feet. *Welch* v.

Swasey, 214 U. S. 91. Safe pillars may be required in coal mines. *Plymouth Coal Co.* v. *Pennsylvania*, 232 U. S. 531. Billboards in cities may be regulated. *St. Louis Poster Advertising Co.* v. *St. Louis*, 249 U. S. 269. Watersheds in the country may be kept clear. *Perley* v. *North Carolina*, 249 U. S. 510. These cases are enough to establish that a public exigency will justify the legislature in restricting property rights in land to a certain extent without compensation. But if to answer one need the legislature may limit height to answer another it may limit rent. We do not perceive any reason for denying the justification held good in the foregoing cases to a law limiting the property rights now in question if the public exigency requires that. The reasons are of a different nature but they certainly are not less pressing. Congress has stated the unquestionable embarrassment of Government and danger to the public health in the existing condition of things. The space in Washington is necessarily monopolized in comparatively few hands, and letting portions of it is as much a business as any other. Housing is a necessary of life. All the elements of a public interest justifying some degree of public control are present. The only matter that seems to us open to debate is whether the statute goes too far. For just as there comes a point at which the police power ceases and leaves only that of eminent domain, it may be conceded that regulations of the present sort pressed to a certain height might amount to a taking without due process of law. *Martin* v. *District of Columbia*, 205 U. S. 135, 139.

Perhaps it would be too strict to deal with this case as concerning only the requirement of thirty days' notice. For although the plaintiff alleged that he wanted the premises for his own use the defendant denied it and might have prevailed upon that issue under the act. The general question to which we have adverted must be decided, if not in this then in the next case, and it should

be disposed of now.—The main point against the law is that tenants are allowed to remain in possession at the same rent that they have been paying, unless modified by the Commission established by the act, and that thus the use of the land and the right of the owner to do what he will with his own and to make what contracts he pleases are cut down. But if the public interest be established the regulation of rates is one of the first forms in which it is asserted, and the validity of such regulation has been settled since *Munn* v. *Illinois*, 94 U. S. 113. It is said that a grain elevator may go out of business whereas here the use is fastened upon the land. The power to go out of business, when it exists, is an illusory answer to gas companies and waterworks, but we need not stop at that. The regulation is put and justified only as a temporary measure. See *Wilson* v. *New*, 243 U. S. 332, 345, 346. *Fort Smith & Western R. R. Co.* v. *Mills*, 253 U. S. 206. A limit in time, to tide over a passing trouble, well may justify a law that could not be upheld as a permanent change.

Machinery is provided to secure to the landlord a reasonable rent. § 106. It may be assumed that the interpretation of "reasonable" will deprive him in part at least of the power of profiting by the sudden influx of people to Washington caused by the needs of Government and the war, and thus of a right usually incident to fortunately situated property—of a part of the value of his property as defined in *International Harvester Co.* v. *Kentucky*, 234 U. S. 222. *Southern Ry. Co.* v. *Greene*, 216 U. S. 400, 414. But while it is unjust to pursue such profits from a national misfortune with sweeping denunciations, the policy of restricting them has been embodied in taxation and is accepted. It goes little if at all farther than the restriction put upon the rights of the owner of money by the more debatable usury laws. The preference given to the tenant in possession is an almost necessary incident of the policy and is traditional in English law. If the tenant

remained subject to the landlord's power to evict, the attempt to limit the landlord's demands would fail.

Assuming that the end in view otherwise justified the means adopted by Congress, we have no concern of course with the question whether those means were the wisest, whether they may not cost more than they come to, or will effect the result desired. It is enough that we are not warranted in saying that legislation that has been resorted to for the same purpose all over the world, is futile or has no reasonable relation to the relief sought. *Chicago, Burlington & Quincy R. R. Co.* v. *McGuire*, 219 U. S. 549, 569.

The statute is objected to on the further ground that landlords and tenants are deprived by it of a trial by jury on the right to possession of the land. If the power of the Commission established by the statute to regulate the relation is established, as we think it is, by what we have said, this objection amounts to little. To regulate the relation and to decide the facts affecting it are hardly separable. While the act is in force there is little to decide except whether the rent allowed is reasonable, and upon that question the courts are given the last word. A part of the exigency is to secure a speedy and summary administration of the law and we are not prepared to say that the suspension of ordinary remedies was not a reasonable provision of a statute reasonable in its aim and intent. The plaintiff obtained a judgment on the ground that the statute was void, root and branch. That judgment must be reversed.

Judgment reversed.

MR. JUSTICE McKENNA, with whom concurred THE CHIEF JUSTICE, MR. JUSTICE VAN DEVANTER and MR. JUSTICE McREYNOLDS, dissenting:

THE CHIEF JUSTICE, MR. JUSTICE VAN DEVANTER, MR. JUSTICE McREYNOLDS and I dissent from the opinion

and judgment of the court. The grounds of dissent are the explicit provisions of the Constitution of the United States; the specifications of the grounds are the irresistible deductions from those provisions and, we think, would require no expression but for the opposition of those whose judgments challenge attention.

The National Government by the Fifth Amendment to the Constitution, and the States by the Fourteenth Amendment, are forbidden to deprive any person of "life, liberty, or property, without due process of law." A further provision of the Fifth Amendment is that private property cannot be taken for public use, without just compensation. And there is a special security to contracts in § 10 of Article I in the provision that "No State shall . . . pass any . . . law impairing the obligation of contracts. . . ." These provisions are limitations upon the national legislation, with which this case is concerned, and limitations upon state legislation, with which *Marcus Brown Holding Co.* v. *Feldman*, *post*, 170, is concerned. We shall more or less consider the cases together, as they were argued and submitted on the same day and practically depend upon the same principles; and what we say about one applies to the other.

The statute in the present case is denominated "The Rent Law" and its purpose is to permit a lessee to continue in possession of leased premises after the expiration of his term, against the demand of his landlord and in direct opposition to the covenants of the lease, so long as he pays the rent and performs the conditions as fixed by the lease or as modified by a commission created by the statute. This is contrary to every conception of leases that the world has ever entertained, and of the reciprocal rights and obligations of lessor and lessee.

As already declared, the provisions of the Constitution seem so direct and definite as to need no reinforcing words and to leave no other inquiry than, Does the statute under

review come within their prohibition? It is asserted, that the statute has been made necessary by the conditions resulting from the "Imperial German war." The thought instantly comes that the country has had other wars with resulting embarrassments, yet they did not induce the relaxation of constitutional requirements nor the exercise of arbitrary power. Constitutional restraints were increased, not diminished. However, it may be admitted that the conditions presented a problem and induced an appeal for government remedy. But we must bear in mind that the Constitution is, as we have shown, a restraint upon government, purposely provided and declared upon consideration of all the consequences of what it prohibits and permits, making the restraints upon government the rights of the governed. And this careful adjustment of power and rights makes the Constitution what it was intended to be and is, a real charter of liberty, receiving and deserving the praise that has been given it as "the most wonderful work ever struck off at any given time by the brain and purpose of man." And we add that more than a century of trial "has certainly proven the sagacity of the constructors, and the stubborn strength of the fabric."

The "strength of the fabric" can not be assigned to any one provision, it is the contribution of all, and, therefore, it is not the expression of too much anxiety to declare that a violation of any of its prohibitions is an evil—an evil in the circumstance of violation, of greater evil because of its example and malign instruction. And against the first step to it this court has warned, expressing a maxim of experience,—"*Withstand beginnings.*" *Boyd* v. *United States*, 116 U. S. 616, 635. Who can know to what end they will conduct?

The facts of this litigation point the warning. Recurring to them, we may ask, Of what concern is it to the public health or the operations of the Federal Government who

shall occupy a cellar, and a room above it, for business purposes in the City of Washington?—(the question in this case); and, Why is it the solicitude of the police power of the State of New York to keep from competition an apartment in the City of New York?—(the question in the other case). The answer is, to supply homes to the homeless. It does not satisfy. If the statute keeps a tenant in, it keeps a tenant out, indeed, this is its assumption. Its only basis is, that tenants are more numerous than landlords and that in some way this disproportion, it is assumed, makes a tyranny in the landlord, and an oppression to the tenant, notwithstanding the tenant is only required to perform a contract entered into, not under the statute, but before the statute; and that the condition is remedied by rent fixing—value adjustment—by the power of the Government. And this, it is the view of the opinion, has justification because "space in Washington is limited" and "housing is a necessary of life." A causative and remedial relation in the circumstances we are unable to see. We do see that the effect and evil of the statute is that it withdraws the dominion of property from its owner, superseding the contracts that he confidently made under the law then existing and subjecting them to the fiat of a subsequent law.

effect + evil of K

If such exercise of government be legal, what exercise of government is illegal? Houses are a necessary of life, but other things are as necessary. May they too be taken from the direction of their owners and disposed of by the Government? Who supplies them, and upon what inducement? And, when supplied, may those who get them under promise of return, and who had no hand or expense in their supply, dictate the terms of retention or use, and be bound by no agreement concerning them?

An affirmative answer seems to be the requirement of the decision. If the public interest may be concerned, as in the statute under review, with the control of any form

of property, it can be concerned with the control of all forms of property. And, certainly, in the first instance, the necessity or expediency of control must be a matter of legislative judgment. But, however, not to go beyond the case—if the public interest can extend a lease it can compel a lease; the difference is only in degree and boldness. In one as much as in the other, there is a violation of the positive and absolute right of the owner of the property. And it would seem, necessarily, if either can be done, unoccupied houses or unoccupied space in occupied houses can be appropriated. The efficacy of either to afford homes for the homeless cannot be disputed. In response to an inquiry from the bench, counsel replied that the experiment had been tried or was being tried in a European country. It is to be remembered, that the legality of power must be estimated not by what it will do but by what it can do.

The prospect expands and dismays when we pass outside of considerations applicable to the local and narrow conditions in the District of Columbia. It is the assertion of the statute that the Federal Government is embarrassed in the transaction of its business, but, as we have said, a New York statute is submitted to us and counsel have referred to the legislation of six other States. And, there is intimation in the opinion that Congress in its enactment has imitated the laws of other countries. The facts are significant and suggest the inquiry, Have conditions come, not only to the District of Columbia, embarrassing the Federal Government, but to the world as well, that are not amenable to passing palliatives, so that socialism, or some form of socialism, is the only permanent corrective or accommodation? It is indeed strange that this court, in effect, is called upon to make way for it and, through the instrument of a constitution based on personal rights and the purposeful encouragement of individual incentive and energy, to declare legal a power exerted for their destruc-

tion. The inquiry occurs, Have we come to the realization of the observation that "War unless it be fought for liberty is the most deadly enemy of liberty?"

But, passing that, and returning to the Constitution, it will be observed, as we have said, that its words are a restraint upon power, intended as such in deliberate persuasion of its wisdom as against unrestrained freedom.

And it is significant that it is not restraint upon a "Governing One" but restraint upon the people themselves, and in the persuasion, to use the words of one of the supporters of the Constitution, that "the natural order of things is for liberty to yield and for government to gain ground." Sinister interests, its conception is, may move government to exercise; one class may become dominant over another; and, against the tyranny and injustice that will result, the framers of the Constitution believed precautions were as necessary as against any other abuse of power. And so careful is it of liberty that it protects in many provisions the individual against the magistrate.

Has it suddenly become weak—become, not a restraint upon evil government, but an impediment to good government? Has it become an anachronism, and is it to become "an archæological relic," no longer to be an efficient factor in affairs but something only to engage and entertain the studies of antiquarians? Is not this to be dreaded —indeed will it not be the inevitable consequence of the decision just rendered? Let us see what it justifies, and upon what principle! But first and preliminary to that inquiry are the provisions it strikes down. We have given them, but we repeat them. By § 10 of Article I it is provided, "No State shall . . . pass any . . . law impairing the obligation of contracts, . . ." By the Fifth Amendment, no person can be deprived of property without due process of law. The prohibitions need no strengthening comment. They are as absolute as axioms. A contract existing, its obligation is impreg-

prob w/ constr

nable. The elements that make a contract or its obligation we need not consider. The present case is concerned with a lease, and that a lease is a contract we do not pause to demonstrate either to lawyers or to laymen, nor that the rights of the lessor are the obligations of the lessee, and, of course, the rights of the lessee are the obligations of the lessor—the mutuality constituting the consideration of the contract—the inducement to it and its value, no less to the lessee than to the lessor.

fact sum

What were the rights and obligations in the present case and what was the right of Hirsh to control his property? Hirsh is the purchaser of a lot in the City of Washington; Block is the lessee of the lot and he agreed that at the end of his tenancy he would surrender the premises, and this and "each and every one of the covenants, conditions and agreements," he promised "to keep and perform." Hirsh at the end of the term demanded possession. It was refused, and against this suit to recover possession there was pleaded the statute. The defense prevailed in the trial court; the statute was declared unconstitutional in the Court of Appeals. It is sustained by the decision just announced.

It is manifest, therefore, that by the statute the Government interposes with its power to annul the covenants of a contract between two of its citizens and to transfer the uses of the property of one and vest them in the other. The interposition of a commission is but a detail in the power exerted—not extenuating it in any legal sense—indeed, intensifies its illegality, takes away the right to a jury trial from any dispute of fact.

If such power exist, what is its limit and what its consequences? And by consequences we do not mean who shall have a cellar in the City of Washington or who shall have an apartment in a million-dollar apartment house in the City of New York, but the broader consequences of unrestrained power and its exertion against property, having

example in the present case, and likely to be applied in other cases. This is of grave concern. The security of property, next to personal security against the exertions of government, is of the essence of liberty. They are joined in protection, as we have shown, and both the National Government (Fifth Amendment) and the States (Fourteenth Amendment) are forbidden to deprive any person "of life, liberty, or property, without due process of law," and the emphasis of the Fifth Amendment is that private property cannot be "taken for public use, without just compensation." And, in recognition of the purpose to protect property and the rights of its owner from governmental aggression, the Third Amendment provides, "No soldier shall, in time of peace be quartered in any house, without the consent of the owner, nor in time of war, but in a manner to be prescribed by law."

There can be no conception of property aside from its control and use, and upon its use depends its value. *Branson* v. *Bush*, 251 U. S. 182, 187. Protection to it has been regarded as a vital principle of republican institutions. It is next in degree to the protection of personal liberty and freedom from undue interference or molestation. *Chicago, Burlington & Quincy R. R. Co.* v. *Chicago*, 166 U. S. 226. Our social system rests largely upon its sanctity, "and that State or community which seeks to invade it will soon discover the error in the disaster which follows." *Knoxville* v. *Knoxville Water Co.*, 212 U. S. 1, 18.

There is not a contention made in this case that this court has not pronounced untenable. An emergency is asserted as a justification of the statute and the impairment of the contract of the lease. A like contention was rejected in *Ex parte Milligan*, 4 Wall. 2. It was there declared (page 120) "that the principles of constitutional liberty would be in peril, unless established by irrepealable law." And it was said that "the Constitution of the United States is a law for rulers and people, equally in war

and in peace, and covers with the shield of its protection all classes of men, at all times, and under all circumstances. No doctrine, involving more pernicious consequences, was ever invented by the wit of man than that any of its provisions can be suspended during any of the great exigencies of government."

But what is the power that is put in opposition to the Constitution and supersedes its prohibitions? It is not clear from the opinion what it is. The opinion gives to the police power a certain force but its range is not defined. Circumstances, it is said, "have clothed the letting of buildings in the District of Columbia with a public interest so great as to justify regulation by law," though at other times and places such letting may be only of private concern; and the deduction is justified, it is said, by analogy to the business of insurance, the business of irrigation and the business of mining. *German Alliance Insurance Co.* v. *Lewis*, 233 U. S. 389; *Clark* v. *Nash*, 198 U. S. 361; *Strickley* v. *Highland Boy Gold Mining Co.*, 200 U. S. 527. It is difficult to handle the cases or the assertion of what they decide. An opposing denial only is available.

To us the difference is palpable between life insurance and the regulation of its rates by the State and the exemption of a lessee from the covenants of his lease with the approval of the State, in defiance of the rights of the lessor. And as palpably different is the use of water for mining or irrigation or manufacturing, and eminent domain exercised for the procurement of its means with the requirement of compensation, and as palpably different is eminent domain, with attendant compensation, exercised for railways and other means for the working of mines.

And there is less analogy in laws regulating the height of buildings in business sections of a city; or the requirement of boundary pillars in coal mines to safeguard the employees of one in case the other should be abandoned and allowed to fill with water; or the regulation of bill-boards

135. McKENNA, J., WHITE, Ch. J., and others, dissenting.

in cities on account of their menace to morality, health and decency (in what way it is not necessary to specify); or the keeping clear of watersheds to protect the water reservoirs of cities from damage by devastating fires or the peril of them, from accumulation of "tree tops, boughs and lops" left upon the ground.[1]

The cases and their incidents hardly need explanatory comment. They justify the prohibition of the use of property to the injury of others, a prohibition that is expressed in one of the maxims of our jurisprudence. Such use of property is, of course, within the regulating power of government. It is one of the objects of government to prevent harm by one person to another by any conduct.

The police power has some pretense for its invocation. Regarding alone the words of its definition, it embraces power over everything under the sun, and the line that separates its legal from its illegal operation can not be easily drawn. But it must be drawn. To borrow the illustration of another, the line that separates day from night can not be easily discerned or traced, yet the light of day and the darkness of night are very distinct things. And as distinct in our judgment is the puissance of the Constitution over all other ordinances of power, and as distinct are the cited cases from this case; and if they can bear the extent put upon them, what extent can be put upon the case at bar or upon the limit of the principle it declares? It is based upon the insistency of the public interest and its power. As we understand, the assertion is, that legislation can regard a private transaction as a matter of public interest. It is not possible to express the possession or exercise of more unbounded or irresponsible power. It is true, in mitigation of this declaration and of the alarm that it causes, it is said that the declara-

[1] *Welch* v. *Swasey*, 214 U. S. 91; *Plymouth Coal Co.* v. *Pennsylvania*, 232 U. S. 531; *St. Louis Poster Advertising Co.* v. *St. Louis*, 249 U. S. 269; *Perley* v. *North Carolina*, 249 U. S. 510.

tion is not necessarily conclusive on the courts, but "is entitled, at least, to great respect." This is intangible to measurement or brief answer. But we need not beat about in generalities or grope in their indetermination in subtle search for a test of a legal judgment upon the conditions, or the power exerted for their relief. "The Rent Law" is brought to particularity by the condemnation of the Constitution of the United States. Call it what you will—an exertion of police or other power—nothing can absolve it from illegality. Limiting its duration to two years certainly cannot. It is what it does that is of concern. Besides, it is not sustained as the expedient of an occasion, the insistence of an emergency, but as a power in government over property based on the decisions of this court whose extent and efficacy the opinion takes pains to set forth and illustrate. And as a power in government, if it exist at all, it is perennial and universal and can give what duration it pleases to its exercise, whether for two years or for more than two years. If it can be made to endure for two years, it can be made to endure for more. There is no other power that can pronounce the limit of its duration against the time expressed in it, and its justification practically marks the doom of judicial judgment on legislative action.

pick w/ no time limit

The wonder comes to us, What will the country do with its new freedom? Contracts and the obligation of contracts are the basis of its life and of all its business, and the Constitution, fortifying the conventions of honor, is their conserving power. Who can foretell the consequences of its destruction or even question of it? The case is concerned with the results of the German war and we are reminded thereby that there were contracts made by the National Government in the necessity or solicitude of the conduct of the war—contracts into which patriotism eagerly entered, but, it may be, interest was enticed, by the promise of exemp-

tion from a burden of government. Burdens of government are of the highest public interest, and their discharge is of imperious necessity. Therefore, the provocation or temptation may come to those who feel them that the property of others (estimated in the millions, perhaps) should not have asylum from a share of the load. And what answer can be made to such demand within the principle of the case now decided? Their promises are as much within the principle as the lease of Hirsh is, for, necessarily, if one contract can be disregarded in the public interest every contract can be; patriotic honor may be involved in one more than in another, but degrees of honor may not be attended to—the public interest being regarded as paramount. At any rate, does not the decision just delivered cause a dread of such result and take away assurance of security and value from the contracts and their evidences? And it is well to remember that other exigencies may come to the Government making necessary other appeals. The Government can only offer the inducement and security of its bonds, but who will take them if doubt can be thrown upon the integrity of their promises under the conception of a public interest that is superior to the Constitution of the United States?

It comes to our recollection also that some States of the Union, in consummation of what is conceived to be a present necessity, have also entered into contracts of like kind. They, too, may come under a subsequent declaration of an imperious public interest and their promises be made subject to it.

The prophecy is not unjustified. This court has at times been forced to declare particular state laws void for their attempted impairment of the obligation of contracts. To accusations hereafter of such an effect of a state law this decision will be opposed, and the conception of the public interest.

Indeed, we ask, may not the State have other interests besides the nullification of contracts, and may not its police power be exerted for their consummation? If not, why not? Under the decision just announced, if one provision of the Constitution may be subordinated to that power, may not other provisions be? At any rate, the case commits the country to controversies, and their decision, whether for the supremacy of the Constitution or the supremacy of the power of the States, will depend upon the uncertainty of judicial judgment.

MARCUS BROWN HOLDING COMPANY, INC., *v.* FELDMAN ET AL.

APPEAL FROM THE DISTRICT COURT OF THE UNITED STATES FOR THE SOUTHERN DISTRICT OF NEW YORK.

No. 731. Argued March 3, 7, 1921.—Decided April 18, 1921.

1. In view of the emergency declared by the legislature and found by the District Court in this case and in like cases by the highest court of the State, the New York laws enacted on September 27, 1920, to be in effect only until November 1, 1922, and regulating rights and remedies in respect of real property occupied for dwelling purposes in and about the City of New York, do not exceed the police power of the State in requiring that only reasonable rents shall be exacted or in denying the right to maintain actions to recover possession except upon the grounds that the occupant is holding over and is objectionable, or that the owner of record, being a natural person, seeks in good faith to recover for immediate occupancy by himself and family as a dwelling, or that the action is to recover possession for the purpose of demolishing the building with intention to construct a new one. P. 198. *Block* v. *Hirsh*, *ante*, 135.
2. *Held*, that such regulation, as applied in favor of tenants holding over under an expired lease in disregard of their covenant to surrender, did

not deprive the landlord of rights under the Fourteenth Amendment or the Contract Clause of the Constitution, although the lease was executed before and expired soon after the date of the legislation and the landlord before the enactment had entered into a new lease with a third party to go into effect shortly after the expiration of the old one. P. 198.

3. The legislation does not unduly discriminate in not including cities of less than a specified population, or buildings occupied otherwise than for dwelling purposes, or buildings in course of construction. P. 198.

4. Chapter 951 of the Laws of New York of 1920, in so far as it makes it a misdemeanor for the owner of an apartment house, or his agents, etc., wilfully and intentionally to fail to furnish to the tenant of an apartment such water, heat, light, elevator, telephone, or other service as may be required by the terms of the lease and necessary to the proper and customary use of the building, cannot be said to impose involuntary service in violation of the Thirteenth Amendment. P. 199.

269 Fed. Rep. 306, affirmed.

THIS was a direct appeal, under § 266 of the Judicial Code, from a decree of the District Court in a suit brought by the owner of an apartment house in New York City for the purpose of ousting certain holding-over tenants through a mandatory injunction, and of restraining the District Attorney of the County of New York from taking criminal proceedings against the plaintiff or its agents for failure to furnish water, heat, light, elevator and other service. The defendants relied on recent legislation of New York, referred to in the opinion,[1] regulating the

[1] The following summary of the chief features of these New York "housing acts" is added for the convenience of those who desire a quick view.

C. 942, Laws of 1920, declares a public emergency to exist, and provides that summary proceedings shall not be maintainable to recover the possession of real property occupied for dwelling purposes in a city of a population of one million or more or in a city in a county adjoining such a city, except (1) where the person holding over is objectionable, (2) where the owner of record, being a natural person, desires the

rights and remedies of landlords and tenants in New York City and vicinity,—which the plaintiff assailed as unconstitutional. The District Court sustained the legislation, as it applied to the case, and dismissed the bill. See 269 Fed. Rep. 306. The facts are given in the opinion, *post*, 196.

---

premises for immediate and personal occupancy by himself and his family as a dwelling, (3) where the owner intends to demolish the premises and rebuild, or (4) where the building is to be taken over by a coöperative ownership group. The landlord must show that the proceeding is one mentioned in the enumerated exceptions. The act is inapplicable to buildings in course of construction or commenced after the date of the act, and is to be in effect only until November 1, 1922.

C. 943, Laws of 1920, regulates stays on appeals from final orders in summary dispossession proceedings.

C. 944, Laws of 1920, amending c. 136, Laws of 1920:

Section 1, after reciting the existence of a public emergency, declares that it shall be a defense to an action for rent accruing under an agreement for premises in a city of the first class, etc., occupied for dwelling purposes, that such rent is unjust and unreasonable and that the agreement under which the same is sought to be recovered is oppressive.

Section 2 requires the landlord, where the defense of unreasonable rent is set up, to file a bill of particulars setting forth certain material facts relevant to the issue of the reasonableness of the rent.

Section 3 provides that where it appears that the rent has been increased over the rent as it existed one year prior to the time of the agreement under which the rent is sought to be recovered, such agreement shall be presumptively unjust, unreasonable and oppressive.

Section 4 permits the landlord to plead and prove in such action a fair and reasonable rent and to recover judgment therefor, or to institute a separate action for the recovery thereof.

Section 5. Where, in an action for rent or rental value, the landlord secures judgment by default, he shall, in addition to a money judgment, be put in possession if payment be not promptly made.

Section 6. If, in such action for rent or rental value, the issue of reasonableness of the amount demanded be raised by the defendant, he must deposit in court a sum equal to the amount paid as last month's rent or the rent reserved as the monthly rent in the agreement under which he obtained possession, such deposit to be applied to the satisfac-

Mr. Joseph A. Seidman for appellant:

From the earliest colonial days to the present time the people of the State of New York have refused to delegate to its legislative bodies the power to interfere

---

tion of the judgment rendered, or otherwise disposed of as justice requires. Where judgment is rendered for the plaintiff, if the same be not fully satisfied from the deposit or otherwise within five days after entry, the plaintiff shall be entitled to the premises and a warrant shall issue commanding the sheriff, etc., to remove all persons therefrom.

Section 7 relates to the vacation of default judgments, to vacation and amendment of process, etc., and granting of new trials.

Section 8. "In case of an appeal by the defendant, the execution of the judgment and warrant shall not be stayed unless the defendant shall deposit with the clerk of the court the amount of the judgment and thereafter monthly until the final determination of the appeal an amount equal to one month's rental computed on the basis of the judgment. The clerk shall forthwith pay to the plaintiff the amount or amounts so deposited."

Section 9 renders the act inapplicable to hotels containing 125 rooms or more or to lodging or rooming houses occupied under a hiring of a week or less.

Section 10 exempts buildings in course of construction or commenced after the date of the act. The act is to be in force only until November 1, 1922.

C. 945, Laws of 1920, allows summary dispossession proceedings for nonpayment of rent, only where the petitioner alleges and proves that the rent is no greater than the amount for which the tenant was liable for the month preceding the default, and provides for testing the reasonableness of the rent in substantially the same manner as in an action for rent, which is regulated by c. 944, *supra*. In effect only until November 1, 1922.

C. 947, Laws of 1920, limits until November 1, 1922, the action of ejectment, in substantially the same manner as c. 942, *supra*, limits summary proceedings.

C. 951, Laws of 1920, amending § 2040 of the Penal Law, makes it a misdemeanor for any lessor or his agents, etc., wilfully or intentionally to fail to furnish necessary hot or cold water, heat, light, power, elevator service, telephone or any other service, required by the lease, or wilfully and intentionally to interfere with the quiet enjoyment of the leased premises by the occupant.

with the recognized rights of private property. By the first state constitution, of 1777, such parts of the common law of England and the statutes of the Colony as were not repugnant to the constitution were continued. Fundamental and acknowledged principles were perpetuated. *Gautier* v. *Ditmar*, 204 N. Y. 20; *Waters & Co.* v. *Gerard*, 189 N. Y. 302; *Underwood* v. *Daniell*, 50 N. Y. 274.

Except in the abatement of public nuisances or to avoid imminent danger, property cannot be taken or destroyed by the legislature without compensation, and it cannot be taken even with compensation, except for public use. Constitution of New York, Art. I, §§ 1, 6; Fourteenth Amendment; *Brevoort* v. *Grace*, 53 N. Y. 245, 255; *People* v. *Fisher*, 190 N. Y. 468; *Rockwell* v. *Nearing*, 35 N. Y. 302; *Powers* v. *Bergen*, 6 N. Y. 359; *Pumpelly* v. *Green Bay Co.*, 13 Wall. 166, 177, 178; *Embury* v. *Conner*, 3 N. Y. 511.

Due process may be tested by the common law as settled in England before the Declaration of Independence, *Murray's Lessee* v. *Hoboken Land & Improvement Co.*, 18 How. 272, 276; *Lowe* v. *Kansas*, 163 U. S. 81; but our opponents are compelled to invoke decisions on laws authorized expressly by state constitutions or on powers incidental to the express powers of Congress; to rely upon the rules of Ancient Rome governing the rights of serfs and tenants who were mere slaves, upon the Irish Land Bills, and upon laws enacted here and by Parliament during the World War. They might have gone further and asked us to adopt as laws the decrees of Soviet Russia.

Wherever legislation has been sustained as necessary to secure the health, welfare, safety, and good order of the community, it was prospective and not retroactive; it related to future conduct and did not affect past transactions, except where enacted by express consti-

tutional authority. *Buffalo* v. *Chadeayne*, 134 N. Y. 163. Retroactive legislation destroys vested rights and interests in property. The police power is a regulatory power. Again, legislation under police power must be for the general public and not for a particular class or for the benefit of private individuals. *Eubank* v. *Richmond*, 226 U. S. 137.

The State may not, except in the case of monopolies and public utilities, compel the sale of merchandise or license the use of private property, even for compensation. *Terminal Taxicab Co.* v. *District of Columbia*, 241 U. S. 252, 256; *Producers Transportation Co.* v. *Railroad Commission*, 251 U. S. 228, 252; *Chesapeake & Potomac Telephone Co.* v. *Manning*, 186 U. S. 238, 247.

We are told that what shall be regulated depends entirely upon the peculiar economic and social conditions of the times. If once the door shall be opened to that doctrine, all significance of the constitutional guaranty will be lost. "Illegitimate and unconstitutional practices get their first footing . . . by silent approaches and slight deviations from legal modes of procedure." *Boyd* v. *United States*, 116 U. S. 616, 635.

It is true that shelter is as much a necessity as bread, and it is contended that it is an obligation of the State to see that its citizenry does not lack such necessities. But it is not contended that the State should provide them gratis for physically and mentally able citizens. Should not the State afford gainful employment to those who lack such necessities? Or is the trader or manufacturer to be compelled by law to do so, or the banking institutions to furnish the needed money?

If in the opinion of the legislature the alleged emergency justified the exercise of the power of eminent domain, it should have authorized the taking of the property for public use in accordance with the state constitution. *Stell* v. *Mayor*, 95 N. J. L. 38.

The sponsors of the legislation urge "emergency" to silence the laws while citizens are being deprived of their property rights. They demand that constitutional bulwarks created for the protection of liberty and property be destroyed because of an alleged "public necessity," for alleged humanitarian causes. Similar distressing conditions and alleged "emergencies" were urged before this court (*Edwards* v. *Kearzey*, 96 U. S. 595, 604) in support of the Homestead Exemption Laws of North Carolina to uphold their constitutionality in so far as they affected obligations contracted before they came into effect. Mr. Justice Swayne, who delivered the majority opinion, went into the history of the country preceding the adoption of the Constitution, in order to show that the very purpose of the constitutional prohibitions was to prevent legislatures from meddling with private business and from tampering with obligations of contract in times of stress.

It often happens that a contract becomes impossible of performance because of a law subsequently enacted. There is a consequent impairment of performance, *Louisville & Nashville R. R. Co.* v. *Mottley*, 219 U. S. 467, 482, 484, but not of obligation. The statutes now under consideration impair the obligation, and not merely the performance of the obligation. The legislature left the tenant free to perform his obligation, if he so desired, but at the same time it discharged him from that obligation for the sole purpose of preventing its enforcement by the lessor. The law operates directly upon the contract,—destroys it completely without prohibiting its performance. The impairment of the obligation is not the indirect result of police regulation of the conduct of particular business. These laws were not enacted for the regulation of the business of the landlord.

The legislature assumed authority to discharge the obligation of the tenant to surrender possession on the

expiration of the term specified in the lease; to make a trespass a lawful possession; to extend all of the lessor's obligations while the holdover desires to continue in possession; to prevent the lessor from performing his obligation under another lease entered into before the enactment of the law, which by its terms was to become operative after the date of this enactment. In exercising this power the legislature has not imposed upon the person holding over the obligation to pay the rent reserved in his lease, the stipulated rental value as fixed by the parties is disregarded. The power to fix the rental value is delegated to a court or jury. Such innovations are clearly repugnant to the Constitution. *Wilmington & Weldon R. R. Co.* v. *King*, 91 U. S. 3, 5; *Effinger* v. *Kenney*, 115 U. S. 566, 571.

The rule has always been that, as a State cannot enact a law acting directly upon the terms of the contract, so also it cannot pass a law professing to regulate the remedy when, in effect, it impairs the obligation of the contract. *Gantly* v. *Ewing*, 3 How. 707; *Barnitz* v. *Beverly*, 163 U. S. 118; *Nelson* v. *St. Martin's Parish*, 111 U. S. 716; *McGahey* v. *Virginia*, 135 U. S. 662; *Kring* v. *Missouri*, 107 U. S. 221; *Fletcher* v. *Peck*, 6 Cranch, 87, 138; *People* v. *Batchellor*, 53 N. Y. 128, 140; *Brevoort* v. *Grace*, 53 N. Y. 245; *Adair* v. *United States*, 208 U. S. 161, 173.

Upon the failure of the tenants to surrender possession on September 30, 1920, the plaintiff had at least five remedies, namely: (1) To treat the tenancy as one at will or sufferance and terminate it by giving the notice required by statute (unnecessary at common law, *Reckhow* v. *Schanck*, 43 N. Y. 448); (2) to treat the lease as renewed for another year (*Herter* v. *Mullen*, 159 N. Y. 28); (3) to reënter and by use of reasonable force eject the occupants; (4) to maintain the common-law action of ejectment; or (5) to sue in trespass for damages. The law then in force assured to the owner the right to

possession on the expiration of the term, and imposed upon the tenant the obligation to surrender. That right could not be taken or the obligation destroyed without due process of law. *Muhlker* v. *New York & Harlem R. R. Co.*, 197 U. S. 544, 570; *Barson* v. *Mulligan*, 198 N. Y. 23, 25; *Adams* v. *Cohoes*, 127 N. Y. 175, 182. For a breach of the covenant to surrender the lessor was entitled to recover damages. *Vernon* v. *Brown*, 40 App. Div. 204. All of these rights were secured to the plaintiff and its grantors under the common law in force at the time of the adoption of the State and Federal Constitutions. They were annexed to the contract at the time it was made. *Bronson* v. *Kinzie*, 1 How. 311; *McCracken* v. *Hayward*, 2 How. 608; *Walker* v. *Whitehead*, 16 Wall. 314. Forfeitures of such rights in property cannot be adjudged by legislative act, and confiscations without a judicial hearing after due notice are void. Yet this is exactly what these innovations undertake to do. The person applying for his remedies is not permitted to come into court. *Gilman* v. *Tucker*, 128 N. Y. 190, 205; *Missouri Pacific Ry. Co.* v. *Humes*, 115 U. S. 512, 521.

Statutes affecting remedies which do not impair the obligation of contract may be constitutionally valid, provided a reasonable time be allowed before the change or repeal of remedy takes effect. Cooley, Const. Lim., 6th ed., p. 431; *Wheeler* v. *Jackson*, 137 U. S. 245; *Antoni* v. *Greenhow*, 107 U. S. 769. Usury has been regarded with abhorrence from the earliest times, and yet any law declaring a transaction illegal because of usury, which was legal when made, would be constitutionally void. *Sturges* v. *Crowninshield*, 4 Wheat. 122, 206; *Van Rensselaer* v. *Snyder*, 13 N. Y. 299; *Conkey* v. *Hart*, 14 N. Y. 22; *Von Hoffman* v. *Quincy*, 4 Wall. 535, 552. These laws clog not only the right to recover possession, but also the right to recover the rent voluntarily agreed upon by the contracts in force when they were enacted.

"The general right to make a contract in relation to his business is part of the liberty of the individual protected by the Fourteenth Amendment." *Lochner* v. *New York*, 198 U. S. 45, 53. In all such cases as *German Alliance Insurance Co.* v. *Lewis*, 233 U. S. 389; *Mobile* v. *Yuille*, 3 Ala. N. S. 140; *Louisana Bread Case*, 12 La. Ann. 432, the control of the property was left entirely to the owner engaged in the particular business regulated. In the *Lewis Case* the court points out that the business of insurance is essentially different from ordinary commercial transactions, and, according to the sense of the world from the earliest times,—certainly the sense of the modern world,—is of the greatest public concern. It was not a private business, but "clothed with a public interest," and therefore subject "to be controlled by the public for the common good."

If the leasing of dwelling houses and apartments were a business charged with a public use, the legislation would be nevertheless unconstitutional, because it inhibits the owner from withdrawing his property from the alleged public use. *Munn* v. *Illinois*, 94 U. S. 113, 126, 133; *Budd* v. *New York*, 143 U. S. 517, 536. It compels him to continue the business with persons with whom he does not desire to deal. The owner's intention cannot possibly be determined, as to whether he desires to continue the business of renting dwelling houses, until the possession of his property is restored to him.

These laws are also unconstitutional because they violate the guaranty of equal protection of the laws in disregard of the Fourteenth Amendment. *Connolly* v. *Union Sewer Pipe Co.*, 184 U. S. 540, 558, 559. The right to maintain summary proceedings and actions of ejectment is still reserved to that class of landowners who may desire to destroy their buildings for the purpose of erecting new buildings, to those desiring the premises for personal occupancy and to owners of office, factory

or other buildings occupied for business purposes and to owners of hotel property; to every owner of property in cities of the third class and in some instances to the owners of property in cities of the second class; to owners of buildings now in course of construction or which may hereafter be erected. The housing conditions and congestion prevail all over the country and in every city in the State of New York. Therefore, there was no reasonable ground for the classification.

Assuming that the State has the power, directly or indirectly, to subsidize new buildings either by cash payments or by remission of taxes, it has no power to discriminate between the owners of existing buildings and the owners of buildings to be erected, in respect of their compensation for the use of their property. *Merchants' & Manufacturers' Bank* v. *Pennsylvania*, 167 U. S. 461, 463; *Cotting* v. *Kansas City Stock Yards Co.*, 183 U. S. 79, 112.

The legislation creates involuntary servitude, prohibited by the Thirteenth Amendment. The legislature, by c. 951, has practically made landlords persons subject to compulsory service, who must serve "statutory tenants" in possession of their property, against their will and consent. *Clyatt* v. *United States*, 197 U. S. 207, 216. This legislation in effect declares a suspension for a period of two years of the landowner's civil rights guaranteed to him by the State and Federal Constitutions, which secure to him the liberty to refuse business relations with anyone with whom he does not desire to contract. Similar legislation has been condemned. *Adair* v. *United States*, 208 U. S. 161; *Bailey* v. *Alabama*, 211 U. S. 452; *People* v. *Marcus*, 185 N. Y. 257.

No emergency can justify an exercise of legislative power to compel one man to render involuntary service to another. *Ex parte Milligan*, 4 Wall. 2, 18.

Mr. David L. Podell, with whom *Mr. Samuel R. Gerstein*, *Mr. Martin C. Ansorge*, *Mr. Benjamin S. Kirsh* and *Mr. J. J. Podell* were on the brief, for the tenant appellees.

Mr. Robert S. Johnstone and *Mr. John Caldwell Myers* filed a brief on behalf of Edward Swann, as District Attorney of the County of New York, appellee:

The District Court had no jurisdiction to entertain the suit as it did not appear that the matter in controversy exceeded three thousand dollars.

The complainant has a plain, adequate and complete remedy at law.

Chapter 951, Laws of New York 1920, is a valid exercise of the State's police power. *Price* v. *Illinois*, 238 U. S. 446, 451; *Sligh* v. *Kirkwood*, 237 U. S. 52, 59; *Chicago & Alton R. R. Co.* v. *Tranbarger*, 238 U. S. 67; *Manigault* v. *Springs*, 199 U. S. 473, 480; *Tenement House Department* v. *Moeschen*, 179 N. Y. 325.

Mr. William D. Guthrie, with whom *Mr. Julius Henry Cohen*, *Mr. Elmer G. Sammis* and *Mr. Bernard Hershkopf* were on the brief, for the Attorney General of the State of New York, by special leave of court:

The existence of an emergency in the City of New York and the evidence of the shortage of housing accommodations and the danger to be apprehended from widespread evictions are exhibited by the official reports, such as the messages of the Governor to the legislature, the reports of his Reconstruction Commission, the reports of the Joint Legislative Committee on Housing, the report of the Mayor's Committee on Rent Profiteering in the City of New York, and the bulletins of the Health Department of the City of New York.

Perhaps no legislation was ever passed by the legislature which was the subject of more exhaustive investigation, and the reports above referred to are, therefore,

entitled to even greater weight than is usually accorded such official findings and documents. *Wilson* v. *New*, 243 U. S. 332; *McLean* v. *Arkansas*, 211 U. S. 539, 547, 548; *People* v. *Charles Schweinler Press*, 214 N. Y. 395, 402; *Cockcroft* v. *Mitchell*, 187 App. Div. 189, 193.

In view of the facts thus revealed it cannot be reasonably doubted that a shortage of housing facilities still exists and it can hardly be seriously suggested that the legislature was acting arbitrarily in fixing November 1, 1922, as the probable duration of the emergency or crisis. Longer periods have been adopted in some jurisdictions. If the prediction does not square with the facts as they develop in the future, the courts can grant relief, even if the legislature should neglect to do so. *Castle* v. *Mason*, 91 Oh. St. 296, 303. See also *Sullivan* v. *Shreveport*, 251 U. S. 169, 171; *Hamilton* v. *Kentucky Distilleries Co.*, 251 U. S. 146, 162; *Johnson* v. *Gearlds*, 234 U. S. 422, 446; *Perrin* v. *United States*, 232 U. S. 478, 486; *Municipal Gas Co.* v. *Public Service Commission*, 225 N. Y. 89, 95, 97. It may not, however, be presumed that when that time comes the legislature will not itself repeal these laws.

In determining the constitutionality of statutes passed in the exercise of the police power, the courts have attached much weight to analogous legislation in other countries enacted to remedy similar conditions or to meet similar governmental problems. *Muller* v. *Oregon*, 208 U. S. 412, 419, 420; *People* v. *Charles Schweinler Press*, 214 N. Y. 395, 403. The conditions in New York City were the same as those which existed in all congested centers throughout the world as a result of the World War. Like causes had produced like effects.

Neither the contract clause nor the due process clause of the Constitution abridges the power or duty of the legislature to enact appropriate and necessary laws in order to protect the health, safety, order, morals, or gen-

eral welfare of the public. *Hadacheck* v. *Los Angeles*, 239 U. S. 394, 409, 410; *Nechamcus* v. *Warden*, 144 N. Y. 529, 535; *Louisville & Nashville R. R. Co.* v. *Mottley*, 219 U. S. 467; *Producers Transportation Co.* v. *Railroad Commission*, 251 U. S. 228, 232; *Union Dry Goods Co.* v. *Georgia Public Service Corporation*, 248 U. S. 372, 375.

Laws which forbade the erection of certain types of buildings, which prohibited certain kinds of businesses, fixed certain prices, abolished certain valuable remedies, like distress, etc., have all been uniformly upheld as valid exercises of the police power notwithstanding the fact that they seriously impaired or wholly wiped out pre-existing private contracts. The only inquiry has been whether the statute in question was a proper exercise of the power of government, that is, whether in any aspect it could be regarded as passed in the public interest and as reasonably calculated to subserve that interest, due allowance being made for the broad discretion vested in the legislative body in these respects, and whether the means were reasonably appropriate and adapted to a legitimate end. If it were possible for individuals to estop due exercises of governmental power by private contracts, private agreements could impair the legislative power in practically all classes of cases.

Nor is the question to be decided put upon any different basis by urging that the statutes interfere with the liberty of contract as distinguished from the impairment of contract. That right is and may also be qualified and limited in the public interest. *Chicago, Burlington & Quincy R. R. Co.* v. *McGuire*, 219 U. S. 549, 567; *McLean* v. *Arkansas*, 211 U. S. 539, 545; *Rail & River Coal Co.* v. *Ohio Industrial Commission*, 236 U. S. 338, 349.

Equally immaterial is it that the statutes interfere with property rights. That, too, may be lawfully done by the legislature in the reasonable exercise of its police power. It constitutes but a taking by due process of

law if it be really a taking at all.—Citing many cases, including: *Chicago, Burlington & Quincy Ry. Co.* v. *Drainage Commissioners*, 200 U. S. 561, 593; *Nechamcus* v. *Warden*, 144 N. Y. 529, 535; *In re Wilshire*, 103 Fed. Rep. 620, 622; *Noble State Bank* v. *Haskell*, 219 U. S. 104, 111; *People* v. *Griswold*, 213 N. Y. 92, 96, 97; *Armour & Co.* v. *North Dakota*, 240 U. S. 510, 513; *Chicago, Burlington & Quincy R. R. Co.* v. *McGuire*, 219 U. S. 549, 569. Here the State requires only such a concession as it has been repeatedly held by this court government is constitutionally entitled to require, namely, a concession appropriate to "exceptional times and places in which the very foundations of public welfare could not be laid without requiring concessions from individuals to each other upon due compensation which under other circumstances would be left wholly to voluntary consent." *Strickley* v. *Highland Boy Gold Mining Co.*, 200 U. S. 527, 531. See also *Clark* v. *Nash*, 198 U. S. 361; *Noble State Bank* v. *Haskell*, 219 U. S. 104, 110.

There is no force in the contention that these laws are solely in the private, as contrasted with the public, interest because they redound to the benefit of private parties, namely, tenants. Use by the general public is inadequate as a universal test. *Strickley* v. *Highland Boy Gold Mining Co.*, 200 U. S. 527, 531. Witness the usury laws, laws regulating railroad rates, tenement house laws, and the employers' liability acts.

Courts are not at liberty to circumscribe the police power by impracticable points of view or by unreasonably pressing the alleged "absolute" rights of property. The police power exists to meet the practical problems which arise from day to day; and the science of government consists in adjusting relative rights and duties in order "to promote the general welfare." *Noble State Bank* v. *Haskell, supra.*

These laws are not unreasonable in laying the burden

on the landlord of showing that the rent is reasonable, or in preventing him from retaking possession oppressively, where he does not require it for his own use or to rebuild, and where the tenant is not objectionable. In every fair and reasonable situation he may have his property; but where he desires to evict without reason, the law prohibits his doing so during the shortage and crisis, provided the tenant pays the reasonable rental value of the premises.

If these enactments appear in any aspect extraordinary, it is only because the crisis is unprecedented; and it was long ago declared that (*Legal Tender Cases*, 12 Wall. 457, 540) "It is not to be denied that acts may be adapted to the exercise of lawful power, and appropriate to it, in seasons of exigency, which would be inappropriate at other times." See *American Land Co.* v. *Zeiss*, 219 U. S. 47, 60; *Wilson* v. *New*, 243 U. S. 332, 347, 348; *Bowditch* v. *Boston*, 101 U. S. 16, 18, 19; *Edmonson* v. *Ferguson*, 11 Missouri, 344, 346; *Breitenbach* v. *Bush*, 44 Pa. St. 313, 318, 319; *Hoffman* v. *Charlestown Five Cents Savings Bank*, 231 Massachusetts, 324; Soldiers & Sailors Civil Relief Act, 40 Stat. 444, §§ 100, 103, 201, 302; *Weed & Co.* v. *Lockwood*, 266 Fed. Rep. 785, 788; c. 80, § 2, 41 Stat. 297. From time immemorial, a feeble tenantry have been protected from oppression during times of emergency or misfortune.

One of the inherent and fundamental purposes of all civilized government is to prevent extortion and oppression and to safeguard the public; and in the light of that principle all constitutions must, of course, be read. It was early realized that there were many callings and businesses to which the public necessarily had to resort and in which, therefore, they had an interest. If these were to be left undisturbed by the law, it was patent that they would in numerous instances have practically unlimited power to oppress the public. Accordingly,

government was called upon to protect the public from extortion, and both then and now callings and property charged with a public interest have been regulated by the State. What shall be so regulated depends entirely upon the peculiar economic and social conditions of the times. See c. I, Wyman's "Public Service Corporations."

It was not necessary that persons thus subjected to regulation should have a monopoly—though that element, if it existed, served to emphasize their capacity to do public harm at will; or that they should enjoy a special privilege or franchise—though that might serve to make clearer their duty to the public. *Munn* v. *Illinois*, 94 U. S. 113; *Budd* v. *New York*, 143 U. S. 517; *Brass* v. *Stoeser*, 153 U. S. 391; *German Alliance Insurance Co.* v. *Lewis*, 233 U. S. 389, 411.

The public interest which warrants the regulation of such ordinary, private, competitive and unfranchised businesses as grain elevating (*Munn* v. *Illinois*, and *Budd* v. *New York*, *supra*), fire insurance (*German Alliance Ins. Co.* v. *Lewis*, *supra*), laundrying (*Oklahoma Operating Co.* v. *Love*, 252 U. S. 331, 337-8) bread baking (*Mobile* v. *Yuille*, 3 Ala. N. S. 140; *Louisiana Bread Case*, 12 La. Ann. 432), etc., is incomparably smaller than that which underlies the exertion of the legislative power over the business of renting apartments and houses for dwelling purposes in densely populated cities like New York. The vital principles of government, it is submitted, have not become static or fallen into decadence, but, on the contrary, are still progressive and competent to deal practically with extortion, oppression and emergency wherever and whenever they appear.

From the earliest times the British Government has never hesitated either actually to fix prices when other means proved unavailing, or to require, in general terms, that vendors of necessaries shall sell them at reasonable

prices and moderate gains. Wages, herrings, clothes, poultry, candles, hats, beer, wine, butter, cheese, bread and numerous other commodities were thus from time to time regulated as necessity required. That the power to enact such laws passed to the several States has always been recognized. And it has never been held that such regulation in time of shortage and public emergency, in order to prevent widespread public oppression and suffering, unlawfully deprived an individual of his property, merely because it prevented him from reaping the gains of an extortionate and oppressive use of his own. The vivifying principle was always in the maxim, *Sic utere tuo ut alienum non lædas.*

No one would now question the right of a State to fix the rate of interest; and it is no answer to assert that the usury laws furnish no analogy since they are in reality a relaxation of a prohibition of the common law against charging any interest at all. *German Alliance Insurance Co.* v. *Lewis*, 233 U. S. 409.

The usury laws are an illustration also of the right of the legislature to conclude that in certain relations it is in the great majority of cases impossible for the parties to deal at arms' length and with unimpaired freedom of will, and, consequently, of the right of the legislature in such instances to refuse force and effect to contracts so made or require them to be modified so as to conform to justice and fairness. *Holden* v. *Hardy*, 169 U. S. 366, 397.

The legislature certainly has the power to regulate and modify common-law and equitable defenses. *Arizona Employers' Liability Cases*, 250 U. S. 400, 421; *Van Dyke* v. *Wood*, 60 App. Div. 208, 212; *78th Street & Broadway Co.* v. *Rosenbaum*, 111 Misc. (N. Y.) 577; *American Coal Mining Co.* v. *Special Coal & Food Comm.*, 268 Fed. Rep. 563. American courts are constantly studying English history and English statutes in order to determine whether a particular exercise of legislative power is or

is not within the principle of due process of law, or is or is not arbitrary and unduly oppressive. Numerous and familiar instances will readily recur to the court. See *Murray's Lessee* v. *Hoboken Land & Improvement Co.*, 18 How. 272, 276. In giving the preference to the tenant in possession, the legislature merely legalized a long-standing social custom and restraint evidenced in the English, Irish, Scotch, Hebrew, Maryland and New York precedents, and thereby was enabled to protect its present residents in their homes from competition by nonresidents.

The classification made in the statutes is justified by the character and extent of the evil aimed at, and obvious differences in subject-matter.

Chapter 944 is not invalid because it does not specifically define what shall constitute an unreasonable rent and an oppressive agreement therefor; nor are its other provisions unfair or unreasonable.

Mr. Louis Marshall and *Mr. Lewis M. Isaacs*, by leave of court, filed a brief as *amici curiæ:*

It is safe to say that never before in the history of our country has legislation of so revolutionary a character been undertaken. Private property, devoted to purposes essentially private, is sought to be taken out of the control of the owner and to be placed in the possession and occupancy of another on terms, not in accordance with the contract between them, but such as a court or jury may fix. The legislature takes the property of A and gives it to B for an indefinite period on terms which A is unwilling to accept but which he is to be forced to accept *nolens volens*. If the tenant refuses to pay the stipulated rent, or if he holds over after the expiration of his term, the landlord cannot regain possession, because, by these acts, he has been stripped of the right to maintain a possessory action. Should he sue to recover the rent stipulated by the contract, he is met by

the defense that the terms of the contract are unjust and unreasonable, and if the amount of the stipulated rent is greater than the rent paid for the use of the premises a year prior to the date of the agreement under which the rent is sought to be recovered, he is confronted by a statutory presumption that the rent sought to be recovered is unjust and oppressive. The burden of overcoming this presumption is imposed on him. In spite of the fact that there has been an express agreement, in contravention of the well-established rule that a contract will not be implied where the parties have entered into an express contract, he has the option of either going empty out of court, should he in the opinion of an interested jury be unable to overcome this presumption, or of being left to recover for use and occupation on a *quantum meruit* in lieu of the stipulated rent. He is compelled either to submit to the determination of the tenant or to incur the expense, the vicissitudes and the delay of litigation in an effort to enforce his contract.

The statute prescribes no standards by which the justice and reasonableness and freedom from oppression which must be established in order to warrant a recovery under the laws, are to be determined.

That such standards are necessary in order that there may be due process of law is illustrated by the decisions in *International Harvester Co.* v. *Kentucky*, 234 U. S. 216; *Collins* v. *Kentucky*, 234 U. S. 634, and *American Seeding Machine Co.* v. *Kentucky*, 236 U. S. 660. See also *United States* v. *Cohen Grocery Co.*, 255 U. S. 81.

In the provision relating to a bill of particulars the essential elements entering into the ascertainment of rental value are omitted.

The legislature by these acts leaves the determination of the complicated question of rental value at a time when all prices and values of the necessaries of life have risen, with the consequent and universal irritation re-

sulting therefrom, to a court or jury with respect to each case as it may arise, without providing guide or compass or defining a standard enforceable by the owner of the property as well as by the tenant. If it should appear that the agreed rental is less than it could be proven that it legitimately might have been, the tenant can only be required to pay the stipulated rental. If during the term of the lease the prevailing rental value of the property should be enhanced, the tenant could not be required to pay more than he agreed to pay. The fact that the lease runs for a term of years and that the vicissitudes incidental to our economic life may bring about a change of conditions and of values, are necessary elements in price or rental value. Yet, under this statute, the landlord is to bear all risks and the tenant is to be enabled at will to assert the obligation of the landlord's covenant or to deny the validity of his own.

The provision that a mere increase in the rent of demised premises over the rent as it existed one year prior to the agreement under which it is sought to be recovered, renders the contract presumptively unjust, unreasonable and oppressive, is arbitrary and unreasonable and offends against the due process clause.

The practical effect of such a provision necessarily would be to invalidate a lease which provided for an increased rental unless the landlord could, on a trial before a jury, overcome this presumption by proving a negative, namely, that the agreement was not unjust, unreasonable and oppressive. That would necessitate proof in justification of the terms of the contract, the giving of testimony as to what would be a fair return upon the property which was the subject of the lease. This in turn would give rise to proof as to a multitude of elements affecting the reasonableness of the rent. It might involve an issue as to each element of value. It might call for the giving of expert testimony by both sides; and the burden of

proof would rest on the landlord. And yet the court in a case involving the regulation of rates of a common carrier, (*New York Central R. R. Co.* v. *Public Service Commission*, 215 N. Y. 241,) declared that the burden of proof that an increase of rates was reasonable could not be cast on the railroad company, even where the rates are to be fixed by an impartial commission.

If the legislature may say to the owner of a building devoted to private purposes, that he shall not be permitted to enter into a contract for the leasing of his property except on condition that the contract shall run the gauntlet of the courts and juries and that the amount that he shall be permitted to charge shall eventually be fixed by a court or jury, then it is difficult to understand why the legislature may not say to the farmer or to the grocer that, irrespective of the contract price at which he may sell to a customer milk, potatoes, wheat, or any other of his products, the purchaser may contest the reasonableness of the price and be limited in his payment to the sum that a court or jury may eventually determine to be the just and reasonable price. There is not a business conceivable, however private it may be, that could not with equal right be made dependent upon the action of the legislature.

This statute deprives the landlord of his liberty of contract and of his property without due process of law.

What is true of the taking of property is equally true of the enjoyment of the incidents and attributes of property. In the case of real property, the rents, income and profits derivable from its holding are such attributes.

Liberty, it has been frequently held, includes the right to acquire property, and that means the right to make and enforce contracts in respect thereof.

There can be no doubt that the police power has long existed and that in recent years its scope has been somewhat extended. Nevertheless it is not superior, but sub-

ject to the Constitution. This should not for a moment be forgotten, if free government under our present system is to continue. *Matter of Jacobs*, 98 N. Y. 98, 108; *Slaughter-House Cases*, 16 Wall. 36, 87; *Adair* v. *United States*, 208 U. S. 161; *People* v. *Marcus*, 185 N. Y. 257; *Coppage* v. *Kansas*, 236 U. S. 1.

We are met with the contention that the State has the right to fix the charges to be made by the owner of private property for its use, on the theory that the public welfare may be thereby promoted.

The plaintiff's property was not devoted to any public use. The various apartments constituted dwellings that were rented for private occupation to the several persons whom the owner was willing to accept as tenants. The general public had no concern with this property.

Innkeepers have from the earliest days been recognized as engaged in a public business. On the other hand, a boarding-house keeper is engaged in a private business; is, therefore, under no obligation to serve the public; is at liberty to choose his own guests, and to make special arrangements with them. Except so far as regulations relating to health and morals are concerned, he does not come within the regulatory power of the legislature.

Grist mills, also, are devoted to a public purpose. Their owners have enjoyed valuable privileges from the legislatures with respect to the erection of dams and the flowage of land.

So of the owners of bridges, ferries, and public grain elevators and warehouses, electric light plants, oil pipe lines, and other similar public utilities. The distinction between them and the owners of private property designed for private uses has been uniformly observed.

In *German Alliance Insurance Co.* v. *Lewis*, 233 U. S. 389, the business sought to be regulated was that of fire insurance. That was shown to be a business that had been regulated for many years in all parts of the

country, carried on exclusively by corporations which derived their existence from the sovereign. Theirs was conceded to be a business affecting the public welfare.

There is nothing in *Oklahoma Operating Co.* v. *Love*, 252 U. S. 331, that will support this legislation. There was not even an intimation that the corporation commission was constitutionally empowered to establish rates for laundry work. The court decided that the plaintiff was entitled to a temporary injunction restraining the enforcement of the penalties prescribed by the statute, which in effect prevented judicial review.

This court has just declared the Lever Act unconstitutional. The decision rendered is the more noteworthy because it was enacted by Congress in the exercise of the war powers conferred by the Federal Constitution. No such powers are conferred on the New York legislature.

In *Terminal Taxicab Co.* v. *District of Columbia*, 241 U. S. 252, 256, it was held that, as to that portion of the business of the corporation which consisted mainly in furnishing automobiles from its central garage on orders by telephone, the regulation was not authorized.

In *Clark* v. *Nash*, 198 U. S. 361, there was no pretense that property could be taken without compensation. The sole question was as to whether the proposed taking came within the power of eminent domain. So of *Strickley* v. *Highland Boy Gold Mining Co.*, 200 U. S. 527.

Schmidinger v. *Chicago*, 226 U. S. 578, merely involved the question whether an ordinance, enacted under express legislative authority, fixing standard sizes of bread loaves, was valid. That was regarded merely as an exercise of the police power intended to prevent deceit, and practically of the same character as that of fixing weights and measures. *Rast* v. *Van Deman & Lewis Co.*, 240 U. S. 342, which related to a special tax on trading stamps,

proceeded on the theory that their use was akin to lotteries and gaming.

The limitation of the power of the legislature to regulate the compensation of employment agencies was fully considered in *Adams* v. *Tanner*, 244 U. S. 590. See *Stell* v. *Mayor*, 95 N. J. L. 38, concerning directly the rights of landlords.

Collister v. *Hayman*, 183 N. Y. 250; *Burnham* v. *Flynn*, 189 N. Y. 180, *Woollcott* v. *Shubert*, 217 N. Y. 212, and *People* v. *Newman*, 109 Misc. (N. Y.) 622, held that a theatre is not governed by the rules which relate to public utilities and that the owners cannot be controlled as to their rates, nor be compelled to admit the public generally, nor be prevented from arbitrarily excluding any person whom they may see fit to exclude.

Many other cases might be cited as illustrating the proposition that statutes undertaking to fix the prices to be charged by private persons for services rendered or property sold cannot be sustained. *Brazee* v. *Michigan*, 241 U. S. 340; *Adams* v. *Tanner*, 244 U. S. 590; *Holter Hardware Co.* v. *Boyle*, 263 Fed. Rep. 134; *Fisher Co.* v. *Woods*, 187 N. Y. 90; *Ex parte Dickey*, 144 California, 234; *State* v. *Fire Creek Coal Co.*, 33 W. Va. 188.

Some of our opponents have indulged at some length in citations from historians, decisions and statutes dealing with conditions in European countries, as, e. g., in Ireland and Scotland. They have also referred to alleged *responsa* of rabbis rendered in mediæval times, in their capacity as arbitrators. These passages from the history of other countries, whose organic law differs fundamentally from ours, have no application here, where our legislation is necessarily governed by our written constitutions. Nor are *responsa* rendered in the exercise of an ecclesiastical as distinguished from a judical function by rabbis, who were intent upon the avoidance of conflict among members of the synagogue, of the slightest moment. The

very fact that the Jews, in the days when these arbitraments took place, could not own real property of itself indicates how far afield these alleged precedents are apt to lead one.

Nothing is clearer under our jurisprudence than that the legislature cannot carve out of existing estates, new estates, *in invitum*. It cannot confer on a tenant an equitable lien or charge against the owner's title, to take effect on the expiration of the tenancy. That would be confiscation, pure and simple. It would create the astounding doctrine, once a tenant, forever a tenant. What becomes of vested rights under such a theory? What becomes of property? The theory of a "tenant right" such as that sought to be imported into our land tenures by means of legislation has never gained a foothold here, and is foreign to our institutions as it is opposed to our constitutions. *Ives* v. *South Buffalo Ry. Co.*, 201 N. Y. 271, 287.

Assuming, but not conceding, that the taking of private property for housing purposes may be permitted for a public purpose, it can only be done upon making just compensation and in the manner provided by the Constitution.

The statute denies to the plaintiff the equal protection of the laws. There was no reasonable ground for excluding hotels, lodging houses, new buildings and buildings used for commercial, manufacturing or other business purposes; or for not extending the regulations to cities other than those included when like conditions were conceded to exist.

The act impairs the obligations of another contract. Prior to its passage the plaintiff and prospective tenants had entered into a lease at a fixed rental for a term of two years beginning October 1st, 1920. On September 27, 1920, the legislature declared this lease presumptively unjust, unreasonable and oppressive because it increased

the rent previously received by the plaintiff for these premises, and permitted the lessees to interpose this claim as a defense to any action that might be brought for the rent stipulated in the lease.

That this tends to nullify the contract between the parties and permits a court or jury to create a different contract from that which the parties agreed upon is self-evident.

The fact that the act under review recites that it is based on the existence of a public emergency does not validate it, if its provisions are violative of the Constitution.

Not only do the statements contained in the report of the Legislative Committee and in the message of the Governor, relied upon in support of this legislation, fail to justify it, but in most material respects they are contrary to the facts, and the theories therein propounded if pursued would inevitably aggravate the dearth of housing accommodations to which attention is directed.

MR. JUSTICE HOLMES delivered the opinion of the court.

This is a bill in equity brought by the Marcus Brown Holding Company, the appellant, owner of a large apartment house in the City of New York, against the tenants of an apartment in the house and the District Attorney of the County of New York. The tenants are holding over after their lease has expired, which it did on September 30, 1920, claiming the right to do so under cc. 942 and 947 of the laws of New York of 1920. The object of the bill is to have these and other connected laws declared unconstitutional. The District Attorney is joined in order to prevent his enforcing by criminal proceedings cc. 131 and 951 of the acts of the same year, which make it a misdemeanor for the lessor or any agent

or janitor intentionally to fail to furnish such water, heat, light, elevator, telephone, or other service as may be required by the terms of the lease and necessary to the proper or customary use of the building. The case was heard in the District Court by three judges upon the bill, answer, affidavits and some public documents, all of which may be summed up in a few words. The bill alleges at length the rights given to a lessor by the common law and statutes of New York before the enactment of the statutes relied upon by the tenants, a covenant by the latter to surrender possession at the termination of their lease, and due demand, and claims protection under Article I, § 10 and the Fourteenth Amendment of the Constitution of the United States. An affidavit alleges that before the passage of the new statutes another lease of the premises had been made, to go into effect on October 1, 1920. The answer of the tenants relies upon the new statutes and alleges a willingness to pay a reasonable rent and any reasonable increase as the same may be determined by a court of competent jurisdiction. It also alleges that they made efforts to obtain another suitable apartment but failed. The District Attorney moved to dismiss the bill. The judges considered the case upon the merits, upheld the laws and ordered the bill to be dismissed.

By the above mentioned cc. 942 and 947, a public emergency is declared to exist and it is provided by c. 947 that no action "shall be maintainable to recover possession of real property in a city of a population of one million or more or in a city in a county adjoining such city, occupied for dwelling purposes, except an action to recover such possession upon the ground that the person is holding over and is objectionable, . . . or an action where the owner of record of the building, being a natural person, seeks in good faith to recover possession of the same or a room or rooms therein for the im-

mediate and personal occupancy by himself and his family as a dwelling; or an action to recover premises for the purpose of demolishing the same with the intention of constructing a new building. . . ." The earlier c. 942 is similar with some further details. Both acts are to be in effect only until November 1, 1922. It is unnecessary to state the provisions of c. 944 for disputes as to what is a reasonable rent. They are dealt with in the decisions of the Court of Appeals cited below and in *Edgar A. Levy Leasing Co., Inc.* v. *Siegel*, 230 N. Y. 634, by the same Court. In this as in the previous case of *Block* v. *Hirsh*, *ante*, 135, we shall assume in accordance with the statutes, the finding of the Court below and of the Court of Appeals of the State, in *People ex rel. Durham Realty Corporation* v. *La Fetra*, 230 N. Y. 429, and *Guttag* v. *Shatzkin*, 230 N. Y. 647, that the emergency declared exists. *Hebe Co.* v. *Shaw*, 248 U. S. 297, 303. *Hairston* v. *Danville & Western Ry. Co.*, 208 U. S. 598, 607.

The chief objections to these acts have been dealt with in *Block* v. *Hirsh*. In the present case more emphasis is laid upon the impairment of the obligation of the contract of the lessees to surrender possession and of the new lease which was to have gone into effect upon October 1, last year. But contracts are made subject to this exercise of the power of the State when otherwise justified, as we have held this to be. *Manigault* v. *Springs*, 199 U. S. 473, 480. *Louisville & Nashville R. R. Co.* v. *Mottley*, 219 U. S. 467, 482. *Chicago & Alton R. R. Co.* v. *Tranbarger*, 238 U. S. 67, 76, 77. *Union Dry Goods Co.* v. *Georgia Public Service Corporation*, 248 U. S. 372, 375. *Producers Transportation Co.* v. *Railroad Commission of California*, 251 U. S. 228, 232. It is said too that the laws are discriminating, in respect of the cities affected and the character of the buildings, the laws not extending to buildings occupied for business purposes, hotel property or buildings now in course of erection, &c.

But as the evil to be met was a very pressing want of shelter in certain crowded centers the classification was too obviously justified to need explanation, beyond repeating what was said below as to new buildings, that the unknown cost of completing them and the need to encourage such structures sufficiently explain the last item on the excepted list.

It is objected finally that c. 951, above stated, in so far as it required active services to be rendered to the tenants, is void on the rather singular ground that it infringes the Thirteenth Amendment. It is true that the traditions of our law are opposed to compelling a man to perform strictly personal services against his will even when he has contracted to render them. But the services in question although involving some activities are so far from personal that they constitute the universal and necessary incidents of modern apartment houses. They are analogous to the services that in the old law might issue out of or be attached to land. We perceive no additional difficulties in this statute, if applicable as assumed. The whole case was well discussed below and we are of opinion that the decree should be affirmed.

Decree affirmed.

MR. JUSTICE MCKENNA, THE CHIEF JUSTICE, MR. JUSTICE VAN DEVANTER and MR. JUSTICE MCREYNOLDS, dissenting:

This case was submitted with *Block* v. *Hirsh*, No. 640, *ante*, 135.

Like that case it involves the right of a lessee of property—in this case an apartment in an apartment house in New York City—to retain possession of it under a law of New York after the expiration of the lease. This case is an emphasis of the other, and the argument in that applies to this. It may be more directly applica-

ble; for in this case the police power of the State is the especial invocation and the court's judgment is a concession to it, and, as we understand the opinion, in broader and less hesitating declaration of the extent and potency of that power. "More emphasis," it is said, "is laid upon the impairment of the obligation of the contract" than in the *Hirsh Case*. In measurement of this as a reliance, it is said, "But contracts are made subject to this exercise of the power of the State *when otherwise justified, as we have held this to be.*" The italics are ours and we estimate them by the cases that are cited in their explanation and support. We are not disposed to a review of the cases. We leave them in reference, as the opinion does, with the comment that our deduction from them is not that of the opinion. There is not a line in any of them that declares that the explicit and definite covenants of private individuals engaged in a private and personal matter are subject to impairment by a state law, and we submit, as we argued in the *Hirsh Case*, that if the State have such power—if its power is superior to Article I, § 10, and the Fourteenth Amendment, it is superior to every other limitation upon every power expressed in the Constitution of the United States, commits rights of property to a State's unrestrained conceptions of its interests, and any question of them—remedy against them—is left in such obscurity as to be a denial of both. There is a concession of limitation but no definition of it, and the reasoning of the opinion, as we understand it, and its implications and its incident, establish practically unlimited power.

We are not disposed to enlarge further upon the case or attempt to reconcile the explicit declaration of the Constitution against the power of the State to impair the obligations of a contract or, under any pretense, to disregard the declaration. It is safer, saner, and more consonant with constitutional preëminence and its pur-

poses to regard the declaration of the Constitution as paramount, and not to weaken it by refined dialectics, or bend it to some impulse or emergency "because of some accident of immediate overwhelming interest which appeals to the feeling, and distorts the judgment." *Northern Securities Co.* v. *United States*, 193 U. S. 197, 400.

We therefore dissent.

PRIVETT ET AL. v. UNITED STATES ET AL.

APPEAL FROM THE CIRCUIT COURT OF APPEALS FOR THE EIGHTH CIRCUIT.

No. 236. Argued March 18, 1921.—Decided April 18, 1921.

1. A homestead allotment of a half-blood Creek Indian, who died intestate leaving surviving issue, a member of the tribe, born since March 4, 1906, remains inalienable under § 9 of the Act of May 27, 1908, c. 199, 35 Stat. 312, during the lifetime of such issue, until April 26, 1931, if the Secretary of the Interior has not removed the restriction; and a deed made by the heirs in such circumstances is void. P. 203.
2. A finding that a surviving son of a Creek allottee was born since March 4, 1906, *held* sustained by the evidence. P. 203.
3. In a suit to set aside deeds of an Indian allotment made by the heirs of the allottee in contravention of a restriction on alienation imposed by Congress, wherein the validity of the conveyances depended on the date of the birth of a surviving minor son of the allottee, *held* that the United States was in no respect concluded by a finding of the date and a judgment upholding the conveyances, in a prior suit in the state court between the heirs and one claiming under the conveyances, to which suit the United States was not a party. P. 203.

261 Fed. Rep. 351, affirmed.

THE case is stated in the opinion.

Mr. Preston C. West, with whom *Mr. A. A. Davidson* was on the brief, for appellants.

Mr. Assistant Attorney General Garnett, with whom *Mr. H. L. Underwood*, Special Assistant to the Attorney General, was on the brief, for appellees.

MR. JUSTICE VAN DEVANTER delivered the opinion of the court.

The United States brought this suit to cancel conveyances made by the heirs of a Creek Indian of land allotted to him as a homestead out of the Creek tribal lands. After answer and hearing the District Court granted the relief sought and the Circuit Court of Appeals affirmed the decree. 261 Fed. Rep. 351.

The allottee was an Indian of the half blood and died intestate in 1911 leaving as his heirs a widow, an adult daughter and a minor son, all of whom were Creek Indians. Thereafter deeds purporting to convey the land to one Privett were executed by the heirs, the deed of the minor son being made by his guardian. These are the conveyances sought to be canceled, and the ground on which they are assailed is that the minor son was born after March 4, 1906, and therefore that the land passed to the heirs subject to the qualification and restriction imposed by a proviso in § 9 of the Act of May 27, 1908, c. 199, 35 Stat. 312, which declares:

"That if any member of the Five Civilized Tribes of one-half or more Indian blood shall die leaving issue surviving, born since March fourth, nineteen hundred and six, the homestead of such deceased allottee shall remain inalienable, unless restrictions against alienation are removed therefrom by the Secretary of the Interior in the manner provided in section one hereof, for the use and support of such issue, during their life or lives, until

April twenty-sixth, nineteen hundred and thirty-one; but if no such issue survive, then such allottee, if an adult, may dispose of his homestead by will free from all restrictions; if this be not done, or in the event the issue hereinbefore provided for die before April twenty-sixth, nineteen hundred and thirty-one, the land shall then descend to the heirs," etc.

The minor son is still living and, if he was born after March 4, 1906, it is conceded that the heirs took the land subject to the qualification and restriction imposed by the proviso (see *Parker* v. *Riley*, 250 U. S. 66), that there was no removal of the restriction by the Secretary of the Interior, and that the conveyances made by the heirs are void. But it is urged, first, that the evidence produced at the hearing shows that the minor son was born before, and not after, March 4, 1906, and, secondly, that, in any event, it was settled conclusively in a prior suit that he was born February 23, 1906.

The District Court found that the date of the son's birth was April 23, 1906, and the Circuit Court of Appeals acquiesced in that finding without particularly discussing the point in its opinion. The evidence has been examined and in our opinion it amply supports the finding.

The reliance on the decision in the prior suit is ill-founded. That suit was between the heirs and one who was claiming under these conveyances, the United States not being a party, and the decree therein pronounced the conveyances valid. This suit is brought by the United States in virtue of its interest in maintaining the restriction and safeguarding the Indians in the possession and enjoyment of the lands allotted out of the tribal domain. As yet the Indians have not been fully discharged from the guardianship of the United States. "During the continuance of this guardianship, the right and duty of the Nation to enforce by all appropriate means the restrictions designed for the security of the Indians cannot

be gainsaid. While relating to the welfare of the Indians, the maintenance of the limitations which Congress has prescribed as a part of its plan of distribution is distinctly an interest of the United States." *Heckman* v. *United States*, 224 U. S. 413, 437. See also *La Motte* v. *United States*, 254 U. S. 570. "And it is no longer open to question that the United States has capacity to sue for the purpose of setting aside conveyances of lands allotted to Indians under its care, where restrictions upon alienation have been transgressed. . . . Authority to enforce restrictions of this character is the necessary complement of the power to impose them. It necessarily follows that, as a transfer of the allotted lands contrary to the inhibition of Congress would be a violation of the governmental rights of the United States arising from its obligation to a dependent people, no stipulations, contracts, or judgments rendered in suits to which the Government is a stranger, can affect its interest." *Bowling* v. *United States*, 233 U. S. 528, 534–535. As the United States is here suing in its own interest, it is in no wise concluded by any matter, whether of fact or law, that may have been adjudged in the prior suit to which it was not a party.

Decree affirmed.

ATCHISON, TOPEKA & SANTA FE RAILWAY COMPANY v. UNITED STATES.

APPEAL FROM THE COURT OF CLAIMS.

No. 256. Submitted March 22, 1921.—Decided April 18, 1921.

1. In the absence of a previous arrangement with the carrier for reduced rates under § 22 of the Interstate Commerce Act, the United States, by requesting and accepting interstate railway transportation for officers and men of the Army, obligates itself to pay the rates applicable generally for like transportation, less any lawful land grant deduction. P. 206.
2. Where the only through interstate tariff rate between two places is the individual rate, through transportation of a party should be charged at that rate and cannot lawfully be charged less by combining a party rate applicable to a part of the distance only with the individual rate applicable to the remainder. P. 206.
3. The through individual rate, in such case, *held* the "regular tariff rate," within the meaning of a contract between the carrier and the United States for the transportation of soldiers. P. 207.

55 Ct. Clms. 528, reversed.

APPEAL from a judgment of the Court of Claims rejecting the claim of a railroad company for balances due for transportation of soldiers for the United States. The facts are stated in the opinion.

Mr. Alexander Britton and *Mr. Gardiner Lathrop* for appellant.

Mr. Frank Davis, Jr., Special Assistant to the Attorney General, for the United States.

Mr. JUSTICE VAN DEVANTER delivered the opinion of the court.

On several occasions in 1914 and 1915 the railway company at the request of the United States furnished

transportation from one State to another for officers and enlisted men in the United States Army. In each instance a through individual rate from the initial point to the destination was in force, and also individual rates to and from intermediate points. In no instance was there a through party rate; but in all there was a party rate for a part only of the distance. This situation was shown in schedules regularly filed and posted under the Interstate Commerce Act. In two instances the transportation was furnished under a contract calling for a special reduced rate for the full trip, and in the others it was furnished without any prior contract or special arrangement. Bills for the transportation,—computed in the two instances at the contract rate, and in the others at the through individual rate with appropriate land grant deductions,—were presented to the accounting officers, who allowed a part of what was claimed in each bill and disallowed the balance. The company then brought this suit in the Court of Claims to recover the part disallowed and the court, without opinion, sustained the action of the accounting officers.

As to the transportation furnished without a prior contract or special arrangement the accounting officers proceeded on the theory that the collectible rate should be determined by combining the party rate covering a part only of the distance and the individual rate for the remainder and then making any necessary land grant deductions, and not by taking the through individual rate, less any deductions, arising from land grants, as claimed by the company. In this we think the accounting officers erred. The service requested and rendered was a through service. The only rate applicable to a like service for others was the through individual rate. By requesting and accepting the service without some special arrangement for a different rate the United States assented to and became obligated to pay that rate. Under a provision

in the Interstate Commerce Act the United States could have arranged with the company for a different and reduced rate, if the company was so disposed (c. 382, § 22, 25 Stat. 862); but that was not done. In the absence of such an arrangement, the company's duty to the United States was merely that of serving it at rates no higher than those applied to individuals for like transportation, c. 278, § 5, 14 Stat. 295, less any lawful land grant deduction. No individual could require that the party rate covering a part only of the distance and the individual rate for the remainder be taken as the through rate, or as the lawful rate for a through service. Neither could the United States do so in the absence of some prior arrangement to that effect. The situation as respects individuals is aptly stated in Conference Ruling No. 268 of the Interstate Commerce Commission, which is as follows:

"The tariffs of certain carriers provide a 10-party fare from A to B, but no such fare from B to C. Upon inquiry whether it would be legal to ticket a party of 10 from A to C on the basis of the party fare from A to B and the individual fares from B to C when such combination makes less than the joint through individual fare from A to C: Held, That while a party of 10 acting on their own initiative would have the right to use the party fare from A to B and to purchase such transportation as is available from B to C, the carriers may not ticket them through from A to C on such a combination and thus defeat their own published through fare."

The contract under which some of the transportation was furnished called for a rate of $12.80 per man for the full trip, unless that rate should be found to be in excess of the "regular tariff rate," less land grant deductions, in which event the "lower rate" was to govern. The accounting officers proceeded on the theory that the regular tariff rate was to be determined by combining the party rate covering a part only of the distance and the individual

rate for the remainder; and, finding that the rate so constructed, less a land grant deduction, was lower than the contract rate, they rejected the latter and gave effect to the new rate which they had constructed. They proceeded on a mistaken theory. The through individual rate was the only regular tariff rate which was applicable. It, less any land grant deduction, should have been compared with the contract rate ($12.80), and whichever was lower should have been treated as controlling.

The findings relating to the transportation under the contract do not show what the through individual rate was, and therefore the suit cannot be finally determined here.

The judgment is accordingly reversed and the suit is remanded to the Court of Claims with directions to reexamine the company's claim and award a judgment conforming to the views herein expressed.

Judgment reversed.

FREY & SON, INCORPORATED, *v.* CUDAHY PACKING COMPANY.

ERROR TO THE CIRCUIT COURT OF APPEALS FOR THE FOURTH CIRCUIT.

No. 200. Argued March 16, 1921.—Decided April 18, 1921.

1. When the Circuit Court of Appeals reverses a judgment of the District Court in an action at law, and the defeated party brings the case here by waiving his right to new trial and consenting to entry of final judgment against him in the Circuit Court of Appeals, this court must affirm if error necessitating reversal was assigned and relied upon in that court even though the ground of the decision was different and untenable. P. 210. *Thomsen* v. *Cayser*, 243 U. S. 66.

2. An agreement between manufacturer, jobbers and wholesalers to maintain resale prices, need not be formal to violate the Sherman Act, but may be implied from a course of dealing or other circumstances. P. 210. *United States* v. *Schrader's Son, Inc.*, 252 U.S. 85.
3. But the mere facts that a manufacturer indicated a sales plan to wholesalers and jobbers fixing prices below which they were not to sell to retailers, and called this feature very often to their attention, and that most of them did not dissent but coöperated by selling at the prices named, do not suffice to establish an agreement or combination forbidden by the Sherman Act. P. 211.

261 Fed. Rep. 65, affirmed.

ERROR to review a judgment of the Circuit Court of Appeals reversing a judgment obtained by the present plaintiff in error in an action for triple damages under the Sherman Act in the District Court. The facts are stated in the opinion.

Mr. Horace T. Smith and *Mr. Charles Markell* for plaintiff in error.

Mr. Gilbert H. Montague, with whom *Mr. Thomas Creigh* and *Mr. Joseph W. Goodwin* were on the brief, for defendant in error.

MR. JUSTICE MCREYNOLDS delivered the opinion of the court.

Alleging the existence of an unlawful contract, combination or conspiracy between the Packing Company, manufacturer of "Old Dutch Cleanser," and various jobbers for the maintenance of resale prices, and relying upon the Sherman Act (c. 647, 26 Stat. 209) as interpreted in *Dr. Miles Medical Co.* v. *Park & Sons Co.*, 220 U. S. 373, Frey & Son, Inc., instituted this action in the District Court of the United States for Maryland to recover threefold damages. Under an elaborate charge the issues were submitted to the jury for determination. Judgment for

$2,139.00 entered (June 22, 1917) upon a verdict for plaintiff was reversed by the Circuit Court of Appeals July 16, 1919 (261 Fed. Rep. 65)—after decision of *United States* v. *Colgate & Co.* (June 2, 1919), 250 U. S. 300, and before *United States* v. *Schrader's Son, Inc.*, 252 U. S. 85. Plaintiff in error reserved its right of review here, waived a new trial and consented to entry of final judgment for the Packing Company. *Thomsen* v. *Cayser*, 243 U. S. 66.

The court below concluded "There was no formal written or oral agreement with jobbers for the maintenance of prices," and that considering the doctrine approved in *United States* v. *Colgate & Co.* the District Court should have directed a verdict for the defendant. Other errors by the trial court were assigned and relied upon. If any of them was well taken we must affirm the final judgment entered after waiver of new trial and upon consent as above shown.

It is unnecessary to repeat what we said in *United States* v. *Colgate & Co.* and *United States* v. *Schrader's Son, Inc.* Apparently the former case was misapprehended. The latter opinion distinctly stated that the essential agreement, combination or conspiracy might be implied from a course of dealing or other circumstances. Having regard to the course of dealing and all the pertinent facts disclosed by the present record, we think whether there existed an unlawful combination or agreement between the manufacturer and jobbers was a question for the jury to decide, and that the Circuit Court of Appeals erred when it held otherwise.

Among other things the trial court charged:

"I can only say to you that if you shall find that the defendant indicated a sales plan to the wholesalers and jobbers, which plan fixed the price below which the wholesalers and jobbers were not to sell to retailers, and you find defendant called this particular feature of this plan

to their attention on very many different occasions, and you find the great majority of them not only expressing no dissent from such plan, but actually coöperating in carrying it out by themselves selling at the prices named, you may reasonably find from such fact that there was an agreement or combination forbidden by the Sherman Anti-Trust Act."

The recited facts, standing alone, (there were other pregnant ones) did not suffice to establish an agreement or combination forbidden by the Sherman Act. This we pointed out in *United States* v. *Colgate & Co.* As given the instruction was erroneous and material.

The judgment below must be

Affirmed.

MR. JUSTICE PITNEY, with whom concurred MR. JUSTICE DAY and MR. JUSTICE CLARKE, dissenting:

I am constrained to dissent from the opinion and judgment of the court. The action was brought by plaintiff in error, in part to recover threefold damages under § 7 of the Sherman Anti-Trust Act of July 2, 1890, c. 647, 26 Stat. 209, 210, because of injuries sustained in its business by reason of an alleged combination or agreement for the maintenance of prices made between the Packing Company and various wholesalers and jobbers in its product known as "Old Dutch Cleanser." The declaration contained a second count, based upon alleged discrimination in violation of the Clayton Act of October 15, 1914, c. 323, §§ 2, 4, 38 Stat. 730, 731; but this calls for no special notice. A judgment rendered by the United States District Court upon the verdict of a jury in favor of plaintiff was reversed by the Circuit Court of Appeals (261 Fed. Rep. 65) upon the ground that the acts of defendant and its associates amounted to no more than an announcement in advance that customers were expected

to charge prices fixed by defendant upon penalty of refusal to sell to an offending customer, observance of the request by customers generally, and actual enforcement of the penalty by refusing to sell to such customers as failed to maintain the price; and hence that under the decision of this court in *United States* v. *Colgate & Co.*, 250 U. S. 300, there was no ground of recovery under the Anti-Trust Act.

I agree with the court that the Circuit Court of Appeals misapprehended the effect of our decision in the case cited, and that under rules laid down in *Dr. Miles Medical Co.* v. *Park & Sons Co.*, 220 U. S. 373, 399–400, 408; and *United States* v. *Schrader's Son, Inc.*, 252 U. S. 85, 99, the trial judge was right in submitting the case to the jury.

Notwithstanding its conclusion that the Court of Appeals erred in holding that a verdict ought to have been directed in favor of defendant, the majority holds that the judgment under review here ought to be affirmed, because of supposed error in an instruction given to the jury (a new trial having been waived by plaintiff on consenting to entry of final judgment for the Packing Company by the Circuit Court of Appeals under the practice followed in *Thomsen* v. *Cayser*, 243 U. S. 66, 83).

The instruction to which error is attributed related to the question whether a combination between defendant and the wholesalers and jobbers for the purpose of maintaining resale prices had in fact been shown. After referring to the method pursued by defendant in marketing "Old Dutch Cleanser," and stating that under the law defendant could not be held liable under the first count unless it was a party to a contract or combination or conspiracy to fix and maintain prices; that defendant denied it was a party to any such combination, contract, or conspiracy, and insisted it had merely notified the jobbing trade what prices it thought were the lowest at which jobbers would resell its product at sufficient return

to make it worth their while to push the sale of such product; that plaintiff admitted that, with reference to most of the jobbers at least, there was no written and signed agreement on the subject, and none couched in any formal or express terms; but that defendant from time to time had issued circulars to the trade urging the importance of maintaining "uniform and fair jobbing and retail prices and trading provisions" and stating that "any sales by jobbers at special prices would . . . demoralize prices and disturb the entire business in these products," and that "uniformity and equality, as to terms, delivery and price is essential. It is therefore required of our distributing agents that they fully coöperate with us in this direction, as per terms, conditions and prices laid down in our published General Sales List;" and that upon bills sent to wholesalers by defendant there was stamped a notice that "All your quotations, bids, sales and invoices for Old Dutch Cleanser either to jobbers, semi-jobbers, retailers or consumers, should be at a rate not lower than laid down in our published General Sales List;" the trial judge proceeded, as to the particular question whether in fact there was a combination, to speak thus: "I can only say to you that if you shall find that the defendant indicated a sales plan to the wholesalers and jobbers, which plan fixed the price below which the wholesalers and jobbers were not to sell to retailers, and you find defendant called this particular feature of this plan to their attention on very many different occasions, and you find the great majority of them not only expressing no dissent from such plan, but actually coöperating in carrying it out by themselves selling at the prices named, you may reasonably find from such fact that there was an agreement or combination forbidden by the Sherman Anti-Trust Act."

Passing for the moment the question whether this was legally erroneous, I am unable to find in the record any

basis for attributing error to the trial judge in respect to it, because it was not made the subject of any proper exception. The trial was litigiously contested, defendant having taken no less than 157 exceptions, of which 20 were directed to the charge given to the jury. Among them, however, I can find none that challenges the proposition embodied in the instruction now held to be erroneous, recites either the words or the substance of that instruction, or otherwise fairly identifies it so as to bring it to the attention of the trial judge. Defendant relies upon an exception which reads as follows: "I also respectfully except to so much of your Honor's charge as indicates that an unlawful contract and combination or conspiracy or understanding is shown where it appears that in the absence of an express obligation some dealer, responding to a suggestion from Cudahy Packing Company, may have sold at the prices mentioned in its literature." To which the judge responded: "All a question of fact for the jury. All I can say on such questions is that the jury, when they come into this jury box, I do not suppose, leave their common sense behind."

There is nothing here to show that the attention of the trial judge either was or ought to have been directed to that part of his charge now held to be erroneous. The exception alleged did not even faintly or approximately express the tenor and effect of that instruction or of any other that was given to the jury; much less did it fairly and distinctly raise a question of law upon this or any other point in the charge.

It is elementary that, in order to lay foundation to review by writ of error the proceedings of the courts of the United States in the trial of common-law actions, the questions of law proposed to be reviewed must be raised by specific, precise, direct, and unambiguous objections, so taken as clearly to afford to the trial judge an opportunity for revising his rulings; and that a bill of exceptions not

fulfilling this test will furnish no support for an assignment of error. To quote from some of the decisions: "One object of an exception is to call the attention of the circuit judge to the precise point as to which it is supposed he has erred, that he may then and there consider it, and give new and different instructions to the jury, if in his judgment it should be proper to do so." *Beaver* v. *Taylor*, 93 U. S. 46, 55. "While it is the duty of this court to review the action of subordinate courts, justice to those courts requires that their alleged errors should be called directly to their attention, and that their action should not be reversed upon questions which the astuteness of counsel in this court has evolved from the record. It is not the province of this court to retry these cases *de novo*." *Robinson & Co.* v. *Belt*, 187 U. S. 41, 50. "It has been too frequently held to require the extended citation of cases that an exception of this general character will not cover specific objections, which in fairness to the court ought to have been called to its attention, in order that if necessary, it could correct or modify them. . . . In such cases it is the duty of the objecting party to point out specifically the part of the instructions regarded as erroneous." *McDermott* v. *Severe*, 202 U. S. 600, 610. "The primary and essential function of an exception is to direct the mind of the trial judge to a single and precise point in which it is supposed that he has erred in law, so that he may reconsider it and change his ruling if convinced of error, and that injustice and mistrials due to inadvertent errors may thus be obviated. An exception, therefore, furnishes no basis for reversal upon any ground other than the one specifically called to the attention of the trial court." *United States* v. *United States Fidelity & Guaranty Co.*, 236 U. S. 512, 529. See, also, *Guerini Stone Co.* v. *Carlin Construction Co.*, 248 U. S. 334, 348; *Fillippon* v. *Albion Vein Slate Co.*, 250 U. S. 76, 82.

Not only the trial judge, but the opposing party has

rights that one who objects to the course of the proceedings is bound to respect, if he seeks a review by writ of error. To permit the result of a trial to be set at naught because of an objection that has no proper relation to any ruling made unless it be taken in a sense entirely variant from the language expressed by objecting counsel, would render the fair and orderly conduct of a trial impossible and place a premium upon ambiguity and even trickery. Upon the present record, it would be most unjust to the plaintiff, as well as to the trial judge, to call upon the latter, wearied as he must have been in the course of such a trial, to recognize in the one hundred and fifty-fourth objection a challenge of the legal accuracy of an instruction that he had expressed in language so very different.

But, were the instruction duly excepted to, I am unable to assent to the view that it was erroneous. The jury were not told that from the facts recited, if believed, an agreement or combination forbidden by the act of Congress necessarily resulted, but only that from those facts, together with other and undisputed facts that were in evidence, they reasonably might find there was such an agreement or combination. It is settled beyond controversy that an agreement in order to be a violation of the act need not be expressed, but may be "implied from a course of dealing or other circumstances" (*United States* v. *Schrader's Sons, Inc.*, 252 U. S. 85, 99). And, while naturally it influences the action of the participants, it of course need not be such as to control them in a legal sense. From the very fact that it is a violation of the law it cannot be legally binding; and it is only as a *de facto* agreement, or understanding, or combination, that the conspiracy in restraint of trade need control the conduct of the participants in order that it may constitute a violation of the act.

Reading the criticized instruction in the light of the other parts of the charge, it amounted to no more than

telling the jury that if defendant had a sales plan that, if assented to and carried into effect, would constitute a fixing of prices in restraint of interstate trade and commerce, and the particulars of this plan were repeatedly communicated by defendant to the many wholesalers and jobbers with whom it had relations, and if the great majority of them not only did not express dissent from the plan but actually coöperated in carrying it out by themselves adhering to its details; the jury reasonably might infer that they did mutually give assent to the plan, equivalent to an agreement or combination to pursue it. In short, that upon finding many persons, actuated by a common motive, exchanging communications between themselves respecting a plan of conduct and acting in concert in precise accordance with the plan, the jury might find that they had agreed or combined to act as in fact they did act; that their simultaneous pursuit of an identical programme was not a miraculous coincidence, but was the result of an agreement or combination to act together for a common end.

The opinion states no ground upon which the instruction is held to be erroneous; the elaborate brief submitted in behalf of the Packing Company specifies no criticism upon it; and I am unable to discern adequate reason for condemning it. It suggested a perfectly natural and legitimate inference that might be drawn by the jury from the facts in evidence; having included in the recital the very same facts and circumstances, indeed, upon which this court now unanimously holds that the case was for the jury. Concerted action is of the essence of a conspiracy (*Pettibone* v. *United States*, 148 U. S. 197, 203); and it is "hornbook law" that where concerted action is found to exist following an interchange of communication between the actors, it gives ground for a reasonable inference of an agreement to act in concert. Just as the mechanism of a watch affords evidence of a design, and

hence of a designer; so a systematic course of action, pursued at one and the same time by many persons and affecting their mutual interests, raises a fair inference of an agreement between them to pursue that course of action. Juries in conspiracy cases are instructed to this effect every day, without disapproval; and it seems to me the permitted inference is in accord with common sense and the ordinary rules by which men's motives and secret understandings are judged from their acts.

I find nothing in the *Colgate & Co.* decision to support a criticism of the judge's instruction. There the indictment, under the interpretation adopted by the trial court and necessarily accepted by us, failed to charge the making of any agreement, either express or implied, that imported an obligation to observe specified resale prices. This was the very ground of our decision, as was pointed out in the case of *Schrader's Son, Inc.*, 252 U. S. 99. Here the state of the evidence, as this entire court now holds, required the trial court to submit to the jury the question of fact whether an agreement to observe the specified resale prices was to be inferred from the course of dealing and other circumstances. The trial judge fairly summarized the pertinent facts and circumstances disclosed by the record regarding the course of dealing between the parties, from which the alleged agreement, combination, or conspiracy in restraint or trade might or might not be inferred, and then, in the clause now criticized, submitted to the jury the question of fact whether one should be inferred. I am unable to see in what respect he failed to conform to correct practice and the decisions of this court; or how, if his instruction was erroneous, a trial judge can correctly submit to a jury the question whether, from a course of dealing and other circumstances, an agreement to fix prices in restraint of trade shall be found.

The circumstances from which the trial judge permitted an inference of conspiracy to be drawn seem to me stronger

than those held sufficient by this court in *Thomsen* v. *Cayser*, 243 U. S. 66, 84, where there was no direct proof of the terms of any conference or agreement participated in by the defendants, and the principal evidence consisted of circulars issued and a concerted course of dealing under which certain steamship owners operated their vessels in the trade from New York to South African ports without competing with one another; upon the strength of which the court rejected the suggestion that the circulars and the concerted course of dealing under them were accidental and without premeditation followed by unity in execution. So in *Eastern States Retail Lumber Dealers' Association* v. *United States*, 234 U. S. 600, 607–609, 612, there was no express agreement among the retailers to refrain from dealing with the listed wholesalers, nor any penalty for failing to do so. But the court found, in the systematic and periodical circulation of certain confidential information, commonly called black-lists, intended to guide the action of the recipients and cause them to withhold patronage from the listed concerns, sufficient evidence of a conspiracy in restraint of trade; saying, p. 612: "It is said that in order to show a combination or conspiracy within the Sherman Act some agreement must be shown under which the concerted action is taken. It is elementary, however, that conspiracies are seldom capable of proof by direct testimony and may be inferred from the things actually done, and when in this case by concerted action the names of wholesalers who were reported as having made sales to consumers were periodically reported to the other members of the associations, the conspiracy to accomplish that which was the natural consequence of such action may be readily inferred." Here the character of the communications was different; but as evidence, when taken in connection with the concerted action that followed, they have the same tendency to show a conspiracy.

Authorities easily might be multipled, but it is unnecessary. Convinced that the ruling now made, if adhered to, will seriously hamper the courts of the United States in carrying into effect the prohibition of Congress against combinations in restraint of interstate trade, I respectfully dissent from the opinion and judgment of the court.

MR. JUSTICE DAY and MR. JUSTICE CLARKE concur in this dissent.

STATE OF NORTH DAKOTA *v.* STATE OF MINNESOTA.

IN EQUITY.

No. 14, Original Argued January 3, 4, 1921.—Order entered April 18, 1921.

Order restoring the case to the docket, directing the taking of supplemental proofs and suggesting the consolidation of this cause with another between the States of South Dakota and Minnesota.

Mr. M. H. Boutelle, with whom *Mr. William Langer*, Attorney General of the State of North Dakota, *Mr. John Lind*, and *Mr. I. C. Pinkney* were on brief, for complainant.

Mr. John E. Palmer and *Mr. Egbert S. Oakley*, with whom *Mr. Clifford L. Hilton*, Attorney General of the State of Minnesota, and *Mr. Montreville J. Brown* were on the brief, for defendant.

ORDER. To afford an opportunity for the taking of supplemental proof deemed by the court necessary to an adequate consideration and disposition of the cause,

it is ordered that the case be restored to the docket to the end that the parties may proceed promptly to take the testimony of not exceeding three engineering experts on each side as to the possibility, within the limits of a reasonable expenditure, of doing away with or ameliorating the flood conditions along the Bois de Sioux River by means other than the injunction prayed for in the bill herein, the testimony thus to be taken to be particularly directed, among other things, to the possibility and effect and estimated cost of any of the following projects: (a) the construction of detaining basins for drainage water throughout the watershed of the Mustinka River for the purpose of withholding a part of the spring waters until the flood period is past; (b) the construction of a sluice dam at any point in Lake Traverse for the purpose of increasing its capacity as a detaining basin; (c) artificial improvement in the channel of the Bois de Sioux River in order to improve its capacity as an outlet for the waters of Lake Traverse in times of flood, so as to prevent overflow and the inundation of the Bois de Sioux valley, the works to include a sluice dam at the foot of Lake Traverse if necessary in order to maintain its level in times of normal flow; (d) lowering the level of Lake Traverse by means of an outlet to Big Stone Lake, controlled by a sluice dam, with a view to increasing its capacity as a detaining basin during the flood period; (e) by diverting some of the drainage water from the so-called Delta Zone, in order to discharge the same down the Mustinka River, to the Rabbit River.

It is further ordered that the parties may take the testimony of not exceeding three witnesses on each side concerning the proper equitable basis for apportioning the expense of any feasible project among the States drained by the Lake Traverse—Bois de Sioux watershed, taking into account, among other considerations, the amount of water discharged by each State into Lake

Traverse or the Bois de Sioux River and the benefit conferred by the improvement.

It is further ordered that testimony shall be taken sufficient to advise the Court as to the flood conditions which have prevailed, since the filing of the bill herein, in the area claimed to have been flooded by the action of the State of Minnesota.

Before the taking of the testimony on the subject above referred to and the resubmission of the cause the Court will entertain a motion in this case and the case of *The State of South Dakota* v. *The State of Minnesota*, No. 15, Original, to consolidate that case with this if counsel are so advised, to the end that the possibility may be considered of alleviating flood conditions in Lake Traverse and along the Bois de Sioux River by other means than the injunction prayed for in that case and to permit South Dakota to take testimony at the hearing now ordered in this case.

NICKEL ET AL., AS TRUSTEES, &c., ET AL. *v.* COLE, AS STATE CONTROLLER OF THE STATE OF NEVADA.

NICKEL ET AL., AS TRUSTEES, &c., ET AL. *v.* STATE OF NEVADA.

ERROR TO THE SUPREME COURT OF THE STATE OF NEVADA.

Nos. 268, 269. Argued March 24, 1921.—Decided April 25, 1921.

1. Remainder interests which vested after a state transfer tax law was approved but before the time when, as construed by the state Supreme Court, it became effective, but which nevertheless were

subjected to it by that court upon the theory that the vesting actually occurred after it became effective, are not to be regarded as taxed thereby in violation of the Fourteenth Amendment, (even assuming that such a tax may not be laid retroactively), since the law might have been made applicable before the interests vested. P. 224.

2. A decision of a state court made upon grounds having no relation to any federal question and without purpose to evade a federal issue, will be accepted by this court, whether right or wrong, when the case comes here for review. P. 225.

43 Nevada, 12, affirmed; petition for writ of certiorari denied.

ERROR to review judgments of the Supreme Court of Nevada sustaining taxes laid under the state transfer tax act upon remainder interests claimed to have vested before the effective date of the statute. The facts are stated in the opinion.

Mr. Edward F. Treadwell, with whom *Mr. Azro E. Cheney* was on the brief, for plaintiffs in error.

Mr. Leonard B. Fowler, Attorney General of the State of Nevada, with whom *Mr. Robert Richards* and *Mr. Wm. C. Prentiss* were on the brief, for defendants in error.

Mr. Garret W. McEnerney, by leave of court, filed a brief as *amicus curiæ*.

MR. JUSTICE HOLMES delivered the opinion of the court.

The first of these suits was brought by the Controller of Nevada to collect a transfer tax alleged to be due under a statute of Nevada approved on March 26, 1913, to take effect thirty days from that date. Nevada Stats. of 1913, c. 266, p. 411. The second suit was brought to quiet title to the shares of stock in respect of which the tax was assessed—to establish that there was no lien upon or claim against them for the tax. The two cases were

heard together in the state courts and here upon the same facts. The Supreme Court of Nevada held that the tax was due and decided in favor of the State. The parties on the other side had set up and claimed immunity under the Constitution of the United States, especially the Fourteenth Amendment, and brought the cases here by writ of error. By way of caution they also filed a petition for certiorari which has not yet been passed upon by this Court.

The facts are these: Henry Miller, a resident of California, was the owner of 119,875.75 shares of the stock of Miller & Lux, Incorporated, a Nevada corporation. Miller & Lux, Inc., owned the stock of the Pacific Live Stock Company, a California corporation, and the latter owned real estate and personal property in Nevada appraised at $1,431,326.86. On April 17, 1913, after the above mentioned statute had been passed but before it went into operation, Miller in California made a will, and at the same time a deed of trust conveying his stock to the plaintiffs in error, in trust for himself for life and after his death upon limitations similar to those in his will—any payment under the will to be in satisfaction of the provisions both in the will and in the deed. The deed contained no power of revocation. The stock was endorsed and delivered to the trustees and thereafter was retained by them. Miller died on October 14, 1916. The statute imposes a tax upon the transfer of all property which shall pass in trust or otherwise by will or by statutes of inheritance or by deed or gift made without valuable and adequate consideration in contemplation of the death of the grantor or donor, or to take effect in possession or enjoyment at or after such death.

The plaintiffs in error admit that if the statute had been in operation at the time of the transfer the tax would have been due, so that it is not necessary to go into further particulars about the act. But they say that the

interest of the remaindermen after the death of Miller vested upon the execution of the deed and that therefore the statute did not apply to them, and could not do so consistently with the Constitution of the United States.

We shall not discuss the postulate of the argument for the plaintiffs in error—the notion that a tax upon transfers imposed by a statute passed after the transfers had taken place would be void. In this case the statute was passed before the date of the deed of trust and therefore undeniably could have been drawn so as to tax the transaction. Reading as it did it possibly might have been construed as doing so, notwithstanding the postponement of the date for its going into operation, and so construed would have been good as against constitutional objections.

But the plaintiffs in error say that what we pronounce possible is not what the Supreme Court of Nevada did. The Supreme Court of Nevada seems to have conceded that if the interest of those who took upon Miller's death was vested when the deed was delivered the statute did not and perhaps could not apply. They reached the result by holding that the execution of the deed and will was one transaction and gave no vested right until Miller's death. Thereupon the plaintiffs in error say that the above limitation to the statute being admitted the State Court could not avoid the supposed constitutional difficulty by assuming a view of the instrument that is deemed to be plainly untenable, as held by the Chief Justice dissenting, and contrary to the law of California where the parties lived and the transfer was made. *Nickel* v. *State*, 179 California, 126. But the answer to this is that when as here there can be no pretence that the Court adopted its view in order to evade a constitutional issue, and the case has been decided upon grounds that have no relation to any federal question, this Court accepts the decision whether right or wrong. *Enterprise*

Irrigation District v. *Farmers Mutual Canal Co.*, 243 U. S. 157, 164. And when, as here, the statute unquestionably might have made the tax applicable to this transfer, we do not inquire very curiously into the reasoning by which the statute is held to justify the tax. "As there was state power to tax . . . the question whether or not the interest [of the plaintiffs in error] under the circumstances was correctly subjected to the tax was a purely state question." *Moffitt* v. *Kelly*, 218 U. S. 400, 405. The plaintiffs in error contend that this Court is "concerned . . . solely with the effect and operation of the law as put in force by the State." *Corn Products Refining Co.* v. *Eddy*, 249 U. S. 427, 432. The operation of the law if construed to cover this case infringes no constitutional rights.

Judgments affirmed.
Writs of Certiorari denied.

MR. JUSTICE MCKENNA dissents.

MR. JUSTICE CLARKE took no part in the decision of this case.

ST. LOUIS-SAN FRANCISCO RAILWAY COMPANY *v.* MIDDLEKAMP, STATE TREASURER OF THE STATE OF MISSOURI, ET AL.

APPEAL FROM THE DISTRICT COURT OF THE UNITED STATES FOR THE WESTERN DISTRICT OF MISSOURI.

No. 636. Argued March 2, 3, 1921.—Decided May 2, 1921.

1. The question whether the Missouri law laying on corporations an annual franchise tax of a percentage of their capital stock and surplus employed in the State (Laws 1917, pp. 237-242) lacks

due process, in not providing a hearing, of right, before the commission that assesses the tax, is presumably open in the suit provided for collecting the tax, and therefore cannot be relied on in a suit in the District Court to restrain collection brought by a corporation which had a hearing and whose valuations were accepted by the commission in making the assessment. P. 229.

2. Its own figures having been so accepted, the corporation can not complain that it was taxed disproportionately as compared with other railroads, the commission not having acted fraudulently. P. 230.
3. The Missouri law, as this court understands it to have been construed by the Supreme Court of the State, subjects foreign corporations with stock having no stated par value to the tax; it, therefore, does not discriminate against domestic corporations whose stock has a stated par value. P. 230.
4. The tax does not contravene the Commerce Clause, even if the value of the franchise taxed is derived partly from the fact that the corporation does interstate business. P. 231.
5. Federal control of its railroad during the tax year did not exonerate the plaintiff railroad company from the tax. P. 231.
6. The act does not violate the constitution of Missouri by imposing double taxation. P. 231.
7. The "surplus" is the excess in value of the assets in the State (where the corporation employs part of its "capital stock" in business elsewhere) over the capital stock employed in the State. P. 231.
8. While, in respect of such corporations, the statute in one clause describes the tax as measured by the capital stock employed in the State, other connected clauses show the intention to include the surplus so employed, as well. P. 231.

Affirmed.

APPEAL from a decree of the District Court sustaining a franchise tax imposed on a Missouri railroad corporation, which sought to enjoin its collection. The facts are given in the opinion.

Mr. Edward T. Miller and *Mr. Henry S. Conrad*, with whom *Mr. William F. Evans* was on the briefs, for appellant.

Mr. Frank W. McAllister, with whom *Mr. Jesse W. Barrett*, Attorney General of the State of Missouri, and *Mr. Merrill E. Otis* were on the briefs, for appellees.

Mr. Thomas O. Stokes, *Mr. D. A. Frank*, *Mr. J. W. Gleed* and *Mr. S. L. Swarts*, by leave of court, filed a brief as *amici curiæ*.

MR. JUSTICE HOLMES delivered the opinion of the court.

This is a bill to restrain the collection of a franchise tax imposed by the statutes of Missouri upon domestic corporations. Laws of 1917, pp. 237–242.[1] The plaintiff, a corporation of Missouri, filed with the State Tax Com-

[1] Section 1. Every corporation organized under the laws of this state shall, in addition to all other fees and taxes now required or paid, pay an annual franchise tax to the state of Missouri equal to three-fortieths of one per cent of the par value of its outstanding capital stock and surplus, or if such corporation employs a part of its capital stock in business in another state or country, then such corporation shall pay an annual franchise tax equal to three-fortieths of one per cent of its capital stock employed in this state, and for the purposes of this act such corporation shall be deemed to have employed in this state that proportion of its entire outstanding capital stock and surplus that its property and assets in this state bears to all its property and assets wherever located. Every corporation, not organized under the laws of this state, and engaged in business in this state, shall pay an annual franchise tax to the state of Missouri equal to three-fortieths of one per cent of the par value of its capital stock and surplus employed in business in this state, and for the purposes of this act such corporation shall be deemed to have employed in this state that proportion of its entire capital stock and surplus that its property and assets in this state bears to all its property and assets wherever located; *provided*, that this act shall not apply to corporations not organized for profit, nor to express companies, which now pay an annual tax on their gross receipts in this state; and insurance companies, which pay an annual tax on their gross premium receipts in this state.

mission a report, as required by law, showing the value of its assets within the State to be $122,826,652, and the amount of its stock employed within the State $21,625,830. The State Tax Commission accepted these figures and following the statute levied a tax measured by 3/40 of one per cent. of the capital stock employed within the State, and also the same tax in respect of the excess in value of the assets within the State over that of such stock, treating that as the "surplus" which the statute takes as the measure along with the stock. The result of course was a tax of 3/40 of one per cent. upon $122,826,652, equal to $92,119.99. The plaintiff contests the constitutionality of the act under the Fourteenth Amendment and the Commerce Clause (Art. I, § 8), and under a supposed prohibition of double taxation in the constitution of Missouri. It also contends that if the act was valid it was misconstrued in the ascertainment of the surplus over the value of the capital stock in the State. A preliminary injunction was denied by three judges sitting in the District Court and the plaintiff appealed.

The objection most insisted upon in this Court was that the statute made no provision for a hearing, and that although the plaintiff applied to the Tax Commission for a hearing and had one, the statute was bad because it did not provide one in terms. *Central of Georgia Ry. Co.* v. *Wright*, 207 U. S. 127, 138. The mode of collecting the tax is by a suit where, of course, the present plaintiff would be heard, but it is said that the judgment of the Commission can be attacked only for want of jurisdiction and fraud. We cannot suppose however that any question of law apparent on the face of the record would not be open. The constitutional objection mainly relied upon necessarily would be. And as in this case the Commission accepted the plaintiff's figures and the contest is wholly upon matters of law, we see nothing of which

the plaintiff can complain in this respect. There is to be sure one charge involving matter of fact dehors the record. It is alleged that the plaintiff was taxed disproportionately as compared with other railroads. But the plaintiff was taxed upon its own figures in accordance with the statute and could not complain of that. If it had made out a case of fraud against the Commission we presume that the State Courts would have been open to it, as well as the District Court of the United States. But nothing of that kind was proved. *Sunday Lake Iron Co.* v. *Wakefield*, 247 U. S. 350, 353.

The next objection to the tax has assumed greater importance than any other because it induced the same judges who sat in this case to change their opinion and issue a temporary injunction in a suit like this brought by the Southwestern Bell Telephone Company. We will consider it although it hardly is open on the bill. It now has been decided by the Supreme Court of Missouri that corporations with stock having no stated par value can be admitted to do business in the State, *State ex rel. Standard Tank Car Co.* v. *Sullivan*, 282 Missouri, 261, and that decision was taken to mean that all such corporations fall within a provision imposing a tax of only twenty-five dollars upon foreign corporations without a capital stock. On that ground it was held that the Southwestern Bell Telephone Company was denied the equal protection of the laws. We hesitate to differ from judges presumably familiar with local conditions, but we cannot read the careful discussion by the Missouri Court as having the meaning supposed. It is true that it adverts to the "lump annual tax" imposed upon foreign corporations without a capital stock while arguing that the policy and laws of Missouri do not forbid their entering the State. But at a later page it quotes with approval a Kansas case to show not only that the absence of a stated value for the stock would create no difficulty

in determining whether a corporation should be admitted but also that it would create equally little difficulty in applying the tax imposed upon corporations with stock having a stated par. Until the Supreme Court of the State decides otherwise we shall assume that the supposed inequality of treatment does not exist.

There is no contravention of the Commerce Clause. It is said that the value of the franchise taxed is derived partly from the fact that the corporation does interstate business, but that does not invalidate the tax. *St. Louis & East St. Louis Electric Ry. Co.* v. *Hagerman, post,* 314. *St. Louis Southwestern Ry. Co.* v. *Arkansas,* 235 U. S. 350, 365. Of course the fact that the plaintiff's road was under federal control during the year in question does not exonerate it. It was profiting by its franchises although in a different way. Act of March 21, 1918, c. 25, §§ 1, 15, 40 Stat. 451, 458.

Nothing more needs to be said concerning the relation of the act to the Constitution of the United States. As to the constitution of Missouri we see no reason to believe that it has been violated and perceive no indication of such an opinion in the judgments of the Supreme Court of the State. That Court on the contrary seems to regard the act as valid. *State ex rel. Marquette Hotel Investment Co.* v. *State Tax Commission,* 282 Missouri, 213. This case also sanctions the construction adopted by the Commission and the Court below for the word "surplus" in the statute and shows that the amount of the tax was right. It is urged that where, as here, only a part of the corporation's capital is employed within the State the tax is measured by that part of the capital alone and no part of the surplus is taken into account. The words are, "such corporation shall pay an annual franchise tax equal to three-fortieths of one per cent of its capital stock employed in this state." But these words follow the words laying the normal tax measured by stock and sur-

plus, and the sentence quoted continues "and for the purposes of this act such corporation shall be deemed to have employed in this state that proportion of its entire outstanding capital stock and surplus that its property and assets in this state bears to all its property and assets wherever located." We cannot much doubt that the tax was intended to be measured by the proportion of stock and surplus in the State, and that the omission of reference to surplus in the clause first quoted is a misprision or abbreviation that does not conceal the purpose to be gathered from the previous and following words. We think it unnecessary to go into further details.

Decree affirmed.

NEWBERRY ET AL. *v.* UNITED STATES.

ERROR TO THE DISTRICT COURT OF THE UNITED STATES FOR THE WESTERN DISTRICT OF MICHIGAN.

No. 559. Argued January 7, 10, 1921.—Decided May 2, 1921.

1. Section 8 of the "Federal Corrupt Practices Act" (June 25, 1910, c. 392, 36 Stat. 822; amended August 19, 1911, c. 33, 37 Stat. 25), which undertakes to limit the amount of money which any candidate for the office of Representative in Congress or of United States Senator shall give, contribute, expend, use, or promise, or cause to be given, contributed, expended, used, or promised, in procuring his nomination or election, is unconstitutional. So *held*, as applied to a primary election of candidates for a seat in the Senate. P. 247.
2. The power of Congress over elections of Senators and Representatives has its source in § 4 of Art. I of the Constitution, which provides: "The times, places and manner of holding elections for Senators and Representatives, shall be prescribed in each State by the Legislature thereof; but the Congress may at any time by law make or alter such regulations, except as to the places of chusing Senators." P. 247.

3. An indefinite, undefined power in Congress over elections of Senators and Representatives, not derived from Art. I, § 4, cannot be inferred from the fact that the offices were created by the Constitution, or by assuming that the Government must be free from any control by the States over matters affecting the choice of its officers,—a false assumption, ignoring powers clearly vested in the States under the Constitution and the federal character of the Government. P. 249.
4. Elections, within the original intendment of § 4 of Art. I, were those wherein Senators should be chosen by legislatures and Representatives by voters possessing "the qualifications requisite for electors of the most numerous branch of the State Legislature." Art. I, §§ 2 and 3. P. 250.
5. The Seventeenth Amendment neither announced nor requires a new meaning of election, and the word now has the same general significance as it did when the Constitution came into existence,—final choice of an officer by the duly qualified electors. P. 250.
6. Primaries are in no sense elections for office, but merely methods by which party adherents agree upon candidates whom they intend to offer and support for ultimate choice by all qualified electors. P. 250.
7. The Seventeenth Amendment does not modify Art. I, § 4, the source of congressional power to regulate the times, places and manner of holding elections; that section remains intact and applicable to the election of both Representatives and Senators. P. 252.
8. The Act of June 4, 1914, c. 103, 38 Stat. 384, providing a temporary method of conducting the nomination and election of Senators, sheds no light on the power of Congress to regulate primaries and conventions. P. 253.
9. Even if the Seventeenth Amendment gave power to regulate primaries for the choice of senatorial candidates, its adoption did not validate the earlier penal statute on the subject (Act of 1910-1911, *supra*, par. 1); an after-acquired power cannot *ex proprio vigore* validate a statute void when enacted. P. 254.
10. Section 2 of the Act of June 4, 1914, *supra*, if it could be regarded as an attempt to regulate nominations of Senators, based on the Amendment, would have no bearing on a prosecution under the Act of 1910-1911, for conduct occurring after that section expired by its own limitation. P. 254.
11. The power to control party primaries for designating candidates for the Senate is not within the grant of power "to regulate the manner of holding elections" (Art. I, § 4),—neither within the

fair intendment of the words used nor the meaning ascribed to them by the framers of the Constitution; it is not necessary in order to effectuate the power expressly granted (Art. I, § 8, cl. 18); and its exercise would interfere with purely domestic affairs of the States and infringe upon liberties reserved to the people. P. 256.

Reversed.

WRIT of error to a conviction and sentence under an indictment charging conspiracy to violate the Federal Corrupt Practices Act. The case is stated in the opinion, *post*, 243.

Mr. Charles E. Hughes, with whom *Mr. James O. Murfin*, *Mr. Martin W. Littleton* and *Mr. George E. Nichols* were on the briefs, for plaintiffs in error:

The statutory provision in question is without constitutional authority. Article I, § 4, of the Constitution, is the only provision of the Constitution which can be invoked in the attempt to find authority for the legislation upon which this prosecution is based. *United States* v. *Gradwell*, 243 U. S. 476, 481, 482. The power thus conferred upon Congress is a limited one, confined to regulations of "the times, places and manner of holding elections."

The qualifications of electors, and of those who might be elected, are defined in other provisions. It is apparent that while Congress should have the power to regulate the times, places and manner of holding elections, it was not intended otherwise to detract from the freedom of the people of the States with respect to their political activities. The conditions with respect to suffrage in the several States, at the time of the adoption of the Constitution, are stated in *Minor* v. *Happersett*, 21 Wall. 162, 172. Each State had determined for itself who should have the right to vote, and, in creating the new government, it was provided, with respect to the choice of members of the House, that "the electors in each State shall have the qualifications requisite for electors

of the most numerous branch of the state legislature" (Art. I, § 2); and with respect to the Senators that they should be "chosen by the legislature" of each State (Art. I, § 3). And when the Seventeenth Amendment was adopted, a provision was made with respect to the qualifications of electors similar to that which obtains in the case of electors of the members of the House.

With these provisions as to qualifications of electors, the measure of control given to Congress was the control of "the times, places and manner of holding elections" with the exception as to "the places of chusing Senators." As to the Senate, the extent of the power was to regulate the "*time*" and "*manner*." The Federalist, No. LX. See, also, Farrand, Records of Federal Convention, vol. 3, pp. 194, 195, 267, 311, 319, 344, 345, 359.

The sole question then is whether the statute is a regulation of the "manner of holding elections."

The "*election*" is the choice of the Senator or Representative, and the "*holding*" of the election is the taking of the vote to determine the choice. The regulation of the "*manner*" of holding elections is manifestly the regulation of the way in which the vote to determine the choice shall be taken and registered.

As Congress has the power to regulate the taking of the vote, Congress has the power to protect the qualified voters in exercising their right to vote at the time when the vote is taken. Congress also has the power to supervise the taking of the vote in order to make sure that the vote is duly taken, and Congress may also prescribe how the vote shall be counted and the result registered. In this power to regulate there would be involved the power to protect the voter in the casting of his vote, to protect the evidence of the vote, to insure freedom from any improper tampering with the vote or with the counting of the vote or with the registration of its result.

Congress is thus authorized to surround the election.

that is, the taking of the vote, with appropriate safeguards and with such adequate supervision as will insure to the voter the free exercise of his right and establish the choice as shown by the vote properly taken and counted. *Ex parte Siebold*, 100 U. S. 371, 396; *Ex parte Yarbrough*, 110 U. S. 651, 661; *United States* v. *Mosley*, 238 U. S. 383; *In re Coy*, 127 U. S. 731, 752.

The history of the action of Congress under the authority conferred by Art. I, § 4, reviewed by Mr. Justice Clarke in *United States* v. *Gradwell*, *supra*, 482–484, is most instructive. A distinction is at once apparent between the regulation of the manner of holding elections, in order to protect the rights of the voter and to secure a fair count, and the attempt to interfere with or control the activities of the people of the States in the conduct of political campaigns. In other words, if we assume the validity of regulations which protect each qualified voter in the exercise of his right to vote and which provide for the supervision of the casting of the vote and the proper ascertainment of the result, then the question is whether Congress can go further and attempt to control the educational campaign. Upon what ground can it be said that Congress can provide how many meetings shall be held, where meetings shall be held, how many speakers shall be allowed to speak for a candidate, how many circulars may be distributed, how many committees may act in behalf of a candidate, how they shall be organized and what shall be the limit of their honest activity?

In the exercise of the power conferred, prior to the legislation now under consideration, Congress always dealt with the election and the conduct of the election, and never with the nominating process.

If it be said that it was not the intention of Congress by this legislation to regulate the "election," but to impose a restriction upon the candidate as an individual, the act nevertheless would be invalid.

The so-called "nominating primary" was unknown at the time of the adoption of the Constitution; it is a development of comparatively recent years. The nominating primary, like the nominating convention and its predecessor, the caucus, is not the "election." The nominating process is distinct from the election, and it was so regarded at the time of the adoption of the Constitution.

What the term "elections" meant at the time of the adoption of the Constitution, it means now. See *Hawke* v. *Smith*, 253 U. S. 221, 227, 228, involving the meaning of the word "legislatures," as used in Article V with respect to the ratification of amendments. The ruling in that case is not at all at variance with the familiar decisions that when a constitutional provision embodies a certain concept, whatever is properly within the concept is embraced within the words of the Constitution, although it lay far beyond the vision of the framers of the Constitution. *In re Debs*, 158 U. S. 564, 591; *Hammer* v. *Dagenhart*, 247 U. S. 251.

No one would have the hardihood to suggest that within the meaning of the framers of the Constitution the word "elections" had reference to anything else than the taking of the vote for Senators or Representatives.

At the time of the adoption of the Constitution, the nomination process was a very simple one. No one could have confused it with an "election." Nominations were early made at the caucus, which was either an informal gathering of the voters of a particular district or a "legislative" or "congressional" caucus. It was not regulated by law and no one regarded it as an "election." Later, the caucus gave way to the nominating convention to which delegates were chosen. But no one supposed that the nominating convention was an "election." It is only recently that nominating conventions have been subject to legal regulation in the States. The introduction of the so-called primary system was simply

another phase of the nominating process. The primary was no more an "*election*," within the meaning of the Constitution, than the nominating convention or the caucus was an "election." It is a mere accidental circumstance that because of the method adopted in the primary there has come into use the expression "primary election." The present use of this term has nothing to do with the meaning of "elections" as used in Art. I, § 4.

In providing that Congress might substitute its regulation for that of the States with reference to the "election" the framers of the Constitution had reference to a very distinct subject of regulation, to-wit, the "election" itself. There had been no attempt to regulate by law the nominating process. There was nothing at the time of the adoption of the Constitution, or for approximately a hundred years after, which savored of an attempt to regulate the political activities of citizens so far as these related to nominations.

It follows then that the Constitution used a term with a well-defined meaning. There is nothing in the knowledge, spirit or conditions of the times which suggests any purpose to widen that term so to embrace that which according to its natural significance it did not embrace. It is inconceivable that, had there been any intention to delegate power to regulate the process of nominations, the framers of the Constitution would have been content to provide for the regulation of the "times, places and manner of holding elections."

We think there is far more to be said for the proposition that the word "legislatures" in Art. V referred to those who legislated whether a representative body or the people themselves than to say that the word "*elections*" in Art. I, § 4, embraces the nominating process.

Even under state constitutions the term "elections" does not embrace so-called "primary elections" when the term refers to the election of public officers.

State v. *Erickson*, 119 Minnesota, 152, 156; *State* v. *Taylor*, 220 Missouri, 618, 631; *Zent* v. *Nichols*, 50 Washington, 508, 522; *Ledgerwood* v. *Pitts*, 122 Tennessee, 570, 587; *State* v. *Woodruff*, 68 N. J. L. 89, 94; *Commonwealth* v. *Wells*, 110 Pa. St. 463, 468; *People* v. *Cavanaugh*, 112 California, 674, 676, 677, and other cases, including *United States* v. *O'Toole*, 236 Fed. Rep. 993, 996 (heard with *United States* v. *Gradwell*, 243 U. S. 476, and affirmed).

We find in Art. I, § 6, subdiv. 2, the provision that "No Senator or Representative shall, during the time for which he was *elected*, be appointed to any civil office under the authority of the United States," etc. It is obvious that the word "*elected*" does not mean "nominated." And the Senator or Representative is elected at the "*election*" and not before.

The "elections" of Representatives to which Art. I, § 4, refers, and the manner of holding which may be regulated by Congress, are the "elections" at which the "electors," to whom reference is made in Art. I, § 2, vote. It is because they vote at the "elections" for members of the House that they are called "electors." But the term "electors" like the term "elections" has no reference to a nominating primary. If Congress has the power to regulate a nominating primary, it has also the power to regulate a nominating convention and the vote of delegates at a nominating convention.

We venture to say that there is not a word in the Constitution, or in any contemporary document, which can be tortured into a support of the view that "*elections*" in Art. I, § 4, comprehends any nominating system.

The meaning of the word "elections" is not extended by the expression "*manner of holding*" elections, for the manner of holding the election is necessarily limited to the election which is held.

If Congress under Art. I, § 4, has the power which

it has sought to exercise in the statute in question, it has the power to *abolish all primary elections* for Senators and Representatives in every State of the Union. It has the power to establish conventions, to overthrow conventions, to provide any sort of a primary that it may desire to provide. Such interferences with the rights and privileges of the citizens of the several States have no warrant in the Constitution.

The Solicitor General and *Mr. Frank C. Dailey*, Special Assistant to the Attorney General, for the United States:

A Senator being an officer of the United States holding an office created by the Constitution and constituting a part of the Federal Government, all matters relating to his election belong to the Government of the United States, which has the same power over them that the States have over matters relating to the election of state officers, unless restricted by the Constitution itself.

It is assumed in the argument in behalf of the plaintiffs in error that the only power which Congress has over the election of Senators and Representatives is derived from Art. I, § 4, of the Constitution, relating to the times, places, and manner of holding such elections. This is by no means true. That section, on the contrary, contains only a grant of power to the States to be exercised subject to the control of Congress, in the exercise of a power which would be its, even if this section were not in the Constitution.

The Government of the United States is not a confederation of States. It is a government ordained by the people of the United States and, within the sphere of its powers, wholly independent of the state governments. A Senator or a Representative in Congress holds an office which was created by the Constitution. He is chosen not by the States but by that portion of the people of the United States who reside in the State in which he

is elected. He is an officer not of any State but of the Federal Government. *Lamar* v. *United States*, 241 U. S. 103, 112. Unless, therefore, the Constitution itself indicates a contrary intention, his election is a matter which concerns only the Federal Government and in no way a state government. It would certainly be an anomaly if one government had the unrestricted power to control matters affecting the choice of the officers of another and entirely independent government. Control of matters relating to the selection of those who are to function as a part of a particular government would seem necessarily to inhere in that government itself. *Ex parte Yarbrough*, 110 U. S. 651, 657.

It is true that the Constitution fixes the qualification of voters by reference to state laws. This does not mean, however, that the voter derives his right to vote from the State rather than from the Constitution of the United States. *Ex parte Yarbrough*, *supra*, 663.

Whatever power the States have over matters relating to the election of federal officers is not one of their reserved powers but a power expressly conferred by the Constitution.

The only power conferred on the States by the Constitution over matters relating to the election of Senators and Representatives is expressly made subordinate to the power of Congress over the same matter. Const., Art. I, § 4; Seventeenth Amdt. In effect, what was done by § 4 was to provide that the first Congress should be elected through the use of the election machinery of the various States, and that this method of electing congressmen should continue, except as Congress might, from time to time, see fit to alter it or to supplant it with election machinery of its own. If, therefore, the power to make regulations relating to primary elections is included in the power to prescribe the manner of holding elections, the exercise of this power is subject to the

control of Congress. Whatever power the States may exert over congressional or senatorial primaries, in the absence of action by Congress, may be exerted under the express provision of § 4 by Congress whenever deemed necessary.

If Congress has no power to make regulations of the kind now involved, neither have States, and there is no power anywhere which can control and prevent excessive expenditures by candidates for senatorial or congressional nominations. And yet, practically, and to all intents and purposes in many States, the most important and decisive act in the choosing of officers is the nomination.

The States undoubtedly have the power to regulate primary elections for the selection of candidates for state offices, because such regulations are necessary to protect the integrity of elections themselves. For the same reason Congress has the power to regulate primary elections for choosing candidates for federal offices.

Ample authority to sustain this legislation is found in Art. I, § 4, of the Constitution, even if the necessary power must be derived from that section; and, even if the word "elections" as there used is not construed as including primary elections, the law is still constitutional. This section must be read in connection with the last clause of Art. I, § 8, which confers upon Congress the power to make all laws which shall be necessary and proper for carrying into execution the powers expressly granted. *Ex parte Siebold*, 100 U. S. 371, 396; *Ex parte Yarbrough*, 110 U. S. 651, 658; *United States* v. *Gradwell*, 243 U. S. 476, 482.

Manifestly, this provision of the Constitution grew out of the conviction that it would be suicidal for the new government to commit to any other government a controlling power over the choosing of its officers without reserving to itself a supervisory power. For a State to

arrange its election laws by providing for two elections, the first for the purpose of reducing the number of candidates and the second for the purpose of choosing between the surviving candidates, is, in many States, for all practicable purposes, equivalent to choosing the officials in the first or primary elections.

MR. JUSTICE MCREYNOLDS delivered the opinion of the court.

Plaintiffs in error—Truman H. Newberry, Paul H. King and fifteen others—were found guilty of conspiring (Criminal Code, § 37) to violate § 8, Act of Congress approved June 25, 1910, c. 392, 36 Stat. 822–824, as amended by Act of August 19, 1911, c. 33, 37 Stat. 25–29,—The Federal Corrupt Practices Act—which provides: "No candidate for Representative in Congress or for Senator of the United States shall give, contribute, expend, use, or promise, or cause to be given, contributed, expended, used, or promised, in procuring his nomination and election, any sum, in the aggregate, in excess of the amount which he may lawfully give, contribute, expend, or promise under the laws of the State in which he resides: *Provided*, That no candidate for Representative in Congress shall give, contribute, expend, use, or promise any sum, in the aggregate, exceeding five thousand dollars in any campaign for his nomination and election; and no candidate for Senator of the United States shall give, contribute, expend, use, or promise any sum, in the aggregate, exceeding ten thousand dollars in any campaign for his nomination and election: *Provided further*, That money expended by any such candidate to meet and discharge any assessment, fee, or charge made or levied upon candidates by the laws of the State in which he resides, or for his necessary personal expenses, incurred for himself alone, for travel and subsistence, stationery

and postage, writing or printing (other than in newspapers), and distributing letters, circulars, and posters, and for telegraph and telephone service, shall not be regarded as an expenditure within the meaning of this section, and shall not be considered any part of the sum herein fixed as the limit of expense and need not be shown in the statements herein required to be filed."

Act No. 109, § 1, Michigan Legislature, 1913, prohibits expenditure by or on behalf of a candidate, to be paid by him, in securing his nomination, of any sum exceeding twenty-five per centum of one year's compensation; and puts like limitation upon expenditures to obtain election after nomination. Section 1 is copied below.[1]

Taken with the state enactment, the federal statute in effect declares a candidate for the United States Senate punishable by fine and imprisonment, if (except for cer-

[1] Act No. 109, Michigan Legislature, 1913:

"Section 1. No sums of money shall be paid, and no expenses authorized or incurred by or on behalf of any candidate to be paid by him in order to secure or aid in securing his nomination to any public office or position in this State, in excess of twenty-five per cent of one year's compensation or salary of the office for which he is candidate: *Provided*, That a sum not exceeding fifty per cent of one year's salary may be expended by the candidates for Governor and Lieutenant Governor; or where the office is that of member of either branch of the Legislature of the State, the twenty-five per cent shall be computed on the salary fixed for the term of two years: *Provided further*, That no candidate shall be restricted to less than one hundred dollars in his campaign for such nomination. No sums of money shall be paid and no expense authorized or incurred by or on behalf of any candidate who has received the nomination to any public office or position in this State, in excess of twenty-five per cent of one year's salary or compensation of the office for which he is nominated; or where the office is that of member of either branch of the Legislature of the State, the twenty-five per cent shall be computed on the salary fixed for the term of two years: *Provided*, That no candidate shall be restricted to less than one hundred dollars. No sum of money shall be paid and no expenses authorized or incurred by or on behalf of any candidate contrary to the provisions of this act."

tain specified purposes) he give, contribute, expend, use, promise or cause to be given, contributed, expended, used or promised in procuring his nomination and election more than $3,750.00—one-half of one year's salary. Under the construction of the act urged by the Government and adopted by the court below it is not necessary that the inhibited sum be paid, promised or expended by the candidate himself, or be devoted to any secret or immoral purpose. For example, its open and avowed contribution and use by supporters upon suggestion by him or with his approval and coöperation in order to promote public discussion and debate touching vital questions or to pay necessary expenses of speakers, etc., is enough. And upon such interpretation the conviction below was asked and obtained.

The indictment charges: That Truman H. Newberry became a candidate for the Republican nomination for United States Senator from Michigan at the primary election held August 27, 1918; that by reason of selection and nomination therein he became a candidate at the general election, November 5, 1918; that he and 134 others (who are named) at divers times from December 1, 1917, to November 5, 1918, unlawfully and feloniously did conspire, combine, confederate, and agree together to commit the offense on his part of wilfully violating the Act of Congress approved June 25, 1910, as amended, by giving, contributing, expending, and using and by causing to be given, contributed, expended and used, in procuring his nomination and election at said primary and general elections, a greater sum than the laws of Michigan permitted and above ten thousand dollars, to wit, $100,000.00, and on the part of the other defendants of aiding, counseling, inducing, and procuring Newberry as such candidate to give, contribute, expend, and use or cause to be given, contributed, expended and used said large and excessive sum in order to procure his nomination

and election. Plaintiffs in error were convicted under count one, set out in the margin.[1]

(COUNT ONE)

[1] That Truman H. Newberry, Chase S. Osborne, Henry Ford and William B. Simpson, before and on August 27, 1918, were candidates for the Republican nomination for the office of Senator in the Congress of the United States from the State of Michigan at the primary election held in said State on that day under the laws of said State, and Henry Ford and James Helm, before and on said August 27, 1918, were candidates for the Democratic nomination for the same office at said Primary election; that from said August 27, 1918, to and including November 5, 1918, said Truman H. Newberry and said Henry Ford, by reason of their election and nomination at said Primary election, became and were opposing candidates for election to the office of Senator in the Congress of the United States from said State of Michigan at the general election held in said State on said November 5, 1918, —said Truman H. Newberry of the Republican Party and said Henry Ford of the Democratic Party,—each of said candidates having, on said August 27, 1918, and said November 5, 1918, attained to the age of thirty years and upwards and been a citizen of the United States for more than nine years and each then being an inhabitant and resident of said State; and that said Truman H. Newberry, Paul H. King [and 133 others], hereinafter called the defendants, continuously and at all and divers times throughout the period of time from December 1, 1917, to and including said November 5, 1918, at and within said Southern Division of said Western District of Michigan, unlawfully and feloniously did conspire, combine, confederate and agree together, and with divers other persons to said grand jurors unknown, to commit an offense against the United States, to-wit, the offense on the part of said Truman H. Newberry of wilfully violating the Act of Congress approved June 25, 1910, as amended by the Acts of August 19, 1911, and August 23, 1912, by giving, contributing, expending and using and by causing to be given, contributed, expended and used, in procuring his nomination and election as such Senator at said primary and general elections, a sum, in the aggregate, in excess of the amount which he might lawfully give, contribute, expend, or use, or cause to be given, contributed, expended or used for such purpose under the laws of said State of Michigan, to-wit the sum of one hundred thousand dollars, and by giving, contributing, expending and using and causing to be given, contributed, expended and used in procuring his nomination and election as such Senator, at said primary and

The court below overruled a duly interposed demurrer which challenged the constitutionality of § 8; and by so doing we think fell into error.

Manifestly, this section applies not only to final elections for choosing Senators but also to primaries and conventions of political parties for selection of candidates. Michigan and many other States undertake to control these primaries by statutes and give recognition to their results. And the ultimate question for solution here is whether under the grant of power to regulate "the manner of holding elections" Congress may fix the maximum sum which a candidate therein may spend, or advise or cause to be contributed and spent by others to procure his nomination.

Section 4, Art. I, of the Constitution provides: "The times, places and manner of holding elections for Senators and Representatives, shall be prescribed in each State

---

general elections, a sum in the aggregate, in excess of ten thousand dollars, to-wit, said sum of one hundred thousand dollars, and on the part of said other defendants of aiding, counseling, inducing and procuring said Truman H. Newberry so to give, contribute, expend and use and cause to be given, contributed, expended and used said large sum of money in excess of the amounts permitted by the laws of the State of Michigan and the said Acts of Congress; the same to be money so unlawfully given, contributed, expended and used by said Truman H. Newberry and by him caused to be given, contributed, expended and used as such candidate for the following and other purposes, objects and things, to-wit:

Advertisements in newspapers and other publications;

Print paper, cuts, plates and other supplies furnished to newspaper publishers;

Subscriptions to newspapers;

Production, distribution and exhibition of moving pictures;

Traveling and subsistence expenses of campaign managers, public speakers, secret propagandists, field, district and county agents and solicitors, and of voters not infirm or disabled

Compensation of campaign managers, public speakers and secret propagandists, and of field, district and county agents and solicitors;

Appropriating and converting to the use of the defendants them-

by the Legislature thereof; but the Congress may at any time by law make or alter such regulations, except as to the places of choosing Senators." Here is the source of congressional power over the elections specified. It has been so declared by this court—*Ex parte Siebold*, 100 U. S. 371; *United States* v. *Gradwell*, 243 U. S. 476, 481—and the early discussions clearly show that this was then the accepted opinion. The Federalist, LVIII, LIX, LX; Elliot's Debates, vol. II, 50, 73, 311; vol. III, 86, 183, 344, 375; vol. IV, 75, 78, 211.

---

selves, and each of them, large sums of money under the guise and pretense of payment of their expenses and compensation for their services;

Rent of offices and public halls;

Bribery of election officials;

Unlawful assistance of election officials;

Bribery of voters;

Expenses and compensation of Democratic obstructionist candidates at the primary election;

Expenses and compensation of detectives;

Dinners, banquet and other entertainments given to persons believed to be influential in said State of Michigan;

And no part of which said money was to be money expended by said Truman H. Newberry, as such candidate, to meet or discharge assessments, fees, or charges made or levied upon candidates by the laws of said State, or for his necessary personal expenses, incurred for himself alone, for travel and subsistence, stationery and postage, writing or printing (other than in newspapers), or for distributing letters, circulars, or postage, or for telegraph or telephone service, or for proper legal expenses in maintaining or contesting the results of either of said elections.

[38 distinct and separate overt acts are specified].

And so the grand jurors aforesaid, upon their oaths aforesaid, do say, that said defendants, continuously and at all and divers times throughout the period of time in this count mentioned, at and within said division and district, in manner and form in this count aforesaid, unlawfully and feloniously did conspire to commit an offense against the United States, and certain of them did do acts to effect the object of the conspiracy; Against the peace and dignity of the United States, and contrary to the form of the statute of the same in such case made and provided.

We find no support in reason or authority for the argument that because the offices were created by the Constitution, Congress has some indefinite, undefined power over elections for Senators and Representatives not derived from § 4. "The government, then, of the United States, can claim no powers which are not granted to it by the Constitution, and the powers actually granted, must be such as are expressly given, or given by necessary implication." *Martin* v. *Hunter's Lessee*, 1 Wheat. 304, 326. Clear constitutional provisions also negative any possible inference of such authority because of the supposed anomaly "if one government had the unrestricted power to control matters affecting the choice of the officers of another." Mr. Iredell (afterwards of this court) in the North Carolina Convention of 1788, pointed out that the States may—must indeed—exert some unrestricted control over the Federal Government. "The very existence of the general government depends on that of the state governments. The state legislatures are to choose the senators. Without a Senate there can be no Congress. The state legislatures are also to direct the manner of choosing the President. Unless, therefore, there are state legislatures to direct that manner, no President can be chosen. The same observation may be made as to the House of Representatives, since, as they are to be chosen by the electors of the most numerous branch of each state legislature, if there are no state legislatures, there are no persons to choose the House of Representatives. Thus it is evident that the very existence of the general government depends on that of the state legislatures." Elliot's Debates, vol. IV, p. 52. See also The Federalist, XLIV. The federal features of our Government are so clear and have been so often declared that no valuable discussion can proceed upon the opposite assumption.

Undoubtedly elections within the original intendment

of § 4 were those wherein Senators should be chosen by Legislatures and Representatives by voters possessing "the qualifications requisite for electors of the most numerous branch of the State Legislature." Art. I, §§ 2 and 3. The Seventeenth Amendment, which directs that Senators be chosen by the people, neither announced nor requires a new meaning of election and the word now has the same general significance as it did when the Constitution came into existence—final choice of an officer by the duly qualified electors. *Hawke* v. *Smith*, 253 U. S. 221. Primaries were then unknown. Moreover, they are in no sense elections for an office, but merely methods by which party adherents agree upon candidates whom they intend to offer and support for ultimate choice by all qualified electors. General provisions touching elections in constitutions or statutes are not necessarily applicable to primaries—the two things are radically different. And this view has been declared by many state courts. *People* v. *Cavanaugh*, 112 California, 674; *State* v. *Erickson*, 119 Minnesota, 152; *State* v. *Taylor*, 220 Missouri, 618; *State* v. *Woodruff*, 68 N. J. L. 89; *Commonwealth* v. *Wells*, 110 Pa. St. 463; *Ledgerwood* v. *Pitts*, 122 Tennessee, 570.

Sundry provisions of the Constitution indicate plainly enough what its framers meant by elections and the "manner of holding" them. "The House of Representatives shall be composed of members chosen every second year by the people of the several States." "No person shall be a Representative. . . who shall not, when elected, be an inhabitant of that State in which he shall be chosen." "When vacancies happen in the representation from any State, the executive authority thereof shall issue writs of election to fill such vacancies." "Immediately after they [the Senators] shall be assembled in consequence of the first election, they shall be divided as equally as may be into three classes." "No person

shall be a Senator . . . who shall not, when elected, be an inhabitant of that State for which he shall be chosen." "Each House shall be the judge of the elections, returns and qualifications of its own members." "No Senator or Representative shall, during the time for which he was elected, be appointed to any civil office," etc. "The executive power shall be vested in a President of the United States of America. He shall hold his office during the term of four years, and, together with the Vice-President, chosen for the same term, be elected as follows." "The President shall, at stated times, receive for his services a compensation, which shall neither be increased nor diminished during the period for which he shall have been elected." And provisions in the Seventeenth Amendment are of like effect.

The plain words of the Seventeenth Amendment and those portions of the original Constitution directly affected by it, should be kept in mind. Art. I, § 3—"The Senate of the United States shall be composed of two Senators from each State, chosen by the Legislature thereof, for six years; and each Senator shall have one vote. Immediately after they shall be assembled in consequence of the first election, they shall be divided as equally as may be into three classes." "And if vacancies happen by resignation, or otherwise, during the recess of the legislature of any State, the executive thereof may make temporary appointments until the next meeting of the legislature, which shall then fill such vacancies." Seventeenth Amendment—"The Senate of the United States shall be composed of two Senators from each State, elected by the people thereof, for six years; and each Senator shall have one vote. The electors in each State shall have the qualifications requisite for electors of the most numerous branch of the State legislatures. When vacancies happen in the representation of any State in the Senate, the executive authority of such State shall

issue writs of election to fill such vacancies: *Provided*, That the legislature of any State may empower the executive thereof to make temporary appointment until the people fill the vacancies by election as the legislature may direct. This amendment shall not be so construed as to affect the election or term of any Senator chosen before it becomes valid as part of the Constitution."

As finally submitted and adopted the Amendment does not undertake to modify Art. I, § 4, the source of congressional power to regulate the times, places and manner of holding elections. That section remains "intact and applicable both to the election of Representatives and Senators." (Cong. Rec., vol. 46, p. 848.) When first reported, January 11, 1911, by Senator Borah for the Judiciary Committee, the proposed Seventeenth Amendment contained a clause providing, "The times, places and manner of holding elections for Senators shall be as prescribed in each state by the legislature thereof"—the avowed purpose being thereby to modify § 4, Art. I, by depriving Congress of power to regulate the *manner of holding elections* for Senators. (A copy of the original resolution as presented to the Senate is in the margin.)[1]

---

[1] S. J. Res., 134, 61st Congress, Cong. Rec., vol. 46, p. 847.

"Resolved by the Senate and House of Representatives of the United States of America in Congress assembled (two-thirds of each House concurring therein), That in lieu of the first paragraph of section 3 of Article I of the Constitution of the United States, and in lieu of so much of paragraph 2 of the same section as relates to the filling of vacancies, and in lieu of all of paragraph 1 of section 4 of said Article I, in so far as same relates to any authority in Congress to make or alter regulations as to the times or manner of holding elections for Senators, the following be proposed as an amendment to the Constitution, which shall be valid to all intents and purposes as part of the Constitution when ratified by the legislatures of three-fourths of the States:

" 'The Senate of the United States shall be composed of two Senators from each State, elected by the people thereof for six years; and each

Upon recommendation of a minority of the Judiciary Committee this clause was eliminated and reference to § 4, Art. I, omitted from the Resolution. After prolonged debate in the 61st and 62nd Congresses the Amendment in its present form was submitted for ratification. See Sen. Rep. 961, 61st Cong., 3rd sess.; Sen. Rep. 35, 62nd Cong., 1st sess.; Cong. Rec. vol. 46, pp. 847, 851, *et seq.;* vol. 47, *passim*, and pp. 1924, 1925, 1966.

Apparently because deemed unimportant no counsel on either side referred to "An Act Providing a temporary method of conducting the nomination and election of United States Senators," approved June 4, 1914, c. 103, 38 Stat. 384. To show its irrelevancy and prevent misapprehension the act is copied in the margin.[1] Section

---

Senator shall have one vote. The electors in each State shall have the qualifications requisite for electors of the most numerous branch of the State legislatures.

" 'The times, places, and manner of holding elections for Senators shall be as prescribed in each State by the legislature thereof.

" 'When vacancies happen in the representation of any State in the Senate, the executive authority of such State shall issue writs of election to fill such vacancies: *Provided*, That the legislature of any State may empower the executive thereof to make temporary appointments until the people fill the vacancies by election, as the legislature may direct.

" 'This amendment shall not be so construed as to affect the election or term of any Senator chosen before it becomes valid as part of the Constitution.' "

[1] Act of June 4, 1914, c. 103, 38 Stat. 384.

"An Act Providing a temporary method of conducting the nomination and election of United States Senators.

"*Be it enacted by the Senate and House of Representatives of the United States of America in Congress assembled*, That at the regular election held in any State next preceding the expiration of the term for which any Senator was elected to represent such State in Congress, at which election a Representative to Congress is regularly by law to be chosen, a United States Senator from said State shall be elected by the people thereof for the term commencing on the fourth day of March next thereafter.

2, which contains the only reference to nomination of candidates for Senator, expired by express limitation June 4, 1917, more than a year prior to the conduct here challenged. The act has no criminal provisions, makes no reference to the earlier statute upon which this prosecution is founded and sheds no light on the power of Congress to regulate primaries and conventions. Its terms indicate intention that the machinery for designating party candidates shall remain under state control. But in no view can an attempt to exercise power be treated as conclusive evidence that Congress possesses such power. Otherwise serious discussion of constitutional limitations must cease. Moreover, the criminal statute now relied upon antedates the Seventeenth Amendment and must be tested by powers possessed at the time of its enactment. An after-acquired power can not *ex proprio vigore* validate a statute void when enacted. See Sutherland Stat. Constr., 2nd ed., vol. I, § 107.

A concession that the Seventeenth Amendment might

"Sec. 2. That in any State wherein a United States Senator is hereafter to be elected either at a general election or at any special election called by the executive authority thereof to fill a vacancy, until or unless otherwise specially provided by the legislature thereof, the nomination of candidates for such office not heretofore made shall be made, the election to fill the same conducted, and the result thereof determined, as near as may be in accordance with the laws of such State regulating the nomination of candidates for and election of Members at Large of the National House of Representatives: *Provided*, That in case no provision is made in any State for the nomination or election of Representatives at Large, the procedure shall be in accordance with the laws of such State respecting the ordinary executive and administrative officers thereof who are elected by the vote of the people of the entire State: *And provided further*, That in any case the candidate for Senator receiving the highest number of votes shall be deemed elected.

"Sec. 3. That section two of this Act shall expire by limitation at the end of three years from the date of its approval."

Approved, June 4, 1914.

be applicable in this controversy if assisted by appropriate legislation would be unimportant since there is none. Section 2, Act of June 4, 1914, had expired by express limitation many months before Newberry became a candidate, and counsel very properly disregarded it.

Because deemed appropriate in order effectively to regulate the manner of holding general elections, this court has upheld federal statutes providing for supervisors and prohibiting interference with them, declaring criminal failure by election officers to perform duties imposed by the State, and denouncing conspiracies to prevent voters from freely casting their ballots or having them counted. *Ex parte Siebold*, 100 U. S. 371; *Ex parte Clarke*, 100 U. S. 399; *Ex parte Yarbrough*, 110 U. S. 651; *In re Coy*, 127 U. S. 731; *United States* v. *Mosley*, 238 U. S. 383. These enactments had direct and immediate reference to elections by the people and decisions sustaining them do not control the present controversy. Congress clearly exercised its power to regulate the manner of holding an election when it directed that voting must be by written or printed ballot or voting machines. c. 154, 30 Stat. 836.

Section 4 was bitterly attacked in the State Conventions of 1787–1789, because of its alleged possible use to create preferred classes and finally to destroy the States. In defense, the danger incident to absolute control of elections by the States and the express limitations upon the power, were dwelt upon. Mr. Hamilton asserted: "The truth is that there is no method of securing to the rich the preference apprehended, but by prescribing qualifications of property either for those who may elect, or be elected. But this forms no part of the power to be conferred upon the National Government. Its authority would be expressly restricted to the regulation of the *times*, the *places*, and the *manner* of elections. The qualifications of the persons who may choose, or be chosen, as has been remarked upon other occasions, are defined and fixed

in the Constitution, and are unalterable by the Legislature.[41] The Federalist, LIX, LI. The history of the times indicates beyond reasonable doubt that, if the Constitution makers had claimed for this section the latitude we are now asked to sanction, it would not have been ratified. See Story on the Const., §§ 814, *et seq.*

Our immediate concern is with the clause which grants power by law to regulate the "*manner of holding* elections for Senators and Representatives"—not broadly to regulate them. As an incident to the grant there is, of course, power to make all laws which shall be necessary and proper for carrying it into effect. Art. I, § 8, cl. 18. Although the Seventeenth Amendment now requires Senators to be chosen by the people, reference to the original plan of selection by the legislatures may aid in interpretation.

Who should participate in the specified elections was clearly indicated—members of state legislatures and those having "the qualifications requisite for electors of the most numerous branch of the state legislature." Who should be eligible for election was also stated. "No person shall be a Representative who shall not have attained the age of twenty-five years, and been seven years a citizen of the United States, and who shall not, when elected, be an inhabitant of that State in which he shall be chosen." "No person shall be a Senator who shall not have attained to the age of thirty years, and been nine years a citizen of the United States, and who shall not, when elected, be an inhabitant of that State for which he shall be chosen." Two Senators were allotted to each State and the method was prescribed for determining the number of Representatives. Subject to these important limitations, Congress was empowered by law to regulate the times, places and manner of holding the elections, except as to the places of choosing Senators. "These words are used without any veiled or obscure significance" but in their natural and usual sense.

If it be practically true that under present conditions a designated party candidate is necessary for an election—a preliminary thereto—nevertheless his selection is in no real sense part of the manner of holding the election. This does not depend upon the scheme by which candidates are put forward. Whether the candidate be offered through primary, or convention, or petition, or request of a few, or as the result of his own unsupported ambition, does not directly affect the manner of holding the election. Birth must precede but it is no part of either funeral or apotheosis.

Many things are prerequisites to elections or may affect their outcome—voters, education, means of transportation, health, public discussion, immigration, private animosities, even the face and figure of the candidate; but authority to regulate the manner of holding them gives no right to control any of these. It is settled, *e. g.*, that the power to regulate interstate and foreign commerce does not reach whatever is essential thereto. Without agriculture, manufacturing, mining, etc., commerce could not exist, but this fact does not suffice to subject them to the control of Congress. *Kidd* v. *Pearson*, 128 U. S. 1.

Elections of Senators by state legislatures presupposed selection of their members by the people; but it would hardly be argued that therefore Congress could regulate such selection. In the Constitutional Convention of 1787, when replying to the suggestion that state legislatures should have uncontrolled power over elections of members of Congress, Mr. Madison said: "It seems as improper in principle, though it might be less inconvenient in practice, to give to the state legislatures this great authority over the election of the representatives of the people in the general legislature, as it would be to give to the latter a like power over the election of their representatives in the state legislatures." Supplement to Elliot's Debates, vol. V, p. 402.

We cannot conclude that authority to control party primaries or conventions for designating candidates was bestowed on Congress by the grant of power to regulate the manner of holding elections. The fair intendment of the words does not extend so far; the framers of the Constitution did not ascribe to them any such meaning. Nor is this control necessary in order to effectuate the power expressly granted. On the other hand, its exercise would interfere with purely domestic affairs of the State and infringe upon liberties reserved to the people.

It should not be forgotten that, exercising inherent police power, the State may suppress whatever evils may be incident to primary or convention. As "Each House shall be the judge of the elections, returns and qualifications of its own members," and as Congress may by law regulate the times, places and manner of holding elections, the National Government is not without power to protect itself against corruption, fraud or other malign influences.

The judgment of the court below must be reversed and the cause remanded for further proceedings in conformity with this opinion.

Reversed.

MR. JUSTICE MCKENNA concurs in this opinion as applied to the statute under consideration which was enacted prior to the Seventeenth Amendment; but he reserves the question of the power of Congress under that Amendment.

MR. CHIEF JUSTICE WHITE, dissenting from the opinion, but concurring with a modification in the judgment of reversal:

The conviction and sentence under review were based on an indictment charging a conspiracy to commit vio-

lations of the act of Congress known as the Corrupt Practices Act, as made applicable to state laws dealing with state nominating primaries for, and the ensuing state elections of, United States Senators and Representatives in Congress. The case is here by direct writ of error, because of the contention that primaries of that character are not subject to the regulating power of Congress, and as an incident there is involved the contention that, even if the act of Congress was constitutional, it had been prejudicially misconstrued. Sustaining the first of these contentions and therefore deciding the act to be unconstitutional, the court reverses and finally disposes of the case. Although I am unable to concur in the conclusion as to the want of power of Congress and in the judgment of reversal as rendered, I am nevertheless of opinion that there should be a judgment of reversal without prejudice to a new trial, because of the grave misapprehension and grievous misapplication of the statute upon which the conviction and sentence below were based. I state the reasons which control me as to both these subjects.

By an amendment to the Corrupt Practices Act of 1910, Congress, in 1911, dealt with state primaries for the nomination of Senators and Representatives in Congress and with the election after nomination of such candidates (Act of June 25, 1910, c. 392, 36 Stat. 822; Act of August 19, 1911, c. 33, § 8, 37 Stat. 25, 28). At that time there existed in the State of Michigan a law regulating state nominating primaries which included candidates for state offices as well as for the Senate and House of Representatives of the United States. These primaries were held in the month of August in each year preceding the November general election. By that law the result of the primaries determined the right to have a person's name placed as a candidate on the ballot at the general election, and, in the case of United States Senators,

provision was made for the return of the result of the primary to the state legislature before the time when the duty of that body to elect a Senator would arise.

The Seventeenth Amendment to the Constitution, providing for the election of United States Senators by popular vote, was promulgated in May, 1913. In June, 1914, Congress by legislation carrying out the Amendment provided that thereafter Senators should be elected by popular vote, and, where state laws to that effect existed, made them applicable. But, evidently to give time for the States to enact the necessary legislation substituting for election by the legislature the method of election established by the Amendment, it was provided that, where no law for primaries by popular vote as to Senators existed, that subject should be controlled by the state law regulating primaries for the nomination of Representative at Large, if provided for, and if not, by the provisions controlling as to primaries for general state officers, the operation of these latter provisions being expressly limited to a term of three years (Act of June 4, 1914, c. 103, 38 Stat. 384). Within the time thus fixed and before the election which was held in this case, the State of Michigan, in order to conform its laws to the Amendment, modified them so as to provide for the election of Senators by popular vote, and made the general nominating state primary law applicable to that condition (Act No. 156, Mich. Acts of 1915), and, by virtue of the Amendment, the act of Congress, and the state law just stated, the primary with which we are concerned in this case was held in August, 1918.

The plaintiff in error, Newberry, was a candidate for the nomination of the Republican party as United States Senator, and, having been nominated at such primary, became a candidate at the ensuing November election, and was returned as elected. Subsequently the indictment under which the conviction below was had was

presented, charging him and others, in six counts, with a conspiracy to commit violations of provisions of the Corrupt Practices Act relating to state nominating primaries as well as to the resulting general election. It is not at this moment necessary to describe the nature of these accusations further, since it is not questioned that the indictment charged a conspiracy to commit crimes within the intendment of the Corrupt Practices Act and hence involved the question of the constitutional power of Congress which the court now adversely decides and the basis for which I now come to consider.

As the nominating primary was held after the adoption of the Seventeenth Amendment, the power must have been sanctioned by that Amendment, but for the purpose of clarity I consider the question of the power, first from the provisions of the Constitution as they existed before the Amendment, and second in contemplation of the light thrown upon the subject by the force of the Amendment.

The provisions of §§ 2 and 3 of Article I of the Constitution, fixing the composition of the House of Representatives and of the Senate and providing for the election of Representatives by vote of the people of the several States and of Senators by the state legislatures, were undoubtedly reservoirs of vital federal power constituting the generative sources of the provisions of § 4, cl. 1, of the same Article, creating the means for vivifying the bodies previously ordained (Senate and House), that is, providing: "The times, places and manner of holding elections for Senators and Representatives, shall be prescribed in each State by the Legislature thereof; but the Congress may at any time by law make or alter such regulations, except as to the places of choosing Senators."

As without this grant no state power on the subject was possessed, it follows that the state power to create primaries as to United States Senators depended upon

the grant for its existence. It also follows that, as the conferring of the power on the States and the reservation of the authority in Congress to regulate were absolutely coterminous, except as to the place of choosing Senators which is not here relevant, it results that nothing is possible of being done under the former which is not subjected to the limitation imposed by the latter. And this is illustrated by the legislation of Congress and the decisions of this court upholding the same. See, "Act to regulate the Times and Manner of holding Elections for Senators in Congress," approved July 25, 1866, 14 Stat. 243; Act of May 31, 1870, 16 Stat. 144; Act of July 14, 1870, 16 Stat. 254; Act of June 10, 1872, 17 Stat. 347; *Ex parte Siebold*, 100 U. S. 371; *Ex parte Clarke*, 100 U. S. 399; *Ex parte Yarbrough*, 110 U. S. 651; *United States* v. *Mosley*, 238 U. S. 383.

But it is said that, as the power which is challenged here is the right of a State to provide for and regulate a state primary for nominating United States Senators free from the control of Congress, and not the election of such Senators, therefore, as the nominating primary is one thing and the election another and different thing, the power of the State as to the primary is not governed by the right of Congress to regulate the times and manner of electing Senators. But the proposition is a suicidal one, since it at one and the same time retains in the State the only power it could possibly have as delegated by the clause in question and refuses to give effect to the regulating control which the clause confers on Congress as to that very power. And mark, this is emphasized by the consideration that there is no denial here that the States possess the power over the federal subject resulting from the provision of the Constitution, but a holding that Congress may not exert as to such power to regulate authority which the terms of the identical clause of the Constitution confer upon it.

But, putting these contradictions aside, let me test the contention from other and distinct points of view: (1) In last analysis the contention must rest upon the proposition that there is such absolute want of relation between the power of government to regulate the right of the citizen to seek a nomination for a public office and its authority to regulate the election after nomination, that a paramount government authority having the right to regulate the latter is without any power as to the former. The influence of who is nominated for elective office upon the result of the election to fill that office is so known of all men that the proposition may be left to destroy itself by its own statement.

(2) Moreover, the proposition, impliedly at least, excludes from view the fact that the powers conferred upon Congress by the Constitution carry with them the right "to make all laws which shall be necessary and proper for carrying into execution the foregoing powers" (Art. I, § 8, cl. 18), and in doing so virtually disregards the previous legislative history and the decisions of this court sanctioning the same, to which we have referred, since that practice and those decisions unmistakably recognize that the power under the clause in question extends to all the prerequisite and appropriate incidents necessary to the discharge of the authority given.

(3) From a somewhat different point of view the same result is even more imperatively required. Thus, as has been seen, the election was had under the Seventeenth Amendment to the Constitution, providing for the election of Senators by popular vote instead of by the state legislatures. In the resolution providing for the passage of that Amendment through Congress, as first reported by Senator Borah on behalf of the judiciary committee, after making the changes necessary to substitute a provision causing Senators to be elected by popular vote instead of by the legislatures of the several States, the

provision of § 4 of Article I reserving to Congress the power "to make or alter," except as to places, the regulations adopted by the several States as to the "times, places and manner" of electing Senators, was omitted, thus leaving all power on the subject in the States, free from any regulating control of Congress. (S. Rep. 961, 61st Cong., 3d sess.)

There was division, however, concerning the matter, manifested by a proposition to amend the resolution, as reported, so as to retain the omitted provision, thus preserving the power of Congress as originally conferred (Cong. Rec., vol. 46, Part 1, p. 847). The legislative situation thus created was aptly stated by Senator Borah, referring to the report of the committee and to the proposition (submitted by Senator Sutherland of Utah) to amend that report and the resolution accompanying it. He said:

"In reference to the amendment which has been suggested by the Senator from Utah [Mr. Sutherland], it was considered at some length before the committee. The proposition is a simple one. As the joint resolution now stands, the times, places, and manner of electing United States Senators is left entirely to the State. The State may determine the rules and regulations, and the times, places, and manner of holding elections for United States Senators.

"If the amendment as offered by the Senator from Utah should prevail, then the matter would be left as it now is, subject to the supervision and control of Congress." [1]

After much consideration, the amendment offered by Senator Sutherland was carried.[2] But the reported resolution, as thus amended, did not pass during that Congress. In the first session of the following Congress, however, the 62d Congress, a resolution identical in

[1] Cong. Rec., vol. 46, Part 1, p. 851.

[2] Cong. Rec., vol. 46, Part 4, p. 3307.

terms with the one which had been reported in the Senate at the previous session was introduced in the House and passed the same.[1] In the Senate the House resolution was favorably reported from the committee by Senator Borah,[2] accompanied, however, by a minority report by Senator Sutherland,[3] offering as a substitute a resolution preserving the complete power of Congress, as had been provided for in the Senate in the previous Congress, and an amendment to the same effect offered by Senator Bristow was subsequently adopted,[4] and as thus amended the resolution was ultimately submitted for ratification, and, as we have seen, was ratified and promulgated. (38 Stat. 2049.)

When the plain purpose of the Amendment is thus seen, and it is borne in mind that, at the time it was pending, the amendment to the Corrupt Practices Act dealing with state primaries for nominating United States Senators which is now before us was in the process of consideration in Congress, and when it is further remembered that, after the passage of the Amendment, Congress enacted legislation, so that the Amendment might be applied to state senatorial primaries, there would seem to be an end to all doubt as to the power of Congress.

It is not disputable that originally instructions to representatives in state legislatures by party conventions or by other unofficial bodies, as to the persons to be elected as United States Senators, were resorted to as a means of indirectly controlling that subject and thus, in a sense, restricting the constitutional provision as to the mode of electing Senators. The potentiality of instructions of that character to accomplish that result is

---

[1] H. Rep., No. 2, 62d Cong., 1st sess.
[2] Cong. Rec., vol. 47, Part 1, p. 787.
[3] S. Rep., No. 35, 62d Cong., 1st sess.
[4] Cong. Rec., vol. 47, Part 2, p. 1205.

amply shown by the development of our constitutional institutions as regards the electoral college, where it has come to pass that the unofficial nomination of party has rendered the discharge of its duties by the electoral college a mere matter of form. That in some measure at least a tendency to that result came about under the constitutional direction that Senators should be elected by the people [legislatures] would appear not doubtful. The situation on this subject is illustrated by a statement in a treatise by Haynes on "Election of Senators," 1906, p. 132, as follows:

"Notwithstanding our rigid Constitution's decree that the senators from the several States shall be elected by 'the legislatures thereof,' this act of the legislatures may be deprived of nearly all of its vitality. The election of President offers an illustration of the filching of actual power away from the electors in whom it is vested by law. When James Russell Lowell, a Republican elector for Massachusetts in 1876, was urged to exercise his independence and vote for Tilden, he declined, saying that 'whatever the first intent of the Constitution was, usage had made the presidential electors strictly the instruments of the party which chose them.' The Constitution remains unchanged, yet presidential electors recognize that they have been stripped of all discretion. It appears that under certain conditions the election of Senators by state legislatures has been and can be made an equally perfunctory affair."

The growth of the tendency to make the indirect result thus stated more effective evidently was the genesis of the statutory primary to nominate Senators. See statement concerning an amendment to the constitution of Nebraska on that subject as early as 1875, in the same treatise, p. 141.

The large number of States which at this day have by law established senatorial primaries shows the develop-

ment of the movement which originated so long ago under the circumstances just stated. They serve to indicate the tenacity of the conviction that the relation of the primary to the election is so intimate that the influence of the former is largely determinative of the latter. I have appended in the margin a statement from a publication on the subject,[1] showing how well founded this conviction is and how it has come to pass that in some cases at least the result of the primary has been in substance to render the subsequent election merely perfunctory. Under these conditions I find it impossible to say that the admitted power of Congress to control and regulate the election of Senators does not embrace, as

---

[1] "In many western and southern states the direct primary method has been applied to the choice of United States senators as well as to state officers.[1] In the southern states, victory in such a primary, on the Democratic side, is practically the equivalent of an election, as there is but one effective party in that section of the country. The direct nomination of senators is generally accomplished under voluntary party regulations, as in Alabama, Arkansas, South Carolina, and Virginia. In other cases, however, this method of choice has been placed under legal protection, as in Florida (1901), Mississippi (1902), Louisiana (1906), and Texas (1907). Some northern states have also adopted this method of direct nomination. Among northern states, Wisconsin led the way in 1903, followed by Oregon in 1904, Montana in 1905, Iowa, Washington, Nebraska, North Dakota in 1907, Illinois, Kansas, New Jersey, Ohio, and Oklahoma in 1908. . . . In some of the states, as in Oregon, candidates for the legislature are afforded an opportunity to pledge themselves to vote for the party candidate receiving the highest vote in the regular election. In other cases a pledge is made to vote for the candidate receiving the highest number of votes in the primary.[2]" (Merriam, Primary Elections, 1908, pp. 83-85.)

[1] On this general topic, see the excellent treatise on The Election of Senators, by George H. Haynes (1906), especially c. XI.

[2] Oregon, 1904, § 13. In Washington the candidate may pledge himself to vote for the *party* choice for United States senator (1907, § 31). This latter is the general rule.

appropriate to that power, the authority to regulate the primary held under state authority.

(4) It is true that the plenary reservation in Congress of the power to control the States in the exercise of the authority to deal with the times, places, and manner of electing Senators and Representatives, as originally expressed in the Constitution, caused much perturbation in the conventions of the several States which were called upon to consider ratification, resulting from the fear that such power to regulate might be extended to and embrace the regulation of the election of the members of the state legislatures who were to exercise the power to elect Senators. It is further true that articles in the Federalist and other papers published at the time served to dispel the fear by directing attention to the fact that the regulating power of Congress only extended to the times and manner of electing Senators and did not include an authority, even by implication, to deal with the election of the state legislatures, which was a power reserved to the States. But this only served to emphasize the distinction between the state and federal power and affords no ground at this late day for saying that the reserved state power has absorbed and renders impossible of exercise the authority of Congress to regulate the federal power concerning the election of United States Senators, submitted, to the extent provided, to the authority of the States upon the express condition that such authority should be subordinate to and controlled by congressional regulation.

Can any other conclusion be upheld except upon the theory that the phantoms of attenuated and unfounded doubts concerning the meaning of the Constitution, which have long perished, may now be revived for the purpose of depriving Congress of the right to exert a power essential to its existence, and this in the face of the fact that the only basis for the doubts which arose in

the beginning (the election of Senators by the state legislatures) has been completely removed by the Seventeenth Amendment?

I do not stop to refer to the state cases concerning the distinction between state legislative power to deal with elections and its authority to control primaries, as I cannot discover the slightest ground upon which they could be apposite, since here an inherent federal right and the provision of the Constitution in dealing with it are the subjects for consideration.

Moreover, in passing, I observe that, as this case concerns a state primary law imposing obligatory results, and the act of Congress dealing with the same, it is obvious that the effect of individual action is wholly beside the issue.

The consequence to result from a denial to Congress of the right to regulate is so aptly illustrated by the case in hand that in leaving the question I refer to it. Thus, it is stated and not denied that, in the state primary in question, one of the candidates, as permitted by the state law, propounded himself at the primary election as the candidate for the nomination for Senator of both the Republican and the Democratic parties. If the candidacy had been successful as to both, the subsequent election would have been reduced to the merest form.

In view, then, of the plain text of the Constitution, of the power exerted under it from the beginning, of the action of Congress in its legislation, and of the amendment to the Constitution, as well as of the legislative action of substantially the larger portion of the States, I can see no reason for now denying the power of Congress to regulate a subject which from its very nature inheres in and is concerned with the election of Senators of the United States, as provided by the Constitution.

The indictment remains to be considered. It contained six counts. For the moment, it suffices to say that the

first four all dealt with a common subject, that is, a conspiracy between Newberry and others named to contribute and expend, for the purposes of the state primary and general election, more money than allowed by the Corrupt Practices Act. The fifth count charged a conspiracy on the part of the defendants to commit a great number, to wit, one thousand, offenses against the United States, each to consist of giving money and things of value to a person to vote for Newberry at said election, and a great number, to wit, one thousand, other offenses against the United States, each to consist of giving money and things of value to a person to withhold his vote from Henry Ford at said general election. The sixth count charged a conspiracy to defraud by use of the mails.

At the trial, before the submission of the case to the jury, the court put the fifth count entirely out of the case by instructing the jury to disregard it, as there was no evidence whatever to sustain it. The bribery charge, therefore, disappeared. The second, third and fourth counts, dealing, as I have said, with one general subject, were found by the court to be all in substance contained in the first count. They were, therefore, by direction of the court, either eliminated or consolidated with the first count. Thus, as contained in that count, the matters charged in the first four counts were submitted to the jury, as was also the sixth count; but the latter we need not further consider, as upon it there was a verdict of not guilty.

The case therefore reduces itself solely to the matters covered in the first count. That count charged a conspiracy on the part of the defendants, 135 in number, including Newberry, to commit an offense against the United States, that is, the offense on the part of Newberry of violating the Corrupt Practices Act by giving, contributing, expending and using and by causing to be given, contributed, expended and used, in procuring

his nomination and election as such Senator at said primary and general elections, a sum in excess of the amount which he might lawfully give, contribute, expend or use, and cause to be given, contributed, expended or used for such purpose under the laws of Michigan, and in excess of $10,000, to wit, the sum of $100,000; and on the part of the other defendants of aiding, counseling, inducing, and procuring Newberry as such candidate to give, contribute, expend and use, or cause to be given, contributed, expended or used, said large and excessive sum, in order to procure his nomination and election.

Conspiracy to contribute and expend in excess of the amount permitted by the statute was, then, the sole issue, wholly disassociated from and disconnected with any corrupt or wrongful use of the amount charged to have been illegally contributed and expended. As, putting out of view the constitutional question already considered, the errors assigned are based solely upon asserted misconstructions of the statute by the court in its charge to the jury, we bring the statute at once into view. It provides, so far as relevant to the case before us:

"No candidate for . . . Senator of the United States shall give, contribute, expend, use, or promise, or cause to be given, contributed, expended, used, or promised, in procuring his nomination and election, any sum, in the aggregate, in excess of the amount which he may lawfully give, contribute, expend, or promise under the laws of the State in which he resides: *Provided*, That . . . no candidate for Senator of the United States shall give, contribute, expend, use, or promise any sum, in the aggregate, exceeding ten thousand dollars in any campaign for his nomination and election: . . ."

Coming to deal with the statute, the court, after pointing out in the most explicit terms that the limitation on the amount which might be lawfully contributed and expended or caused to be contributed and expended in

the case at hand was $3,750 (that being the limitation imposed by the laws of Michigan adopted by the statute of the United States just quoted), then proceeded, over objections duly reserved, to instruct as to the significance of the statute, involved in the prohibitions, (a) against giving, contributing, expending, or using, and (b) against causing to be given, contributed, expended, or used, money in excess of that permitted by the statute, saying on these subjects as follows:

(a) "It is important, therefore, that you should understand the meaning of the language employed in this Corrupt Practices Act, and that you should understand and comprehend the effect and scope of the act, and the meaning of the language there employed, and the effect and scope and extent of the prohibition against the expenditure and use of money therein contained.

"The words 'Give, contribute, expend or use' as employed in this statute have their usual and ordinary significance, and mean furnish, pay out, disburse, employ, or make use of. The term 'To cause to be expended, or used' as it is employed in this statute, means to occasion, to effect, to bring about, to produce the expenditure and use of the money.

"The prohibition contained in this statute against the expenditure and use of money by the candidate is not limited or confined to the expenditure and use of his own money. The prohibition is directed against the use and expenditure of excessive sums of money by the candidate from whatever source or from whomsoever those moneys may be derived."

(b) "The phrase which constitutes the prohibition against the candidate 'Causing to be given, contributed, expended or used excessive sums of money,' is not limited and not confined to expenditures and use of money made directly and personally by himself. This prohibition extends to the expenditure and use of excessive sums of

money in which the candidate actively participates, or assists, or advises, or directs, or induces, or procures. The prohibition extends not only to the expenditure and use of excessive sums of money by the candidate directly and personally, but to such use and expenditure through his agency, or procurement or assistance.

"To constitute a violation of this statute knowledge of the expenditure and use of excessive sums of money on the part of the candidate is not sufficient; neither is it sufficient to constitute a violation of this statute that the candidate merely acquiesces in such expenditures and use. But it is sufficient to constitute a violation of this statute if the candidate actively participates in doing the things which occasion such expenditures and use of money and so actively participates with knowledge that the money is being expended and used."

Having thus fixed the meaning of the prohibitions of the statute, the court came to apply them as thus defined to the particular case before it, saying:

(c) "To apply these rules to this case: If you are satisfied from the evidence that the defendant Truman H. Newberry at or about the time that he became a candidate for United States Senator was informed and knew that his campaign for the nomination and election would require the expenditure and use of more money than is permitted by law and with such knowledge became a candidate, and thereafter by advice, by conduct, by his acts, by his direction, by his counsel, or by his procurement he actively participated and took part in the expenditure and use of an excessive sum of money, of an unlawful sum of money, you will be warranted in finding that he did violate this statute known as the Corrupt Practices Act."

Whether the instructions marked (a) and (b), if unexplained, were, in view of the ambiguity lurking in many of the expressions used therein, prejudicially

erroneous, I do not think necessary to consider, since I see no escape from the conclusion that the instruction marked (c), which made application of the view of the statute stated in the previous passages (a) and (b), was in clear conflict with the text of the statute and was necessarily of a seriously prejudicial nature, since in substance it announced the doctrine that, under the statute, although a candidate for the office of Senator might not have contributed a cent to the campaign or caused others to do so, he nevertheless was guilty if he became a candidate or continued as such after acquiring knowledge that more than $3,750 had been contributed and was being expended in the campaign. The error in the instruction plainly resulted from a failure to distinguish between the subject with which the statute dealt—contributions and expenditures made or caused to be made by the candidate—and campaign contributions and expenditures not so made or caused to be made, and therefore not within the statute.

There can be no doubt, when the limitations as to expenditure which the statute imposed are considered in the light of its context and its genesis, that its prohibitions on that subject were intended, not to restrict the right of the citizen to contribute to a campaign, but to prohibit the candidate from contributing and expending or causing to be contributed and expended, to secure his nomination and election, a larger amount than the sum limited as provided in the statute. To treat the candidacy, as did the charge of the court, as being necessarily the cause, without more, of the contribution of the citizen to the campaign, was therefore to confound things which were wholly different, to the frustration of the very object and purpose of the statute. To illustrate: Under the instruction given, in every case where to the knowledge of the candidate a sum in excess of the amount limited by the statute was contributed by citizens to the

campaign, the candidate, if he failed to withdraw, would be subject to criminal prosecution and punishment. So also, contributions by citizens to the expenses of the campaign, if only knowledge could be brought home to them that the aggregate of such contributions would exceed the limit of the statute, would bring them, as illustrated by this case, within the conspiracy statute and accordingly subject to prosecution. Under this view, the greater the public service, and the higher the character, of the candidate, giving rise to a correspondingly complete and self-sacrificing support by the electorate to his candidacy, the more inevitably would criminality and infamous punishment result both to the candidate and to the citizen who contributed.

As it follows from the considerations which I have stated that the judgment below was, in my opinion, clearly wrong and therefore should be reversed, it is not necessary that I should go further and point out how cogently under the case presented the illustrations just previously made apply to it. For the reasons stated, although I dissent from the ruling of the court as to the unconstitutionality of the act of Congress, I nevertheless think its judgment of reversal should be adopted, qualified, however, so as to reserve the right to a new trial.

MR. JUSTICE PITNEY, concurring in part:

I concur in the judgment reversing the conviction of plaintiffs in error, but upon grounds fundamentally different from those adopted by the majority: my view being that there is no constitutional infirmity in the act of Congress that underlies the indictment, but that there was an error in the submission of the case to the jury that calls for a new trial.

The constitutional question is so important that it deserves treatment at length.

The Federal Corrupt Practices Act (Act of June 25, 1910, c. 392, 36 Stat. 822; amended by Act of August 19, 1911, c. 33, 37 Stat. 25, 28) limits the amount of money that may be given, contributed, expended, used, or promised, or caused to be given, contributed, expended, used, or promised by a candidate for Representative in Congress or for Senator of the United States in procuring his nomination and election, to a sum not in excess of the amount he may lawfully give, contribute, expend, or promise under the laws of the State of his residence; with a proviso that in the case of a candidate for Representative the amount shall not exceed $5,000, and in the case of a candidate for Senator shall not exceed $10,000, in any campaign for nomination and election; and a further proviso that any assessment, fee, or charge made or levied upon candidates by the laws of the State, or moneys expended for the candidate's necessary personal expenses for travel and subsistence, stationery and postage, writing or printing (other than in newspapers), and distributing letters, circulars, and posters, and for telegraph and telephone service, shall not be regarded as an expenditure or considered as a part of the sum fixed as the limit of expense. Section 10 of the act (36 Stat. 824), renumbered as § 11 by the amendment (37 Stat. 26), prescribes fine or imprisonment for a willful violation of any of its provisions. The act and amendment were passed before the adoption of the Seventeenth Amendment, providing for the election of Senators by direct vote of the people (declared adopted May 31, 1913; 38 Stat. 2049); but it is clear—indeed undisputed—that, for present purposes, they are to receive the same construction and effect as if enacted after adoption of the Amendment.

The present case arose out of a campaign for nomination and election of a Senator in the State of Michigan, where a statute (Act No. 109, § 1, Mich. Pub. Acts, 1913) limits the amount of money that may be paid, and of

expenses that may be authorized or incurred by or on behalf of any candidate to be paid by him in order to secure his nomination to any public office in the State, to 25 per centum of one year's salary of the office, and imposes a similar limit upon expenditures by or on behalf of any candidate who has received the nomination. By § 19 of the same statute "public office" is made to apply to any national office filled by the voters of the State, as well as to the office of presidential elector and United States Senator. The acts of Congress, in connection with the statute of the State, limit the amount that a candidate for Senator of the United States may give, contribute, expend, use, or promise, or cause to be given, contributed, expended, used, or promised, in procuring his nomination and election, to $3,750 in the aggregate, aside from those expenditures that are specifically permitted without limit.

Plaintiffs in error were indicted and convicted in the United States District Court for a conspiracy (§ 37, Criminal Code) to commit an offense against the United States, to wit, the offense, on the part of Truman H. Newberry, of willfully violating the acts of Congress above referred to by giving, contributing, expending, and using, and by causing to be given, contributed, expended, and used, in procuring his nomination and election as Senator of the United States at the primary and general elections in the year 1918, a sum in excess of the amount thus limited, to wit, the sum of $100,000, and on the part of the other defendants of aiding, counseling, inducing, and procuring (§ 332, Criminal Code) said Truman H. Newberry so to give, contribute, expend, and use, and cause to be given, contributed, expended, and used said large sums of money in excess of the amounts permitted, etc.; no part of which money was to be expended for any of the purposes specifically permitted without limit; numerous overt acts being alleged to have been done by one

or more parties defendant to effect the object of the conspiracy.

The averments of the indictment and the evidence at the trial related especially to expenditures contemplated to be made, and in fact made, to bring about Mr. Newberry's selection at a nominating or primary election held in August, 1918, with only minor expenditures made after that date and in contemplation of the general election which was held in the following November. The case is brought to this court by direct writ of error, upon the fundamental contention that the acts of Congress, in so far as they assume to regulate primary elections and limit the expenditures of money that may be made or caused to be made by a candidate therein, are in excess of the power conferred upon Congress to regulate the "manner of holding elections for Senators and Representatives" by § 4 of Article I of the Constitution of the United States. This question was raised, but not decided, in *United States* v. *Gradwell*, 243 U. S. 476, 487–488; *Blair* v. *United States*, 250 U. S. 273, 278–279.

For reasons to be stated below, I consider it erroneous to treat the question as dependent upon the words of the cited section alone. I will, however, first deal with that section, viewing it in connection with other provisions immediately associated with it and here quoted:

"Article I. Section 1. All legislative Powers herein granted shall be vested in a Congress of the United States, which shall consist of a Senate and House of Representatives.

"Section 2. The House of Representatives shall be composed of Members chosen every second Year by the People of the several States, and the Electors in each State shall have the Qualifications requisite for Electors of the most numerous Branch of the State Legislature

(Section 3 is superseded by the Seventeenth Amendment, which provides):

"Article XVII. The Senate of the United States shall be composed of two Senators from each State, elected by the people thereof, . . . The electors in each State shall have the qualifications requisite for electors of the most numerous branch of the State legislatures. . . ."

"Section 4. The Times, Places and Manner of holding Elections for Senators and Representatives, shall be prescribed in each State by the Legislature thereof; but the Congress may at any time by Law make or alter such Regulations, except as to the Places of chusing Senators . . . .

"Section 5. Each House shall be the Judge of the Elections, Returns and Qualifications of its own Members, . . ."

It is contended that Congress has no power to regulate the amount of money that may be expended by a candidate to secure his being named in the primary election; that the power "to regulate the manner of holding elections," etc., relates solely to the general elections where Senators or Representatives are finally chosen. Why should "the manner of holding elections" be so narrowly construed? An election is the choosing of a person by vote to fill a public office. In the nature of things it is a complex process, involving some examination of the qualifications of those from whom the choice is to be made and of those by whom it is to be made; some opportunity for the electors to consider and canvass the claims of the eligibles; and some method of narrowing the choice by eliminating candidates until one finally secures a majority, or at least a plurality, of the votes. For the process of elimination, instead of tentative elections participated in by all the electors, nominations by parties or groups of citizens have obtained in the United States from an early period. Latterly the processes of nomin-

ation have been regulated by law in many of the States, through the establishment of official primary elections. But in the essential sense, a sense that fairly comports with the object and purpose of a Constitution such as ours, which deals in broad outline with matters of substance and is remarkable for succinct and pithy modes of expression, all of the various processes above indicated fall fairly within the definition of "the manner of holding elections." This is not giving to the word "elections" a significance different from that which it bore when the Constitution was adopted, but is simply recognizing a content that of necessity always inhered in it. The nature of that instrument required, as Chief Justice Marshall pointed out in *McCulloch* v. *Maryland*, 4 Wheat. 316, 407, "that only its great outlines should be marked, its important objects designated, and the minor ingredients which compose those objects, be deduced from the nature of the objects themselves."

It is said that § 4 of Art. I does not confer a general power to regulate elections, but only to regulate "the manner of holding" them. But this can mean nothing less than the entire mode of procedure—the essence, not merely the form, of conducting the elections. The only specific grant of power over the subject contained in the Constitution is contained in that section; and the power is conferred primarily upon the legislatures of the several States, but subject to revision and modification by Congress. If the preliminary processes of such an election are to be treated as something so separate from the final choice that they are not within the power of Congress under this provision, they are for the same reason not within the power of the States, and, if there is no other grant of power, they must perforce remain wholly unregulated. For if this section of the Constitution is to be strictly construed with respect to the power granted to Congress thereunder, it must be construed with equal

strictness with respect to the power conferred upon the States; if the authority to regulate the "manner of holding elections" does not carry with it *ex vi termini* authority to regulate the preliminary election held for the purpose of proposing candidates, then the States can no more exercise authority over this than Congress can; much less an authority exclusive of that of Congress. For the election of Senators and Representatives in Congress is a federal function; whatever the States do in the matter they do under authority derived from the Constitution of the United States. The reservation contained in the Tenth Amendment cannot properly operate upon this subject in favor of the state governments; they could not reserve power over a matter that had no previous existence; hence if the power was not delegated to the United States it must be deemed to have been reserved to the people, and would require a constitutional amendment to bring it into play—a deplorable result of strict construction.

But if I am wrong in this, and the power to regulate primary elections could be deemed to have been reserved by the States to the exclusion of Congress, the result would be to leave the general Government destitute of the means to insure its own preservation without governmental aid from the States, which they might either grant or withhold according to their own will. This would render the Government of the United States something less than supreme in the exercise of its own appropriate powers; a doctrine supposed to have been laid at rest forever by the decisions of this court in *McCulloch* v. *Maryland*, 4 Wheat. 316, 405, *et seq.*; *Cohens* v. *Virginia*. 6 Wheat. 264, 381, 387, 414; and many other decisions in the time of Chief Justice Marshall and since.

But why should the primary election (or nominating convention) and the final election be treated as things so separate and apart as not to be both included in § 4 of

Article I? The former has no reason for existence, no function to perform, except as a preparation for the latter; and the latter has been found by experience in many States impossible of orderly and successful accomplishment without the former.

Why should this provision of the Constitution—so vital to the very structure of the Government—be so narrowly construed? It is said primaries were unknown when the Constitution was adopted. So were the steam railway and the electric telegraph. But the authority of Congress to regulate commerce among the several States was extended over these instrumentalities, because it was recognized that the manner of conducting the commerce was not essential. And this court was prompt to recognize that a transportation of merchandise, incidentally interrupted for a temporary purpose, or proceeding under successive bills of lading or means of transport, some operating wholly intra-state, was none the less interstate commerce, if such commerce was the practical and essential result of all that was done. *The Daniel Ball*, 10 Wall. 557, 565; *Southern Pacific Terminal Co.* v. *Interstate Commerce Commission*, 219 U. S. 498, 526, 527; *Ohio Railroad Commission* v. *Worthington*, 225 U. S. 101, 108, 110; *United States* v. *Union Stock Yard Co.*, 226 U. S. 286, 304; *Texas & New Orleans R. R. Co.* v. *Sabine Tram Co.*, 227 U. S. 111, 124.

Why is it more difficult to recognize the integral relation of the several steps in the process of election?

Congress, by the so-called Enforcement Act of May 31, 1870, c. 114, § 20, 16 Stat. 140, 145, and the supplement approved February 28, 1871, c. 99, §§ 1, 2, 3, 4, 16 Stat. 433, 434, prescribed a variety of regulations relating to elections of members of the House of Representatives, including provisions for safeguarding the registration of voters. These were carried into the Revised Statutes as §§ 2011, 2016, 2021, 2022, 5522. They were attacked

as unconstitutional in *Ex parte Siebold*, 100 U. S. 371, and were sustained as an exertion of the authority of Congress to pass laws for regulating and superintending such elections and for securing their purity—without suggestion that the registration of voters was not, for practical purposes, a part of the election itself and subject to regulation as such. Yet, in point of causation, identification of voters is related to the election no more closely than is the naming of candidates.

It is said that if "the manner of holding elections" had been understood in a sense to include the nominating procedure, ratification of the Constitution by the state conventions could not have been secured. I do not see how this can be confidently asserted, in view of the fact that, by the very hypothesis, the conventions ratified a specific provision for regulating the only manner of holding elections with which they were familiar—dealt with the entire subject without limitation. Mr. Justice Story, in rehearsing the objections, and the reasoning by which they were met, with citations from the debates and from the Federalist, refers to no objection that would be more cogent, supposing the regulation were extended to nominating procedure, than it would be if the regulation were confined to the ultimate election. Story Const., §§ 814–827. The sufficient answer to all objections was found in Hamilton's "plain proposition, that *every government ought to contain in itself the means of its own preservation.*" Federalist, No. 59.

What was said, in No. 60 of the Federalist, about the authority of the national government being *restricted* to the regulation of the times, the places, and the manner of elections, was in answer to a criticism that the national power over the subject "might be employed in such a manner as to promote the election of some favorite class of men in exclusion of others," as by discriminating "between the different departments of industry, or between

the different kinds of property, or between the different degrees of property"; or by a leaning "in favor of the landed interest, or the moneyed interest, or the mercantile interest, or the manufacturing interest"; and it was to support his contention that there was "no method of securing to the rich the preference apprehended, but by prescribing qualifications of property either for those who may elect, or be elected," which formed no part of the power to be conferred upon the national government, that Hamilton proceeded to say that its authority would be "expressly restricted to the regulation of the *times*, the *places*, and the *manner* of elections." This authority would be as much restricted, in the sense there intended, if "the manner of elections" were construed to include all the processes of election from first to last. The restriction arose from the express qualifications prescribed for members of House and Senate, and for those who were to choose them; subject to which all regulation of preliminary, as well as of final, steps in the election necessarily would have to proceed.

In support of a narrow construction of the power of Congress to regulate "the manner of elections" of its membership, it is said there is a check against corruption and kindred evils affecting the nominating procedure, in the authority of each House to judge of the elections, returns, and qualifications of its own members; the suggestion being that if—to take a clear case—it appeared that one chosen to the Senate had secured his election through bribery and corruption at the nominating primary, he might be refused admittance. Obviously, this amounts to a concession that the primary and the definitive election, whose legal separateness is insisted upon, are essentially but parts of a single process; else how could the conduct of a candidate with reference to the primary have legitimate bearing upon the question of his election as Senator? But the suggestion involves a fundamental

error of reasoning. The power to judge of the elections and qualifications of its members, inhering in each House by virtue of § 5 of Art. I, is an important power, essential in our system to the proper organization of an elective body of representatives. But it is a power to *judge*, to determine upon reasonable consideration of pertinent matters of fact according to established principles and rules of law; not to pass an arbitrary edict of exclusion. And I am unable to see how, in right reason, it can be held that one of the Houses of Congress, in the just exercise of its power, may exclude an elected member for securing by bribery his nomination at the primary, if the regulation by law of his conduct at the primary is beyond the constitutional power of Congress itself. Moreover, the power of each House, even if it might rightfully be applied to exclude a member in the case suggested, is not an adequate check upon bribery, corruption, and other irregularities in the primary elections. It can impose no penal consequences upon the offender; when affirmatively exercised it leaves the constituency for the time without proper representation; it may exclude one improperly elected, but furnishes no rule for the future by which the selection of a fit representative may be assured; and it is exerted at the will of but a single House, not by Congress as a law-making body.

But if I am wrong thus far—if the word "elections" in Art. I, § 4, of the Constitution must be narrowly confined to the single and definitive step described as an election at the time that instrument was adopted—nevertheless it seems to me too clear for discussion that primary elections and nominating conventions are so closely related to the final election, and their proper regulation so essential to effective regulation of the latter, so vital to representative government, that power to regulate them is within the general authority of Congress. It is matter of common knowledge that the great mass of

the American electorate is grouped into political parties, to one or the other of which voters adhere with tenacity, due to their divergent views on questions of public policy, their interests, their environment, and various other influences, sentimental and historical. So strong with the great majority of voters are party associations, so potent the party slogan, so effective the party organization, that the likelihood of a candidate succeeding in an election without a party nomination is practically negligible. As a result, every voter comes to the polls on the day of the general election confined in his choice to those few candidates who have received party nominations, and constrained to consider their eligibility, in point of personal fitness, as affected by their party associations and their obligation to pursue more or less definite lines of policy, with which the voter may or may not agree. As a practical matter, the ultimate choice of the mass of voters is predetermined when the nominations have been made. Hence, the authority of Congress to regulate the primary elections and nominating conventions arises, of necessity, not from any indefinite or implied grant of power, but from one clearly expressed in the Constitution itself (Art. I, § 8, cl. 18)—"To make all Laws which shall be necessary and proper for carrying into Execution the foregoing Powers, and all other Powers vested by this Constitution in the Government of the United States, or in any Department or Officer thereof." This is the power preservative of all others, and essential for adding vitality to the framework of the Government. Among the primary powers to be carried into effect is the power to legislate through a Congress consisting of a Senate and House of Representatives chosen by the people—in short, the power to maintain a law-making body representative in its character. Another is the specific power to regulate the "manner of holding elections for Senators and Representatives," conferred by § 4 of the first Article; and if this does not in

literal terms extend to nominating proceedings intimately related to the election itself, it certainly does not in terms or by implication exclude federal control of those proceedings. From a grant to the States of power to regulate the principal matter, expressly made subject to revision and alteration by the Congress, it is impossible to imply a grant to the States of regulatory authority over accessory matters exclusive of the Congress. And it is obvious that if clause 18 adds nothing to the content of the other express powers, when these are literally interpreted, it has no efficacy whatever and must be treated as surplusage. It has not, heretofore, been so regarded. The subject was exhaustively treated by Chief Justice Marshall, speaking for the court in the great case already referred to, *McCulloch* v. *Maryland*, 4 Wheat. 316, 411–424, where he pointed out, pp. 419, 420: "1st. The clause is placed among the powers of Congress, not among the limitations on those powers. 2nd. Its terms purport to enlarge, not to diminish the powers vested in the government. It purports to be an additional power, not a restriction on those already granted." According to the conclusive reasoning adopted in that case, whatever meaning may be attributed to § 4 of Art. I, there is added by clause 18 of § 8 everything necessary or proper for carrying it into execution—which means, into practical and complete effect.

The passage of the act under consideration amounts to a determination by the law-making body that the regulation of primary elections and nominating conventions is necessary if the Senate and House of Representatives are to be, in a full and proper sense, representative of the people. Not only is this true of those cases referred to in the report of the Senate Committee (Senate Rept. No. 78, 62d Cong., 1st sess., p. 2) where the parties are so unequally divided that a nomination by the majority party is equivalent to election; but it is true in every case

to the extent that the nominating processes virtually eliminate from consideration by the electors all eligible candidates except the few—two or three, perhaps—who succeed in receiving party nominations. Sinister influences exerted upon the primaries inevitably have their effect upon the ultimate election—are employed for no other reason. To safeguard the final elections while leaving the proceedings for proposing candidates unregulated, is to postpone regulation until it is comparatively futile. And Congress might well conclude that, if the nominating procedure were to be left open to fraud, bribery, and corruption, or subject to the more insidious but (in the opinion of Congress) nevertheless harmful influences resulting from an unlimited expenditure of money in paid propaganda and other purchased campaign activities, representative government would be endangered.

The question of the authority of Congress to determine that laws regulating primary elections are "necessary and proper for carrying into execution" the other powers specified, admits of but one answer—the same given by Chief Justice Marshall in the memorable case last cited (4 Wheat. 421): "We think the sound construction of the Constitution must allow to the national legislature that discretion, with respect to the means by which the powers it confers are to be carried into execution, which will enable that body to perform the high duties assigned to it, in the manner most beneficial to the people. *Let the end be legitimate, let it be within the scope of the Constitution, and all means which are appropriate, which are plainly adapted to that end, which are not prohibited, but consist with the letter and spirit of the Constitution, are constitutional.*"

This principle has been consistently adhered to and liberally applied from that day until this. Among a multitude of illustrative cases that might be cited, some

recent notable, but not exceptional, ones may be instanced: *Second Employers' Liability Cases*, 223 U. S. 1, 49, holding that the power of Congress to regulate commerce among the States brings within its authority the relations between common carriers by rail and their employees engaged in such commerce; *Houston, East & West Texas Ry. Co.* v. *United States*, 234 U. S. 342, 350, 355, holding that the same power authorizes Congress to regulate rates of transportation in the internal commerce of a State, to the extent of preventing injurious discrimination against the movement of traffic from State to State; *Wilson* v. *New*, 243 U. S. 332, 353, holding that the power over interstate commerce extends to regulating the wages of the employees of common carriers engaged therein; *Selective Draft Law Cases*, 245 U. S. 366, 377, *et seq.*, sustaining an act imposing involuntary military duty upon the citizen as "necessary and proper for carrying into execution" the power to declare war, raise and support armies, and make rules for the government and regulation of the land and naval forces; *United States* v. *Ferger*, 250 U. S. 199, 205, upholding the authority of Congress to prohibit and punish the fraudulent making of spurious interstate bills of lading even in the absence of any actual or contemplated movement of commerce from State to State; *Hamilton* v. *Kentucky Distilleries Co.*, 251 U. S. 146, 155, 163, sustaining war time prohibition of the sale of distilled spirits for beverage purposes as a measure necessary and proper for carrying into execution the war power; *Jacob Ruppert* v. *Caffey*, 251 U. S. 264, 282, 299–301, sustaining an act prohibiting the manufacture and sale of non-intoxicating beer as "necessary and proper" to render effective a prohibition against intoxicants; *First National Bank* v. *Union Trust Co.*, 244 U. S. 416, 419, sustaining an act conferring upon national banks powers not inherently federal but deemed appropriate to enable such banks to compete with state banks having

like powers; and *Smith* v. *Kansas City Title & Trust Co.*, 255 U. S. 180, sustaining an act establishing federal land banks and joint stock land banks having broad powers not national in their character, but deemed by Congress to be reasonably appropriate for performing certain limited fiscal functions in aid of the national treasury.

It would be tragic if that provision of the Constitution which has proved the sure defense of every outpost of national power should fail to safeguard the very foundation of the citadel.

But its function in preserving our representative government has long been recognized. In *Ex parte Yarbrough*, 110 U. S. 651, where the question was as to the constitutionality of §§ 5508 and 5520, Rev. Stats.—the question having arisen upon an indictment for a conspiracy to intimidate a citizen of African descent in the exercise of his right to vote for a member of Congress—the court, by Mr. Justice Miller, said (p. 657): "That a government whose essential character is republican, whose executive head and legislative body are both elective, whose most numerous and powerful branch of the legislature is elected by the people directly [now true of both branches], has no power by appropriate laws to secure this election from the influence of violence, of corruption, and of fraud, is a proposition so startling as to arrest attention and demand the gravest consideration. If this government is anything more than a mere aggregation of delegated agents of other States and governments, each of which is superior to the general government, it must have the power to protect the elections on which its existence depends from violence and corruption. If it has not this power it is left helpless before the two great natural and historical enemies of all republics, open violence and insidious corruption. The proposition that it has no such power is supported by the old argument, often heard, often repeated, and in this court never assented to, that

when a question of the power of Congress arises the advocate of the power must be able to place his finger on words which expressly grant it. . . . It destroys at one blow, in construing the Constitution of the United States, the doctrine universally applied to all instruments of writing, that what is implied is as much a part of the instrument as what is expressed. This principle, in its application to the Constitution of the United States, more than to almost any other writing, is a necessity, by reason of the inherent inability to put into words all derivative powers—a difficulty which the instrument itself recognizes by conferring on Congress the authority to pass all laws necessary and proper to carry into execution the powers expressly granted and all other powers vested in the government or any branch of it by the Constitution. Article I, sec. 8, clause 18."

I conclude that it is free from doubt that the Congress has power under the Constitution to regulate the conduct of primary elections and nominating conventions held for choosing candidates to be voted for in general elections for Representatives and Senators in Congress, and that the provisions of the Act of August 19, 1911, 37 Stat. 26–28, in that behalf are valid.

Since the majority of the court hold that the act is invalid, it would serve no useful purpose to spend time in discussing those assignments of error that relate to the conduct of the trial. It may be said, however, that, in my opinion, the trial court did not err in refusing to direct a verdict for the defendants for want of evidence of the alleged conspiracy; nor in instructing the jury that the prohibition of the statute against the expenditure and use of money by a candidate beyond the specified limit is not confined to his own money, but extends to the expenditure or use of excessive sums of money by him, from whatever source and from whomsoever derived; nor in instructing them that in order to warrant a ver-

dict of guilty upon an indictment for conspiracy it was not necessary that the Government should show that defendants knew that some statute forbade the acts they were contemplating, but only to show an agreement to do acts constituting a violation of the statute; their knowledge of the law being presumed.

I find prejudicial error, however, in that part of the charge which assumed to define the extent to which a candidate must participate in expenditures beyond the amount limited in order that he may be held to have violated the prohibition—an instruction vitally important because it was largely upon overt acts supposed to have been done in carrying out the alleged conspiracy that the Government relied to prove the making of the conspiracy and its character, and because, unless the purposes of defendants involved a violation of the Corrupt Practices Act, they were not guilty of a conspiracy to commit an "offense against the United States" within the meaning of § 37, Criminal Code.

The instruction upon this topic, excepted to and assigned for error, was as follows: "The phrase which constitutes the prohibition against the candidate 'Causing to be given, contributed, expended or used' excessive sums of money, is not limited and not confined to expenditures and use of money made directly and personally by himself. This prohibition extends to the expenditure and use of excessive sums of money in which the candidate actively participates, or assists, or advises, or directs, or induces, or procures. The prohibition extends not only to the expenditure and use of excessive sums of money by the candidate directly and personally, but to such use and expenditure through his agency, or procurement, or assistance. To constitute a violation of this statute knowledge of the expenditure and use of excessive sums of money on the part of the candidate is not sufficient; neither is it sufficient to constitute a violation of this

statute that the candidate merely acquiesces in such expenditures and use. But it is sufficient to constitute a violation of this statute if the candidate actively participates in doing the things which occasion such expenditures and use of money and so actively participates with knowledge that the money is being expended and used. To apply these rules to this case: If you are satisfied from the evidence that the defendant, Truman H. Newberry, at or about the time that he became a candidate for United States Senator was informed and knew that his compaign for the nomination and election would require the expenditure and use of more money than is permitted by law and with such knowledge became a candidate, and thereafter by advice, by conduct, by his acts, by his direction, by his counsel, or by his procurement he actively participated and took part in the expenditure and use of an excessive sum of money, of an unlawful sum of money, you will be warranted in finding that he did violate this statute known as the Corrupt Practices Act."

However this may be regarded when considered in the abstract, the difficulty with it, when viewed in connection with the evidence in the case to which the jury was called upon to apply it, is that it permitted and perhaps encouraged the jury to find the defendants guilty of a conspiracy to violate the Corrupt Practices Act if they merely contemplated a campaign requiring the expenditure of money beyond the statutory limit, even though Mr. Newberry, the candidate, had not, and it was not contemplated that he should have, any part in causing or procuring such expenditure beyond his mere standing voluntarily as a candidate and participating in the campaign with knowledge that moneys contributed and expended by others without his participation were to be expended.

The language of the Corrupt Practices Act (37 Stat. 28) is: "No candidate . . . shall give, contribute, ex-

pend, use, or promise, or cause to be given, contributed, expended, used, or promised," etc. A reading of the entire act makes it plain that Congress did not intend to limit spontaneous contributions of money by others than a candidate, nor expenditures of such money except as he should participate therein. Of course, it does not mean that he must be alone in expending or causing to be expended the excessive sums of money; if he does it through an agent or agents, or through associates who stand in the position of agents, no doubt he is guilty; *qui facit per alium facit per se;* but unless he is an offender as a principal there is no offense. Section 332, Criminal Code, declares: "Whoever directly commits any act constituting an offense defined in any law of the United States, or aids, abets, counsels, commands, induces, or procures its commission, is a principal." Clearly this makes anyone who abets a candidate in expending or causing to be expended excessive sums a principal offender; but it cannot change the definition of the offense itself as contained in the Corrupt Practices Act, so as to make a candidate a principal offender unless he directly commits the offense denounced. Spontaneous expenditures by others being without the scope of the prohibition, neither he nor anybody else can be held criminally responsible for merely abetting such expenditures.

It follows that one's entry upon a candidacy for nomination and election as a Senator with knowledge that such candidacy will come to naught unless supported by expenditure of money beyond the specified limit, is not within the inhibition of the act unless it is contemplated that the candidate shall have a part in procuring the excessive expenditures beyond the effect of his mere candidacy in evoking spontaneous contributions and expenditures by his supporters; and that his remaining in the field and participating in the ordinary activities of the campaign with knowledge that such activities furnish in

a general sense the "occasion" for the expenditure is not to be regarded as a "causing" by the candidate of such expenditure within the meaning of the statute.

The state of the evidence made it important that, in connection with that portion of the charge above quoted, the jury should be cautioned that unless it was a part of defendants' plan that Mr. Newberry should actually participate in giving, contributing, expending, using, or promising, or causing to be given, contributed, expended, used, or promised moneys in excess of the limited amount —either himself or through others as his agents—his mere participation in the activities of the campaign, even with knowledge that moneys spontaneously contributed and expended by others, without his agency, procurement, or assistance, were to be or were being expended, would not of itself amount to his causing such excessive expenditure. The effect of the instruction that was given may well have been to convey to the jury the view that Mr. Newberry's conduct in becoming and remaining a candidate with knowledge that spontaneous contributions and expenditures of money by his supporters would exceed the statutory limit, and his active participation in the campaign, were necessarily equivalent to an active participation by him in causing the expenditure and use of an excessive sum of money, and that a combination among defendants having for its object Mr. Newberry's participation in a campaign where money in excess of the prescribed limit was to be expended, even without his participation in the contribution or expenditure of such money, amounted to a conspiracy on their part to commit an offense against the act.

For error in the instructions in this particular the judgment should be reversed, with directions for a new trial.

MR. JUSTICE BRANDEIS and MR. JUSTICE CLARKE concur in this opinion.

PEOPLE OF THE STATE OF NEW YORK *v.* STATE OF NEW JERSEY AND PASSAIC VALLEY SEWERAGE COMMISSIONERS.

IN EQUITY.

No. 2, Original. Argued November 8, 11, 12, 1918; restored to docket for further argument March 10, 1919; reargued January 25, 1921.—Decided May 2, 1921.

New York brought this suit against New Jersey and the Passaic Valley Sewerage Commissioners, to enjoin the execution of a project to convey the sewage of the Passaic Valley through a sewer system and to discharge it into a part of New York Harbor, known as the Upper New York Bay, the plaintiff alleging that the sewage would be carried by the currents and tides into the Hudson and East Rivers and be deposited on the bottom and shores of the Bay and upon and adjacent to the wharves and docks of New York City, and would so pollute the water as to render it a public nuisance, offensive and injurious to persons living near it or using it for bathing or for purposes of commerce, damaging to vessels using the waters, and so poisonous to fish and oysters in it as to render them unfit for food. The United States intervening opposed the plan as threatening, unnecessarily, obstruction of navigable channels, injury to the health of persons navigating the waters and of officials and employees at a navy yard, and damage to government property bordering on the Bay; but withdrew, without prejudice, upon the filing of a stipulation executed by its Attorney General, and by the defendant sewer commissioners acting under authority of an act of the New Jersey legislature, agreeing upon a modification of the method proposed for purifying and dispersing the sewage, specifying the results that must be secured thereby or through requisite additional lawful arrangements, allowing the Government full opportunity to inspect the workings of the sewer system and providing that compliance with the stipulation should be made a condition of any permit issued by the Government for construction, maintenance or operation. The case having proceeded to final hearing between the original parties,—

Held: (1) That the right of New York to maintain such a suit on behalf of her citizens was clear, without regard to the precise lo-

cation of the boundary between the two States or to New York's claim of jurisdiction over the waters of New York Bay. P. 301.

(2) That the defendant Sewerage Commissioners constituted a statutory, corporate agency of New Jersey, whose acts and intentions in the premises must be treated as those of the State. P. 302.

(3) That, if the conditions of the stipulation were realized and maintained, there could be no occasion for the injunction prayed for. P. 305.

(4) That the stipulation was binding on New Jersey and the United States. P. 307.

(5) That the evidence must be considered subject to the principle that, before this court will exercise its extraordinary power to control the conduct of one State at the suit of another, the threatened invasion of rights must be of serious magnitude and established by clear and convincing evidence. P. 309.

(6) That the evidence failed to prove that the proposed addition of sewage would cause increased damage to hulls of vessels or danger of air-borne disease to persons navigating or dwelling along the water, or (if treated as proposed in the stipulation) damage to persons bathing, or fish or oysters subsisting, in the water, additional to that attributable to existing discharge of sewage from New York City and its environs. P. 309.

(7) That, as to the question remaining, the evidence failed to show with the requisite certainty, that, even if treated only as specifically prescribed in the stipulation, the additional sewage would create a public nuisance by causing offensive odors, or unsightly deposits on the surface, or seriously add to the existing pollution; and that, therefore, and in view of improved methods of sewage treatment disclosed by the testimony and of the right of the Government to stop the operation of the sewer if it caused pollution of the Bay, the injunction must be refused. P. 310.

The court suggests that the problem involved in this case is one more likely to be wisely solved by coöperative study and by conference and mutual concession on the part of the States interested than by proceedings in any court. P. 313.

Bill dismissed without prejudice.

THIS original case was first argued at the October Term of 1918, but, owing in part to the time that had then elapsed since the closing of the evidence, the court found it necessary to direct the taking of additional testimony on certain specified points. See 249 U. S. 202. The

facts are reviewed in the opinion. No attempt is made to reproduce the arguments which were mainly concerned with the matters of fact involved.

Mr. Charles E. Hughes, with whom *Mr. Charles D. Newton*, Attorney General of the State of New York, *Mr. William J. O'Sullivan*, *Mr. Russell Lord Tarbox* and *Mr. Allen S. Hubbard* were on the brief, for complainant.[1]

Mr. Adrian Riker and *Mr. George W. Wickersham*, with whom *Mr. Thomas F. McCran*, Attorney General of the State of New Jersey, and *Mr. Robert H. McCarter* were on the brief, for defendants.[1]

MR. JUSTICE CLARKE delivered the opinion of the court.

The People of the State of New York, in their bill filed in this suit, pray that the defendants, the State of New Jersey and the Passaic Valley Sewerage Commissioners, be permanently enjoined from discharging, as it is averred they intend to discharge, a large volume of sewage into that part of New York Harbor known as the Upper Bay, for the reason, as it is alleged, that such pollution of the waters of the harbor will be caused thereby as to amount to a public nuisance, which will result in grave injury to the health, to the property, and to the commercial welfare, of the people of the State and City of New York.

The Passaic River rises in the northeasterly part of

[1] At the first hearing, the case was argued by *Mr. Charles E. Hughes* on behalf of the complainant. *Mr. Merton E. Lewis*, Attorney General of the State of New York, and *Mr. William J. O'Sullivan* were on the brief. *Mr. Adrian Riker* and *Mr. Robert H. McCarter* argued on behalf of the defendants. *Mr. John W. Wescott*, Attorney General of the State of New Jersey, was on the brief.

New Jersey and empties into Newark Bay. High land separates its watershed from direct drainage into the Hudson River or New York Bay, and on the lower twenty-five miles of it there are located the cities of Paterson, Passaic, and Newark, and also a number of such large towns that the population upon and near to the river is treated throughout the record as approximately 700,000 in 1911, when it was thought the sewer would be completed, and as likely to be about 1,650,000 in 1940, to which year it was designed to furnish adequate sewerage capacity. These cities and towns, from their earliest settlement, had all drained their sewage into the river. The ebbing and flowing of the tide almost to Paterson delayed the escaping of this sewage from the river and resulted in the water becoming greatly polluted. This polluted water was emptied directly into Newark Bay, but, ultimately, 84% of it, modified, no doubt, by nature's agencies, but still polluted, found its way through the natural channel of Kill van Kull, into Upper New York Bay.

This drainage of sewage into the Passaic River resulted in the stream becoming such a menace to the health and property of the adjacent communities that, in 1896, a commission was appointed by the Governor of New Jersey, under the provisions of an act of the legislature, to study the problem presented, for the purpose of devising some system of sewage disposal which would afford relief. After this commission had reported, a second commission of investigation was provided for by act of the legislature in 1897, and its report was followed by a third similar commission in 1898.

The reports of these various commissions led, in 1902, to an act of the New Jersey legislature creating the Passaic Valley Sewerage District, with boundaries embracing substantially the entire watershed of the Passaic River, and to another act, in 1907, prohibiting the dis-

charge of sewage into the river after a date named, and directing the defendant Passaic Valley Sewerage Commissioners to prepare plans and specifications for a trunk sewer to dispose of the sewage and authorizing municipalities to contract with them for the service which they might require.

Under authority of this act, the defendant Sewerage Commissioners, in April, 1908, adopted a plan for sewage disposal, which provided for a main intercepting sewer, extending from the City of Paterson, along the right bank of the Passaic River, to a point in the City of Newark, and thence by a tunnel under the waters of Newark Bay and the cities of Bayonne and Jersey City to a point in Upper New York Bay about 500 feet north of Robbins Reef Light, where it was proposed to discharge the sewage at a depth of 40 feet of water below mean low tide. The estimated cost of the proposed sewer was $12,250,000.

It was provided in the act authorizing the construction of the sewer that, before any work should be undertaken or obligations incurred, a further investigation should be made by the Commissioners as to whether the discharge of the sewage into New York Bay would be likely to pollute its waters to such an extent as to cause a nuisance to persons or property within the State of New York, and that the result of such investigation, with the reasons for it, should be presented to the Governor of the State.

Such an investigation was made and upon report of the Commissioners the Governor concluded that the discharge of the sewage as proposed would not pollute the waters of New York Bay so as to cause a nuisance to either persons or property within the State of New York, and the Attorney General of the State also advised the Governor that in his opinion the State of New York could not have any valid legal objection to the use of the sewer as proposed.

There can be no doubt that the various commissioners

who investigated this subject were men of the highest character and intelligence and that they studied it with the aid of the best obtainable sanitary engineers, chemists and bacteriologists, for the purpose of arriving at a solution which would protect and preserve the interests of all of the great communities involved. It is equally beyond doubt that the Governor and other officials of New Jersey, with full appreciation of the magnitude and seriousness of the undertaking, proceeded with great caution and with a settled purpose to fully respect the rights of the people of the State of New York.

Learning of the plans of the State of New Jersey, thus detailed, the legislature of New York passed an act providing for a commission to investigate the probable effect upon the waters of New York Bay of the proposed Passaic Valley sewer, with power to coöperate with the authorities of New Jersey with a view to arriving at some mutually satisfactory solution of the problem. The record shows that various conferences were held between the New York Commission thus created and the Passaic Valley Sewerage Commissioners, but for some reason, which does not clearly appear, no mutually satisfactory course of action was arrived at, with the result that, in October, 1908, this suit for an injunction was commenced.

For the purpose of showing its right to maintain the suit, the bill thus filed sets out, with much detail, an agreement between the States of New York and New Jersey, approved by Congress in 1834, establishing the boundary line between the two States and giving to New York, to the extent therein written, exclusive jurisdiction over the waters of the Bay of New York.

But we need not inquire curiously as to the rights of the State of New York derived from this compact, for, wholly aside from it, and regardless of the precise location of the boundary line, the right of the State to maintain such a suit as is stated in the bill is very clear. The health,

comfort and prosperity of the people of the State and the value of their property being gravely menaced, as it is averred that they are by the proposed action of the defendants, the State is the proper party to represent and defend such rights by resort to the remedy of an original suit in this court under the provisions of the Constitution of the United States. *Missouri* v. *Illinois*, 180 U. S. 208, 241, 243; *Georgia* v. *Tennessee Copper Co.*, 206 U. S. 230.

Also, for the purpose of showing the responsibility of the State of New Jersey for the proposed action of the defendant, the Passaic Valley Sewerage Commissioners, the bill sets out, with much detail, the acts of the legislature of that State authorising and directing such action on their part.

Of this it is sufficient to say that the averments of the bill, quite undenied, show that the defendant sewerage commissioners constitute such a statutory, corporate agency of the State that their action, actual or intended, must be treated as that of the State itself, and we shall so regard it. 180 U. S. 208, *supra*.

The remaining essential allegations of the bill are that the defendants are about to construct the sewer we have described and to discharge the sewage thereby collected into the Upper New York Bay, through a single opening 12 feet in diameter, at a point about half a mile north of Robbins Reef Light; that there would be about 120 millions of gallons of such sewage discharged into the Bay every 24 hours in 1911, and in excess of 357 millions of gallons by 1940; that such sewage would be carried by the currents and tides into the Hudson and East Rivers and would be deposited on the bottom and shores of the Bay and upon and adjacent to the wharves and docks of New York City, thereby so polluting the water as to render it: a public nuisance offensive and injurious to persons living near it or using it for bathing or for purposes of commerce, damaging to vessels using the waters, and

so poisonous to the fish and oysters subsisting within it as to render them unfit for food. To prevent the public nuisance, which it is averred would thus be created, a permanent injunction was prayed for.

The essential denials and allegations of the answer are as follows:

Admitting their intention to construct the sewer substantially as described, it is averred: that New Jersey has a shore line of 25 miles on New York Bay and on the Hudson River, and that large cities and towns of that State border upon the Bay, so that it has as important an interest as New York has in maintaining the waters free from pollution; that the sewer project objected to was authorized only after it had been recommended and approved by sanitary engineers of highest professional standing and experience and upon their assurance, after careful study of the tidal flow and currents of the Bay, that appreciable pollution would not be caused thereby; that the Passaic River empties into Newark Bay and its water, charged, under existing conditions, with the sewage collected from the same communities intended to be served by the projected sewer, in large part reaches New York Bay in the vicinity of Robbins Reef Light, by natural channels, without causing substantial injury to the water; and that the City of New York has long been discharging into the Bay at or near to the shore lines thereof, daily, more than seven times as great a volume of sewage (entirely untreated) as the daily discharge of the proposed sewer would be for many years to come. The answer concludes with further denials that the waters of the Bay would be corrupted or their usefulness impaired by the use of the proposed intercepting sewer.

After the defendants had answered, the Government of the United States, by leave of court, filed a Petition of Intervention. The warrant assigned for this intervention was, the power and duty of the Government with respect

to navigation and interstate commerce, and the inherent power which it has to act for the protection of the health of government officials and employees at the Brooklyn navy yard, and its duty to protect from damage the Government property bordering upon New York Bay.

The projected sewer was described in this Petition of Intervention, substantially as in the original bill, but it was averred that the plans for the removal of solids from the sewage were so indefinite and inadequate that the use of the sewer would result in the obstruction of navigation by the filling up and shoaling of the channels of the Bay, and that the proposed purification of the sewage was so insufficient that the waters would be rendered unsightly and unhealthful to persons using them for commerce or dwelling upon the adjacent shores. It was averred that there were other, better and more advanced methods of sewage disposal than those proposed, and that the threatened injury to commerce and navigation, to the public health and to the property of the United States was not necessary. For these reasons the Government joined in the prayer for relief.

The coming of the Government into the case was followed by conferences between its officials and the Sewerage Commissioners, with the result that a method of treatment of the sewage was decided upon much more thorough, comprehensive and definite in character than had been adopted before and the manner of dispersion of it at the outlet was so changed as to secure a much greater diffusion, at a great depth in the adjacent waters.

These changes were ultimately embodied in a stipulation between the United States, acting through its Attorney General, and the Passaic Valley Sewerage Commissioners, acting under authority of a special act of the New Jersey legislature. It was agreed that upon the filing of this stipulation, properly executed, with the

Clerk of this Court, the Petition of Intervention of the Government should be dismissed, without prejudice—which was done on May 16, 1910.

The stipulation provides, with much detail, that at or near to a pumping station to be located in the Newark Meadows, near Newark Bay, the material coming from the trunk sewer shall first pass through coarse screens to remove floating matter; then through a grit basin or basins, to remove heavy matter, as far as practicable; then through self-cleaning mechanical screens, with openings of not over four-tenths of an inch; and then through sedimentation basins, equipped with "scum boards," at a prescribed velocity of flow. It is provided that the effluent thus screened and settled shall flow into a pumping well, whence it is to be pumped under pressure to a point near Robins Reef Light, where it is to be discharged at a depth of not less than forty feet beneath the surface of the water at mean low tide, through 150 outlets, distributed over an area of three and one-half acres, and so arranged as to drive the material horizontally across the tidal currents.

The terms of this stipulation were adopted by the Government under the advice of Army engineers of high rank and by the Sewerage Commissioners on the advice of distinguished sanitary engineers and it must be accepted as established by the testimony taken in 1919 that at that time screening and sedimentation and thorough dispersion in water through deeply submerged multiple outlets was regarded by the most competent authorities as the most approved method of disposing of sewage in large volume.

But, not satisfied with providing what was thought sufficient treatment to render the sewage innocuous, there was incorporated into the stipulation an agreement on the part of the Sewerage Commissioners that in the actual operation of the sewer at all times the following

results should be secured, either through compliance with the requirements of the stipulation for treatment of the sewage, "or through requisite lawful additional arrangements," viz: (1) There will be absence in the New York Bay of visible suspended particles coming from this sewage; (2) there will be absence of deposits caused by it objectionable to the Secretary of War of the United States; (3) there will be absence of odors due to the putrefaction of organic matter contained in the sewage; (4) there will be absence on the surface of the Bay of any grease or color due to the sewage; (5) there will be no injury to the public health due to the discharge of the sewage, and no public or private nuisance will be created thereby; (6) no injurious effect shall result to the property of the United States situated upon the Bay; (7) there shall not be a reduction in the dissolved oxygen content of the waters, due to this sewage, sufficient to interfere with major fish life. It is agreed that the Government shall have unrestricted opportunity to inspect the workings of the sewer system, by designated officials, and that full compliance at all times with the provisions of the stipulation referred to shall be made an express condition of any permit issued by the Government for the construction, maintenance or operation of the projected sewer system.

It is obvious that, if the conditions of this stipulation are realized and maintained, there will be no occasion or ground for such an injunction as was prayed for.

It is argued, however, and expert witnesses have testified, that the provisions therein stipulated for screening and sedimentation and final dispersion of the sewage in the water, are not sufficient to produce the results which the Sewerage Commissioners agree with the Government to produce and maintain, and that if such results as are feared by the witnesses are produced it would be impossible to determine whether they were caused by this

particular sewage or by that coming from other sources and that therefore the agreement would, in practice, be nugatory. But equally well informed and credible witnesses testified that the proposed treatment would produce the stipulated results and that the source of such pollution, if any should be caused by the Passaic sewage, could readily be traced to its origin, and we think the probabilities greatly in favor of this conclusion, having regard to the opportunity secured to the Government for inspection and observation of the treatment plant and for determining the quality and content of effluent before it is discharged into the Bay and the effect which it may have on the water in the immediate vicinity of the outlet.

It is also argued that this stipulation is not binding upon the State of New Jersey because executed only by the Sewerage Commissioners, and that it is invalid for want of power in the Attorney General to so stipulate on behalf of the United States.

But since by act of its legislature the State of New Jersey specifically authorized the Sewerage Commissioners to execute the stipulation and by its special counsel entered of record its approval of, and consent to, it, we must and do regard it as the valid obligation of the State as certainly as of the Commissioners.

As to the United States: The intervention of the Government was allowed upon allegations that the inadequate treatment of the sewage proposed would result in injury to navigation and commerce: by causing deposits of solid matter, to the extent of thousands of tons annually, which would fill up and shallow the channels of the Bay; by rendering the Port of New York less serviceable and attractive to commerce and offensive and unwholesome to persons using and living near it; and by causing injury to the hulls of vessels by the character of the effluent to be discharged. It was also averred that

practically irreparable damage would be caused to extensive properties owned by the Government adjacent to the Bay.

Having regard to the large powers of the Government over navigation and commerce, its right to protect adjacent public property and its officers and employees from damage and disease, and to the duty and authority of the Attorney General to control and conduct litigation to which the Government may be a party (Rev. Stats., §§ 359, 367), we cannot doubt that the intervention of the Government was proper in this case and that it was within the authority of the Attorney General to agree that the United States should retire from the case upon the terms stated in the stipulation, which were plainly approved by the Secretary of War, who afterwards embodied them in the construction permit issued to the Sewerage Commissioners.

Although this stipulation was filed and the Government withdrew from the case on May 16, 1910, the remaining parties went forward and took a great volume of testimony, the taking of which was concluded in June, 1913. Five years passed before the case was brought on for argument at the October Term, 1918, and upon examination this court, having regard to the long time which had elapsed since the taking of testimony was closed and to the rapid advance in sanitary science then in progress, suggested in the record, directed that additional testimony should be taken in order that the court might be advised: (1) As to any practicable modification of the proposed sewer system which might improve it and reduce any polluting effect upon the water which might be caused by the effluent to be discharged; (2) as to any practicable plan or arrangement for sewage disposal which would lessen the polluting effect derived from the New York City sewage; (3) and as to the present degree of pollution of the waters of New York Harbor

and the change in this respect since the taking of the testimony was closed.

In compliance with this order much additional testimony was taken.

With the record in this state we come to consider the evidence introduced, but subject to the rule that the burden upon the State of New York of sustaining the allegations of its bill is much greater than that imposed upon a complainant in an ordinary suit between private parties. Before this court can be moved to exercise its extraordinary power under the Constitution to control the conduct of one State at the suit of another, the threatened invasion of rights must be of serious magnitude and it must be established by clear and convincing evidence. *Missouri* v. *Illinois*, 200 U. S. 496.

The water of New York Bay is such a brackish combination of salt sea and fresh water that it could not, under any circumstances, be used for drinking or other domestic purposes and, therefore, the reasons given in the bill to justify the injunction prayed for are restricted, as we have seen, to the claims that the addition of the Passaic Valley sewage to the already polluted waters of the Bay would result, in odors offensive and unwholesome to persons bathing in them or passing over them in large vessels or in small boats or living and working upon the adjacent shores, in causing unsightly deposits on the surface of the water and chemical action injurious to the wood and metal of vessels navigating the Bay, and in rendering fish and oysters taken from such waters unfit for consumption.

The evidence introduced, as to increase of damaging chemical action upon the hulls of vessels by the proposed addition of sewage, and as to danger from air-borne diseases to persons using the water in boats and vessels or working or dwelling upon the shore of the Bay, is much too meager and indefinite to be seriously considered as

ground for an injunction, and when it is considered that for many years all of the sewage from the great population of New York City and its environs and from the large cities on the New Jersey shore (estimated, in 1912, at 900 millions of gallons daily) has been discharged into the harbor, quite untreated, the evidence does not justify the conclusion that persons bathing in or that fish or oysters subsisting in such waters can sustain much further damage from the addition to them of the sewage of the Passaic Valley, after it has been treated in the manner proposed in the stipulation with the Government.

There remains to be considered, therefore, only the offensive odors, and unsightly deposits on the surface which it is claimed will be caused by the addition of putrescible matter to the water, and it is to this claim that a large part of the evidence introduced by the complainant is directed. Much evidence was introduced tending to prove that sewage collected from so great an area as that of the Passaic Valley Sewerage District would be stale, if not septic, when it reached the treatment plant at Newark Bay and that it would, therefore, hold in solution much organic matter which would not be removed by the screening and sedimentation processes proposed, with the result that it would cause disagreeable deposits on the surface of the water—"oily and sleek fields"—and offensive odors near the place of discharge and upon the wharves and shores adjacent to the Bay.

On the other hand witnesses of seemingly equal candor and learning, and with large practical experience, called by the defendants, testified that they were confidently of the opinion that the treatment of the sewage provided for in the stipulation with the United States would cause such purification of it that the results guaranteed therein would be fully realized.

It is much to be regretted that any forecast as to what the effect would be of the treatment and deeply sub-

merged discharge through multiple outlets proposed for this large volume of sewage must depend almost entirely upon the conflicting opinions of expert witnesses, for experience with such treatment and dispersion under even approximately like conditions seems entirely wanting. It is, however, of much significance that the authorities of the City of New York, after many years of investigation of the subject of sewage disposal, in their latest plans propose to adopt a treatment of screening and sedimentation and dispersal in deep water very similar to, but not so extensive and thorough as, that provided for in the stipulation between the defendants and the United States.

There is only one point upon which all the experts called for the opposing parties agree, viz.: that in the present state of learning upon the subject the amount of dissolved oxygen in water is the best index or measure of the degree to which it is polluted by organic substances, it seemingly being accepted by them all that upon the oxygen content in water depends its capacity for digesting sewage—that is for converting organic matter into inorganic and harmless substances by direct oxidation and by sustaining bacteria which assist in such conversion.

The witnesses agree that so long as there is sufficient dissolved oxygen in the water the process of digestion of the sewage will go forward without producing offensive odors and that when it sinks below a required percentage of saturation such odors will appear, but, unfortunately, there is a wide divergence of opinion among them as to what the required lower percentage is. The opinions of seemingly well qualified experts vary in giving from 25% to 50% of saturation as the amount of oxygen necessary to prevent the appearance of such offensive odors from decomposition of organic matter.

Measured by this dissolved oxygen standard, the evidence of the complainant is that as early as 1906 the

water adjacent to New York City, especially in the Bronx and lower East River, was much polluted by sewage, but that the water in other parts of the Bay, especially near Robbins Reef Light was somewhat, but not greatly, contaminated. This condition, the evidence shows, continued with no very pronounced decrease in the oxygen content of the water until 1911 when the investigations embodied in the first testimony taken were concluded. And the evidence taken under the order of the court in 1919 shows an irreconcilable conflict in the testimony as to the then condition of the water, especially near Robbins Reef Light, and as to the probable condition of it to be anticipated in the future. In the interval from 1906 to 1919 the estimated growth of the population of New York City and its suburbs draining sewage into adjacent waters was in excess of 100,000 a year—an increase of population in the aggregate much greater than the total population of the Passaic Valley Sewerage District at present, and approximately equal to its estimated population in 1940—and it is undisputed that this New York sewage, untreated, was discharged from over 450 sewers directly into the adjacent waters, for the most part at or above the line of low tide, and that only in a few instances was it carried even to the pier heads.

It would seem, therefore, that, if the anticipations of the experts for the complainants, as to the results likely to be produced by the effluent from the sewer of defendants, were well founded, by the year 1919 conditions in the harbor should have become so pronounced and plain that there could not have been such conflict as the record shows in the testimony of trustworthy and competent scientists as to its then existing condition.

Considering all of this evidence, and much more which we cannot detail, we must conclude that the complainants have failed to show by the convincing evidence which the law requires that the sewage which the defendants intend

to discharge into Upper New York Bay, even if treated only in the manner specifically described in the stipulation with the United States Government, would so corrupt the water of the Bay as to create a public nuisance by causing offensive odors or unsightly deposits on the surface or that it would seriously add to the pollution of it.

The evidence taken in 1919 also discloses that other means than those specifically described in the Government stipulation may be resorted to, if needed, for the purpose of improving the character of the effluent from the sewer, viz.: slower and more prolonged sedimentation processes; additional screening; the aëration of the sewage before it reaches the treatment plant and again after treatment and before discharge into the tunnel conveying it to the Bay; and finally, if required, chemical treatment.

Having regard to the treatment of the sewage prescribed in what we regard as a valid contract on the part of the defendants with the Government of the United States, to the specific agreement therein for protection of the waters of Upper New York Bay from pollution, and to the means which the Government will have to secure further purification, if desired, by refusing to permit the discharge of sewage into the Bay to continue, we conclude that the prayer for injunction against the operation of the sewer must be denied.

We cannot withhold the suggestion, inspired by the consideration of this case, that the grave problem of sewage disposal presented by the large and growing populations living on the shores of New York Bay is one more likely to be wisely solved by coöperative study and by conference and mutual concession on the part of representatives of the States so vitally interested in it than by proceedings in any court however constituted.

The court, recognizing the importance of the ruling which it is making to the great populations interested,

as well in the State of New Jersey as in the State of New York, will direct that the decree denying the relief prayed for shall be without prejudice to the instituting of another suit for injunction if the proposed sewer in operation shall prove sufficiently injurious to the waters of the Bay to lead the State of New York to conclude that the protection of the health, welfare or commerce of its people requires another application to this court.

It results that the bill of complainant will be dismissed but without prejudice to a renewal of the application for injunction if the operation of the sewer of defendants shall result in conditions which the State of New York may be advised requires the interposition of this court.

Bill dismissed without prejudice.

ST. LOUIS & EAST ST. LOUIS ELECTRIC RAILWAY COMPANY *v.* STATE OF MISSOURI AT THE RELATION AND TO THE USE OF HAGERMAN, COLLECTOR OF THE CITY OF ST. LOUIS, IN THE STATE OF MISSOURI.

ERROR TO THE SUPREME COURT OF THE STATE OF MISSOURI.

No. 261. Argued March 23, 1921.—Decided May 2, 1921.

A street railroad company whose tracks crossed and were confined to a bridge between Missouri and Illinois, was taxed, under Missouri Laws of 1901, p. 232, by valuing its rolling-stock, poles, wires, cash, road-bed and superstructure as such, adding a reasonable valuation of "all other property," and assigning due proportions to Missouri as the basis of the tax. *Held*, that the tax could not be regarded as a direct burden upon the company's franchise to conduct its interstate traffic over the bridge, upon the ground that the "other property" valued consisted solely of that franchise, since it appeared that much of the value of the railway as a going con-

cern was due to exclusive rights on the bridge and lucrative traffic arrangements resulting from private contracts with other companies, which must have been considered by the taxing authorities in making the valuation. P. 316.

279 Missouri, 616, affirmed.

THIS was an action by the State of Missouri to collect a tax levied on the property of the plaintiff in error railway company. The state courts, including the court below, sustained the tax. The facts are stated in the opinion.

Mr. Joseph S. Clark, with whom *Mr. William E. Garvin* was on the brief, for plaintiff in error.

Mr. Thomas G. Rutledge, with whom *Mr. J. M. Lashly* was on the brief, for defendant in error.

MR. JUSTICE CLARKE delivered the opinion of the court.

The plaintiff in error, hereinafter referred to as the Bridge Electric Company, a corporation organized under Missouri law, was the owner in 1906 of 865–1000ths of a mile of electric railway, constructed upon and extending from the easterly to the westerly end of the Eads Bridge over the Mississippi River at St. Louis. In that year the State Board of Equalization of Missouri valued the portion of this railroad which was within that State at $186,019, and levied a tax upon it for state and local purposes, which the plaintiff in error refused to pay, and thereupon this suit was instituted to recover the amount of the tax.

The case was tried on an agreed statement of facts and the State prevailed in all the state courts. Only one of the several defenses relied upon in the answer has been argued in this court, viz., that the tax is invalid because, if allowed, it would constitute a direct and unconstitutional burden on interstate commerce.

The state statute provided that in valuing railroads for taxation the State Board of Equalization should determine the total value of the entire property in the State, tangible

and intangible, of each company, and that from this total it should deduct the value of all its tangible property and then "enter the remainder upon the assessment list . . . under the head of 'all other property.'" Laws of Missouri, 1901, p. 232, § 2.

Complying with this statute the Board of Equalization valued all of the rolling stock, poles, wires and cash of the Bridge Electric Company at $32,630 per mile; the roadbed and superstructure at $5,000 per mile, and "all other property" at $500,000 per mile, making a total value per mile of $537,630.

There were .346 of a mile of the track in the State of Missouri and this proportion of the total value per mile, amounting to $186,019 (of which $173,000 was included under the item "all other property"), was the amount on which the disputed tax was levied.

The unit rule thus adopted by the Board of Equalization has long been a familiar method, often approved by this court, for valuing interstate railroad properties. *Cleveland, Cincinnati, Chicago & St. Louis Ry. Co.* v. *Backus*, 154 U. S. 439, 445; *St. Louis Southwestern Ry. Co.* v. *Arkansas*, 235 U. S. 350; *Branson* v. *Bush*, 251 U. S. 182.

It is not contended that this valuation is unreasonable in amount, but only that the property of the company, which was valued as "all other property," consisted solely of its franchise to conduct interstate passenger traffic over the interstate bridge and that therefore the tax, so far as levied on the valuation placed on that property, is a direct tax and burden on the right to engage in interstate commerce and that it is, for this reason, unconstitutional.

But the stipulation on which the case was tried does not sustain this contention.

This stipulation shows that in 1902 the Bridge Electric Company acquired by contract with the Terminal Railroad Association of St. Louis the exclusive right to operate an electric railroad over the Eads Bridge for the term of

fifty years, (for passenger traffic only and for a part of the fare to be charged) and that in the same agreement it entered into a written contract with two other electric railroad companies for the recited purpose of causing all passenger traffic originating on the lines then or thereafter controlled by them to pass over the Bridge Electric Company's road. Of the two latter companies thus contracted with, one operated extensive lines of electric street railroad in the City of East St. Louis, in Illinois, and the other operated an extensive system of suburban electric railways in Illinois. Both of these Illinois systems connected with the Bridge Company's track at the easterly end of the bridge.

Later in the same year, 1902, the Bridge Electric Company entered into another agreement by which the company operating lines in East St. Louis contracted, for a percentage of the fares to be collected for transportation over the bridge, to furnish the cars, crews and equipment for carrying, and to operate the cars necessary to carry, all passengers across the bridge, without change of cars. Coupon tickets were to be issued to passengers traveling either way across the bridge and other conveniences were provided for the purpose of increasing the bridge traffic.

It is apparent that the large value which it is conceded this street railroad had was derived, not from its mere franchise to do an interstate business, but from the exclusive right which we have seen the company acquired by private contract to operate over the Eads Bridge, a public highway, and from the other rights also derived from private contract which made its line of track a part of two Illinois systems of railway and gave it a profitable operating arrangement with them. It was these contracts which gave the company's small extent of physical property an earning capacity, and therefore a value, which enabled it to pay from their date in 1902 to the date of the disputed assessment five per cent. annual

interest on $500,000 of bonded indebtedness and an annual dividend of about three per cent. on an equal amount of capital stock.

The law applicable to the state of facts thus developed was summarized in *Atlantic & Pacific Telegraph Co.* v. *Philadelphia*, 190 U. S. 160, in a form which has been frequently approved by this court, notably in *St. Louis Southwestern Ry. Co.* v. *Arkansas*, 235 U. S. 350, 365. Slightly condensed it is that, while a State may not, in the guise of taxation, constitutionally compel a corporation to pay for the privilege of engaging in interstate commerce, yet this immunity does not prevent the State from imposing an ordinary property tax upon property having a situs within its territory and employed in interstate commerce. Even the franchise of a corporation, if not derived from the United States, although that franchise is the business of interstate commerce, is subject to state taxation as a part of its property.

The record does not show what the specific items were which entered into the consideration of the Board of Equalization in valuing "all other property" of the Bridge Electric Company, but it appears from the stipulation that the president of the company was heard with respect to the valuation and assessment of all of its property, and we cannot doubt that the contracts we have described, which very plainly gave to this short line of railway much of the value as a going concern which led the company to bond and capitalize it at $1,000,000, and the Board to value it at approximately one-half that amount, must have been taken into consideration by the Board, and that, therefore, the contention that the tax was levied exclusively upon the franchise to do an interstate business is not sound and must be rejected.

It results that the judgment of the Supreme Court of Missouri must be

Affirmed.

BLANSET v. CARDIN, AS GUARDIAN OF DAYLIGHT, A MINOR, ET AL.

APPEAL FROM THE CIRCUIT COURT OF APPEALS FOR THE EIGHTH CIRCUIT.

No. 244. Argued April 20, 1921.—Decided May 16, 1921.

1. The transmission of restricted Indian allotments by will is governed by the Act of June 25, 1910, c. 431, § 2, 36 Stat. 856, amended February 14, 1913, c. 55, 37 Stat. 678, and the regulations thereunder prescribed by the Secretary of the Interior. P. 323.
2. Oklahoma Code, § 8341, providing that no woman while married shall devise ("bequeath") more than two-thirds of her property away from her husband, does not affect a will made by a Quapaw woman and approved by the Secretary after her death, so devising her restricted land. P. 322.

261 Fed. Rep. 309, affirmed.

THIS was a suit in the District Court of the Eastern District of Oklahoma, brought by the present appellant, to assert an interest in land, claimed by him as heir of his wife, and by the defendants as devisees in her will. The District Court dismissed the bill and the Circuit Court of Appeals affirmed the decree. The facts are stated in the opinion.

Mr. Henry C. Lewis and *Mr. Paul A. Ewert* for appellant.

Mr. A. C. Wallace for appellees.

Mr. Leslie C. Garnett, Special Assistant to the Attorney General, with whom *The Solicitor General* and *Mr. H. L. Underwood*, Special Assistant to the Attorney General, were on the brief, for the United States, by special leave of court.

MR. JUSTICE MCKENNA delivered the opinion of the court.

Appellant brought this suit to have himself declared to be owner of an undivided one-third interest in all lands (they are described in the bill) and other property of which his wife, Fannie Crawfish Blanset, died seised or possessed, free and clear of all claims and demands of the appellees; and to declare void a will of his wife and its approval by the Secretary of the Interior.

The basis of the bill is the contention that under the laws of Oklahoma no man and no woman while married shall bequeath more than two-thirds of his or her property away from the other and that the prohibition extends to an Indian woman's allotment, under acts of Congress, of restricted lands.

The bill is quite involved and contains many repetitions. Its ultimate propositions may be paraphrased as follows: Appellant is a white man, and his wife, Fannie Crawfish Blanset, was an Indian woman of the Quapaw Tribe. She was an allottee of the lands herein involved which were restricted lands, so called; that is, non-alienable for the period of twenty-five years. She made a will devising her land to appellees, they being her children or grandchildren, and bequeathed to them also all trust funds which might be held by the United States for her. The will was approved by the Assistant Commissioner of Indian Affairs and by the Assistant Secretary of the Interior under and in pursuance of the provisions of an Act of Congress of June 25, 1910, c. 431, 36 Stat. 855, 856, as amended February 14, 1913, c. 55, 37 Stat. 678, and filed in the office of the Secretary of the Interior where such wills are properly and lawfully filed, and are of record.

Congress by the foregoing, and other legislation, provided "that the state laws of descent should apply to

Indian allotments and to interests therein, and that the Secretary of the Interior should be governed by the same," and that "Section 8341 of the Code of Oklahoma created an indefeasible descent in favor of the husband and that the will of a wife which attempts to will away from her husband more than two-thirds of her estate is therefore void and of no effect to the extent to which it attempts so to do, and that in such case the husband takes by descent to the same extent." By that section appellant is made heir to property worth $40,000 of the estate of his wife, while the will gives him only $5.00; that the will is null and void and that to the extent of his heirship his wife died intestate, and that he is an heir at law of one-third of her estate; that notwithstanding § 8341 each of the appellees is claiming to be the owner of a one-third undivided interest in and to all of the remaining restricted lands, inherited or otherwise, of which Fannie Crawfish Blanset died possessed and of a one-third interest to all trust funds held by the United States to her use and benefit, such claims being made under and by virtue of the will.

There is an allegation in the bill to the effect that appellant's wife left little or no personal property except moneys held in trust for her from the sale of inherited Indian lands by the United States, that by § 8419 dower and curtesy were abolished and by § 8418 it was provided as follows: "If the decedent leave a surviving husband or wife, and only one child, or the lawful issue of one child, [the estate must be distributed] in equal shares to the surviving husband, or wife and child, or issue of such child. If the decedent leave a surviving husband or wife, and more than one child living, or one child living and the lawful issue of one or more deceased children, one-third to the surviving husband or wife, and the remainder in equal shares to his children, and to the lawful issue of any deceased child, by right of representation." And by

§ 6328 it is provided: "Upon the death of either husband or wife, the survivor may continue to possess and occupy the whole homestead, which shall not in any event be subject to administration proceedings, until it is otherwise disposed of according to law; and upon the death of both husband and wife the children may continue to possess and occupy the whole homestead until the youngest child becomes of age."

It is alleged "that Section 1 of the Act of June 25, 1910, of which the Act of February 14, 1913, is amendatory, is as follows: 'That when any Indian to whom an allotment of land has been made, or may hereafter be made, dies before the expiration of the trust period and before the issuance of a fee simple patent, without having made a will disposing of said allotment as hereinafter provided, the Secretary of the Interior, upon notice and hearing, under such rules as he may prescribe, shall ascertain the legal heirs of such decedent.'"

On motion of defendants (appellees here) the bill was dismissed for want of equity. The ruling was affirmed by the Circuit Court of Appeals.

The case is not in broad compass and presents as its ultimate question the accordance or discordance of the laws of Congress and the laws of the State; and whether there is accordance or discordance depends upon a comparison of § 8341 of the Oklahoma Code, upon which appellant relies, and the acts of Congress referred to in the bill and what was done under them.

That comparison we proceed to make. By § 8341 of the Code "Every estate and interest in real or personal property to which heirs, husband, widow, or next of kin might succeed, may be disposed of by will: Provided, that no marriage contract in writing has been entered into between the parties; no man while married shall bequeath more than two-thirds of his property away from his wife, nor shall any woman while married be-

queath more than two-thirds of her property away from her husband; . . ."

The provision of the Code is determinative, appellant contends, because the law of "Descents and Distributions" of Arkansas was made applicable to the Indian Territory May 2, 1890 (c. 182, 26 Stat. 94, 95), and extended in its application in 1904 (c. 1824, 33 Stat. 573), and, while at those times "testamentary power had not been given to restricted allottees [the property in this case was a restricted allotment and the period of restriction had not expired] of any tribe, but the property descended, as to all tribes, wherever located, according to the local law," yet when Oklahoma was admitted as a State the Arkansas law was superseded by the Oklahoma Code. For this *Jefferson* v. *Fink*, 247 U. S. 288, is adduced.

But against the contention and conclusion the Act of Congress approved February 14, 1913, c. 55, 37 Stat. 678, is opposed. That act amends § 2 of the Act of June 25, 1910, so as to read as follows:

"Sec. 2. That any persons of the age of twenty-one years having any right, title, or interest in any allotment held under trust or other patent containing restrictions on alienation or individual Indian moneys or other property held in trust by the United States shall have the right prior to the expiration of the trust or restrictive period, and before the issuance of a fee simple patent or the removal of restrictions, to dispose of such property by will, in accordance with regulations to be prescribed by the Secretary of the Interior. *Provided, however*, That no will so executed shall be valid or have any force or effect unless and until it shall have been approved by the Secretary of the Interior: *Provided further*, That the Secretary of the Interior may approve or disapprove the will either before or after the death of the testator, and in case where a will has been approved and it is subse-

quently discovered that there has been fraud in connection with the execution or procurement of the will the Secretary of the Interior is hereby authorized within one year after the death of the testator to cancel the approval of the will, and the property of the testator shall thereupon descend or be distributed in accordance with the laws of the State wherein the property is located: *Provided further*, That the approval of the will and the death of the testator shall not operate to terminate the trust or restrictive period, but the Secretary of the Interior may, in his discretion, cause the lands to be sold and the money derived therefrom, or so much thereof as may be necessary, used for the benefit of the heir or heirs entitled thereto, remove the restrictions, or cause patent in fee to be issued to the devisee or devisees, and pay the moneys to the legatee or legatees either in whole or in part from time to time as he may deem advisable, or use it for their benefit: *Provided also*, That sections one and two of this Act shall not apply to the Five Civilized Tribes or the Osage Indians."

The Secretary of the Interior made regulations which were proper to the exercise of the power conferred upon him and the execution of the act of Congress, and it would seem that no comment is necessary to show that § 8341 is excluded from pertinence or operation.

But this conclusion counsel resists. He says "as long as restrictions have not been removed the allotment is subject to the plenary power and control of Congress," but "when restrictions are removed the allotment automatically becomes subject to the state law." That is, and to make application to the pending case, at the instant his wife died, appellant became heir at law to one-third of her property under the laws of the State. Appellant's reasoning is direct and confident. By his wife's death, he asserts, her allotment was emancipated from government control; that under § 8341 her will was void; she, there-

fore, died intestate and he became her heir of an undivided one-third of her allotment under § 8418 set out in the bill.

And the further contention is that § 8341 is continued because the act of Congress does not expressly provide how the land shall be devised, and because it recognizes that the state laws of descent are applicable in case the Secretary disapproves the will after the death of the testator.

If the first contention be true, the act of Congress is reduced to impotence by its contradictions. According to the contention it permits a will and immediately provides for its defeat at the very instant it is to take effect and can only take effect. Such antithetical purpose cannot be imputed to Congress and it is repelled by the words of § 2. They not only permit a will but define its permissible extent, excluding any limitation or the intrusion of any qualification by state law. They provide that one having an interest "in any allotment held under trust or other patent containing restrictions on alienation . . . shall have the right prior to the expiration of the trust or restrictive period, and before the issuance of a fee simple patent or the removal of restrictions, to dispose of *such property* [italics ours] by will, in accordance with regulations to be prescribed by the Secretary of the Interior." And it is further provided "that the Secretary of the Interior may approve or disapprove the will either before or after the death of the testator " and that neither circumstance shall "operate to terminate the trust or restrictive period, but the Secretary of the Interior may, in his discretion, . . . cause patent in fee to be issued to the devisee or devisees."

To the other contention (if it may be called such) the answer is that the contingency (disapproval of the will after the death of the testator) did not occur and besides, there were alternatives to the contingency irreconcilable with the disposition of the property under the state code.

The act of Congress is careful of conditions. In the first instance it is concerned with testacy, that is, the existence of a will. A will existing, the allotment is disposed of by it. A will not existing—either not executed or if executed, cancelled, there is intestacy, and the state laws of descent and distribution obtain. In the present case there is a will and it is uncancelled and, therefore, the contention of appellant is untenable. And it will also be observed by recurring to the act of Congress, powers are invested in the Secretary which preclude interference or control by anybody, or right in anybody to have cancelled "the patent in fee" which is empowered "to be issued to the devisee or devisees," a right appellant asserts in the present case. In a word, the act of Congress is complete in its control and administration of the allotment and of all that is connected with or made necessary by it, and is antagonistic to any right or interest in the husband of an Indian woman in her allotment under the Oklahoma Code. And we agree with the Court of Appeals that the act of Congress was the prompting of prudence to afford "protection to dependent and natural heirs against the waste of the estate as the result of an unfortunate marriage and enforced inheritance by state laws." And there can be no doubt that the act was the suggestion of the Interior Department, and its construction is an assistant, if not demonstrative criterion, of the meaning and purpose of the act. *Swigart* v. *Baker*, 229 U. S. 187; *Jacobs* v. *Prichard*, 223 U. S. 200; *United States* v. *Cerecedo Hermanos*, 209 U. S. 337. And the regulations of the Department are administrative of the act and partake of its legal force.

Our conclusion is the same as that of the Court of Appeals, "that it was the intention of Congress that this class of Indians should have the right to dispose of property by will under this act of Congress, free from restrictions on the part of the State as to the portions to be

conveyed or as to the objects of the testator's bounty, provided such wills are in accordance with the regulations and meet the approval of the Secretary of the Interior." The court added that the conclusion was in accord with the views of the Supreme Court of the State, referring to *Brock* v. *Keifer*, 59 Oklahoma, 5.

Decree affirmed.

PHILADELPHIA & READING RAILWAY COMPANY v. DI DONATO.

CERTIORARI TO THE SUPREME COURT OF THE STATE OF PENNSYLVANIA.

No. 297. Argued April 28, 1921.—Decided May 16, 1921.

A watchman employed on an interstate railroad at a public grade crossing to signal both interstate and intrastate trains and guard the tracks against disorder and obstruction, is employed in interstate commerce, irrespective of the interstate or intrastate character of the particular train he may be flagging when injured. P. 329. *Pedersen* v. *Delaware, Lackawanna & Western R. R. Co.*, 229 U. S. 146.

266 Pa. St. 412, reversed.

THE case is stated in the opinion.

Mr. George Gowen Parry for petitioner.

Mr. Francis H. Bohlen for respondent.

MR. JUSTICE MCKENNA delivered the opinion of the court.

Certiorari directed to the review of a judgment of the Supreme Court of Pennsylvania, affirming a judgment

of the Court of Common Pleas of the County of Philadelphia, which affirmed an award of the Workmen's Compensation Board of the State of Pennsylvania, allowed respondent, as widow of Pasquale Di Donato who, in the course of his employment by the Railway Company, was killed. Her petition was presented in the legal course to the Board, and assigned for an investigation to a referee who reported an award in accordance with it.

The Company prosecuted an appeal to the Board which affirmed the award and dismissed the appeal. The judgment was successively affirmed, as we have said, by the Court of Common Pleas and by the Supreme Court.

There is no connected finding of facts aside from conclusions of law. The referee found that Di Donato was employed by the Company "as a crossing watchman" at a particular public crossing, and that on March 18, 1918, at about 7:15 P. M. "while acting in the course of his employment . . . while flagging a train . . . was struck by a train of the defendant company and instantly killed." The findings then recite that the Company contended that at the time of the occurrence of the injury Di Donato "was engaged in interstate commerce," but it is added that the Company "failed to prove by the weight of the evidence that such was the fact." And further, that the Company "showed that many interstate shipments and trains passed over the rails of the defendant company . . . but they [it] did not offer any evidence whatever to show that at the time of the occurrence of the injury Pasquale Di Donato was engaged in performing some duty incident to the passage of an interstate train; and since the burden is on the defendant to show by the weight of the evidence that the injured employee was at the time of the occurrence of the injury engaged in interstate commerce, we find, as a fact," that at such time Di Donato "was not engaged in work incident to interstate commerce." It was further

found that the Company was "engaged in both intrastate and interstate commerce."

The finding by the Board was that Di Donato "was killed in the course of his employment for the defendant" while he "was employed as a watchman upon a public crossing" where a public street "crosses the tracks" of the Company. And that "an agreement was placed upon record that the defendant is engaged in both intrastate and interstate traffic." The deduction of the Board was the same as that of the referee, that the defense of interstate commerce when set up by the defendant became a matter of proof by competent and reliable testimony, and that the burden of proof of the same was thrown upon the defendant, and "that the character of the employee's undertaking in this respect must be determined by the work he had actually been engaged in at the very time of the accident."

The facts and the conclusions thus expressed by the referee and the Board were, in effect, repeated by the Supreme Court and made the grounds of decision.

The facts as found we may assume to exist, facts, however, disassociated from legal deductions from them. These facts are only that Di Donato was employed by the Company as a flagman at a public crossing to signal both intrastate and interstate trains. In other words, his employment concerned both kinds of trains without distinction between them or character of service. He was an instrument of safety for the conduct of both. And in the course of his employment he was killed by a train whose character is not disclosed. These are the facts, all else the assertion of legal propositions. We are brought, therefore, to a consideration of the soundness and determining quality of the legal propositions.

In *Pedersen* v. *Delaware, Lackawanna & Western R. R. Co.*, 229 U. S. 146, this court had occasion to consider the instrumentalities of commerce and to determine whether they should have intrastate or interstate character. The

case was concerned with mechanism—tracks and bridges, but there was a human element as well, one who was engaged in keeping the mechanisms in repair, and, it was decided, that, as they were instruments of interstate as well as of intrastate commerce, he was engaged in interstate commerce. It was said, "true, a track or bridge may be used in both interstate and intrastate commerce, but when it is so used it is none the less an instrumentality of the former; nor does its double use prevent the employment of those who are engaged in its repair or in keeping it in suitable condition for use from being an employment in interstate commerce."

Being the same in principle if not in instances, the following cases are urged to be of pertinent illustration, *Southern Pacific Co.* v. *Industrial Accident Commission*, 174 California, 8; *Graber* v. *Duluth, South Shore & Atlantic Ry. Co.*, 159 Wisconsin, 414; *Chicago & Alton R. R. Co.* v. *Industrial Commission*, 288 Illinois, 603; *Flynn* v. *New York, Susquehanna & Western R. R. Co.*, 90 N. J. L. 451. Also *Southern Ry. Co.* v. *Puckett*, 244 U. S. 571, and cases cited.

Respondent resists the application of the *Pedersen Case* and contends that the other cases do not militate against the judgment in the pending case. They, and the *Pedersen Case*, it is said, represent different classes: the *Pedersen Case* "those in which it is impossible to assign the service to any particular traffic movement, since the work is done on some instrumentality which is used indiscriminately in the general traffic of the road"; the other cases, "those in which the service is given to expedite or secure the safety of some particular traffic movement." To the latter class counsel for respondent assign the present case, and the Supreme Court accepted that view. Counsel, however, feel an impediment to their view in the fact that this court has given the *Pedersen Case* as authority for cases which counsel assign to the other class, that is, whose instance was the safety of some particular movement. But grant-

ing there is a basis for the classification that counsel make; we think the present case falls within the *Pedersen Case*. The service of a flagman concerns the safety of both commerces and to separate his duties by moments of time or particular incidents of its exertion would be to destroy its unity and commit it to confusing controversies.

And besides, as observed by the Supreme Court of the State of California in *Southern Pacific Co.* v. *Industrial Accident Commission, supra*, Di Donato's duty had other purpose than the prevention of a disaster to a particular train. It had purpose as well to the condition of the tracks and their preservation from disorder and obstructions. This service and the other service cannot be separated in duty and responsibility. It is to be remembered that not only the remedy of one employee is involved in a particular duty but that other employees and other remedies are to be considered as well, and the defenses to them, and that behind them are the respective powers that may have ordained them. Therefore, whether they be of state or congressional power, there is an equal necessity for their accurate delimitation. This case, therefore, has importance beyond the interest of the parties to it. Its principle and example, reinforcing the *Pedersen Case* and the cases based upon it, make a test by which future cases may be assigned to intrastate or interstate commerce and mark the power and policies that may be necessary or convenient to either.

As we deduce from the duty of Di Donato his employment to have been in interstate commerce, we have no occasion to consider what presumptions might be indulged if his employment were not thereby established, whether for or against intrastate commerce.

Judgment reversed and cause remanded for further proceedings not inconsistent with this opinion.

MR. JUSTICE CLARKE dissents.

PHILADELPHIA & READING RAILWAY COMPANY *v.* POLK.

CERTIORARI TO THE SUPREME COURT OF THE STATE OF PENNSYLVANIA.

No. 298. Argued April 28, 1921.—Decided May 16, 1921.

In a proceeding under a state workmen's compensation law to recover for the death of a railroad employee, findings that, when injured, he was employed as a member of a crew in charge of a draft of freight cars attached to an engine in a yard and containing both interstate and intrastate cars and freight, establish his employment in interstate commerce; a special relation to the intrastate commerce which would have rendered his employment intrastate cannot be presumed but must be proven by the actor in the proceeding. *Philadelphia & Reading Ry. Co.* v. *Di Donato, ante,* 327. P. 333. 266 Pa. St. 335, reversed.

THE case is stated in the opinion.

Mr. George Gowen Parry for petitioner.

Mr. Francis M. McAdams for respondent.

MR. JUSTICE MCKENNA delivered the opinion of the court.

Certiorari to review a judgment of the Supreme Court of the State of Pennsylvania affirming an award made under the Workmen's Compensation Board of the State in favor of respondent who is the widow of John M. Polk, who died as the result of an accident, occurring in the course of his employment by the Railway Company.

The matter of her petition proceeded in due course from the referee of the Board to the Board, from the latter to the Court of Common Pleas, and thence to the Supreme Court of the State, she being adjudged by all of them en-

titled to an award under the Workmen's Compensation Act of the State.

The facts as found are that Polk on August 28, 1917, while employed by the Railway Company on a freight train, in its Port Richmond Yard, handled by engine No. 832, was caught between two cars, and as a result thereof sustained injuries from which he died.

At the time of the occurrence of the injury the Company was a common carrier, by rail, engaged in interstate and intrastate commerce, and at such time there was a draft of freight cars attached to the engine which was in charge of the crew of which Polk was a member. Some of these cars were bound from points within the State to other points within the State and the others were loaded with various commodities, some of which were bound from points outside of the State to points within the State and others of which were bound from points within the State to points outside of the State, and there was at least one car of this draft which was passing through the State from a point in New York to a point in Illinois.

The Board, upon the appeal of the Company, adopted the findings of fact and conclusions of law of the referee and affirmed his award. This action was affirmed by the Court of Common Pleas and the latter's judgment by the Supreme Court.

The referee did not find definitely as a fact that Polk was engaged in intrastate commerce at the time of his injury, but assumed that the fact might be so, therefore, regarded it as so, because, in his opinion the burden of proving the contrary, that is, that Polk "was actually engaged in duties incident to interstate commerce," was upon the Company and the Company had "not met the burden required of it," and further, that the Company "offered no testimony whatever to show what work John M. Polk was performing at the time he was injured; . . ."

The Supreme Court approved the findings and the

deductions from them. It is manifest therefore that the case is within the rule of *Philadelphia & Reading Ry. Co.* v. *Di Donato*, just decided, *ante*, 327. Here, as there, the employment concerned both kinds of commerce, and was to be exercised as much on one as on the other,—in other words, was as much and as intimately directed to the interstate cars and freight as to the intrastate cars and freight, and that there might have been some duties directed to the latter though there is no evidence of it, is the suggestion of a speculation that has no tangible prompting in the case.

Besides, we cannot accede to the view that there is a presumption that duties performed on a train constituted of interstate and intrastate commerce were performed in the latter commerce. The presumption, indeed, might be the other way. It is to be remembered that it is the declaration of the cases that if there is an element of interstate commerce in a traffic or employment it determines the remedy of the employee. *Second Employers' Liability Cases*, 223 U. S. 1; *New York Central R. R. Co.* v. *Winfield*, 244 U. S. 147.

Northern Pacific Ry. Co. v. *Washington*, 222 U. S. 370, 375, declares and illustrates the principle. Expressing the facts and the law applicable to them, it was said, "The train, although moving from one point to another in the State of Washington, was hauling merchandise from points outside of the State destined to points within the State and from points within the State to points in British Columbia. . . . This transportation was interstate commerce, and the train was an interstate train, despite the fact that it may also have been carrying some local freight. In view of the unity and indivisibility of the service of the train crew and the paramount character of the authority of Congress to regulate commerce, the act of Congress was exclusively controlling." *Southern Ry. Co.* v. *United States*, 222 U. S. 20.

It would seem indisputable, therefore, if there be an assertion of the claim or remedy growing out of an occurrence in which there are constituents of interstate commerce, the burden of explanation and avoidance is on him who asserts the claim or remedy, not on the railway company to which it is directed, and there is nothing in *Osborne* v. *Gray*, 241 U. S. 16, in opposition. Indeed, the court was asked in that case to do what the referee and the Supreme Court in this case have done, that is, to assume to know things of which there is no evidence.

Judgment reversed and cause remanded for further proceedings not inconsistent with this opinion.

MR. JUSTICE CLARKE dissents.

BROWN v. UNITED STATES.

CERTIORARI TO THE CIRCUIT COURT OF APPEALS FOR THE FIFTH CIRCUIT.

No. 103. Argued November 19, 1920.—Decided May 16, 1921.

1. The right of a man to stand his ground and defend himself when attacked with a deadly weapon, even to the extent of taking his assailant's life, depends upon whether he reasonably believes that he is in immediate danger of death or grievous bodily harm from his assailant, and not upon the detached test whether a man of reasonable prudence, so situated, might not think it possible to fly with safety or to disable his assailant rather than kill him. P. 343. *Beard* v. *United States*, 158 U. S. 550.
2. So *held* of a homicide committed on a post-office site by one who was there in discharge of his duty. P. 344.
3. In a prosecution for murder, it appeared that the defendant shot the deceased several times and again when the deceased had fallen and was lying on the ground. *Held*, that evidence of self-defense

was for the jury, and that, if they disbelieved the defendant's testimony that the last shot was an accident, they might still have acquitted him if, though intentional, it followed close upon the others in the heat of the conflict and while he believed he was fighting for his life. P. 344.

257 Fed. Rep. 46, reversed.

CERTIORARI to review a judgment of the Circuit Court of Appeals affirming a judgment of the District Court upon a conviction of murder in the second degree. The facts are given in the opinion, *post*, 341.

Mr. James R. Dougherty and *Mr. E. C. Brandenburg*, with whom *Mr. W. E. Pope*, *Mr. Gordon Boone* and *Mr. H. S. Bonham* were on the brief, for petitioner:

The court below erred in not holding that the indictment upon its face did not charge any offense either against the laws of the United States, or within the territorial jurisdiction of the United States.

It was error to instruct the jury that petitioner, though in a place where he had a right to be and though the deceased was making a felonious assault upon him, with intent to kill him or do him some serious bodily injury, was obliged to retreat, though without fault on his part, before he could exercise his right of self-defense, and slay the deceased.

The duty to retreat did not exist in cases of justifiable homicide or justifiable self-defense at the common law. Russell on Crimes, 3d Amer. ed., pp. 508–521; 1 Bishop's New Criminal Law, §§ 849, 850, 851; 1 Hale's Pleas of the Crown, 479–481; 4 Blackstone's Comm. 185; 3 Coke's Inst. 55, 56; Foster's Crown Cases, p. 273; 1 East, Pleas of the Crown, p. 271; Hawkins, Pleas of the Crown, 7th ed., vol. 1, p. 172; 2 Wharton, Criminal Law, § 1019; Wharton, Homicide, § 485; *Beard* v. *United States*, 158 U. S. 550; *Allen* v. *United States*, 150 U. S. 551, 562; s. c. 164 U. S. 492–497; *Rowe* v. *United States*, 164 U. S. 546;

Erwin v. *State*, 29 Oh. St. 186; *Runyan* v. *State*, 57 Indiana, 80, 83; *United States* v. *Wiltberger*, Fed. Cas. No. 16,738; *United States* v. *Outerbridge*, 5 Sawy. 620; *Carpenter* v. *State*, 62 Arkansas, 286; *State* v. *Cain*, 20 W. Va. 679; *State* v. *Clark*, 51 W. Va. 457; *Pond* v. *People*, 8 Michigan, 150; *State* v. *Gentry*, 125 N. Car. 733.

A man need not retreat from his place of business when feloniously assaulted, but may stand his ground. A servant or employer has the same right as the owner. If petitioner had owned the lot he would not have been obliged to retreat. He was at the place of his business or his master's business. We submit that this gave him the right to stand his ground. *Andrews* v. *State*, 159 Alabama, 14; *Cary* v. *State*, 76 Alabama, 78; *State* v. *Goodager*, 56 Oregon, 198; *Haynes* v. *State*, 17 Georgia, 465; *Suell* v. *Derricott*, 161 Alabama, 259.

The right to defend one's home, even to the point of slaying a forcible intruder, or one who assaulted the owner therein, does not seem to have depended at the common law entirely upon the fact that the slayer was assaulted feloniously, that is, with an intent to kill him. 1 Bishop's New Criminal Law, § 858; 1 Hale's Pleas of the Crown, 458; *Aldrich* v. *Wright*, 53 N. H. 398.

Mr. Assistant Attorney General Stewart, with whom *Mr. W. C. Herron* was on the brief, for the United States:

The question first arises whether any charge as to the law of self-defense was necessary and whether, therefore, the charge as given and complained of by the petitioner may not be disregarded on this writ. Act of February 26, 1919, c. 48, 40 Stat. 1181; *Doremus* v. *United States*, 262 Fed. Rep. 849, 853; *Battle* v. *United States*, 209 U. S. 36, 38; *Addington* v. *United States*, 165 U. S. 184, 187.

The common law never recognized two species of homicide in self-defense, one justifiable and the other excusable; one dispensing with avoidance of, or retreat

from, an assault with a deadly weapon, the other requiring it; on the contrary, the common law, in every case where public interests, *e. g.*, aid of justice, were not involved, required the assaulted person to avoid homicide, if he could do so without endangering the life of himself or another. 2 Pollock & Maitland's History of English Law, pp. 476–481; 3 Stephen, History of Criminal Law, pp. 36–41, 47, 49; Beale, Retreat from Murderous Assault, 16 Harv. Law Rev. 567; Bracton (1250), Twiss ed., c. v, bk. 3, ff. 104b, 134, 144b; Britton (1290), c. vi, pp. 34 *et seq.*, 113; Bracton's Note Book Nos. 1084, 1215; *Howel's Case* (1221), Kenny's Cas. on Crim. Law, pp. 139, 141, 142; Y. B. 30–31, Edw. I, 510, 512 (1302); 6 Edw. I, c. 9; Fitzherbert's Abridgement, Title Corone Nos. 261, 284–287, 305; *Compton's Case*, 22 Lib. Ass. 97, pl. 55; 24 Henry VIII, c. 5; *Cooper's Case* (1663), Cro. Car. 544; 3 Coke's Inst., c. 8, p. 55; 1 Hale's Pleas of the Crown, pp. 424, 425, 478 *et seq.*; *Daver's Case* (1623), Godbolt, 288; *Calfield* v. *The Keeper*, Roll's Reps. 189.

Counsel rely largely upon Foster's view—that, in case of justifiable self-defense, the assaulted party may repel force with force and is not obliged to retreat—(Foster's Crown Cases, pp. 255, 267, 273), and upon *Beard* v. *United States*, 158 U. S. 550, 564, which sustains their view. But Foster's statement does not represent the common law. 1 Hawkins, Pleas of the Crown, pp. 104–115; *Pond* v. *People*, 8 Michigan, 150, 177; Bracton, *supra*, f. 120b; *Morse's Case*, 4 Cr. App. Cas. 50; *Aldrich* v. *Wright*, 53 N. H. 398, 404, 405. Though repeated as law many times, it has never had any effect on actual cases in the English courts. See *Rex* v. *Smith*, 8 C. & P. 160; *Rex* v. *Bull*, 9 C. & P. 22; *Rex* v. *Knock*, 14 Cox Cr. Cas. 1; *Rex* v. *Rose*, 15 Cox Cr. Cas. 540; *Rex* v. *Symondson*, 60 J. P. 645. Foster has been often quoted and relied on by the courts of this country but it is not clear that his view had any effect on the federal courts prior

to the *Beard Case* (1895). See *United States* v. *Wiltberger* (1819), 3 Wash. 515, 521; *United States* v. *Outerbridge* (1868), 5 Sawy. 620; *United States* v. *Mingo* (1854), 2 Curt. 1, 5; *United States* v. *King* (1888), 34 Fed. Rep. 302, 307, 308; *United States* v. *Lewis* (1901), 111 Fed. Rep. 630, 635. In *United States* v. *Travers* (1814), 2 Wheeler Cr. Cas. 490, 497, 498, 507, the law is stated almost in Foster's language, but it is not clear that the point was important in the case or was called to the attention of the judges. In the *Beard Case*, the defendant was on his own premises, and, in view of the subsequent decisions in *Allen* v. *United States*, 164 U. S. 492, 497, 498, and *Alberty* v. *United States*, 162 U. S. 499, 507, 508, that decision should be limited to the right not to retreat when assaulted in one's own house. It is not clear whether, in *Addington* v. *United States*, 165 U. S. 184, 187, the court meant to reaffirm the general statement of the right to kill without retreating, made in the *Beard Case*, or not, or to extend it beyond the exact case there presented.

The common law knew nothing of two kinds of homicide in self-defense, mutually destructive. If Foster's statement were correct it would follow that on an assault with manifest intent to commit a known felony on the person assaulted there would be (a) no duty to retreat generally, but (b) a duty to retreat if this manifest assault was part of a "chance medley." Such a distinction is clearly impracticable and impossible of application before a jury.

As it recognized only one species of homicide in self-defense, so the common law applied without question to all such homicides the rule that the person assaulted was under duty to avoid killing his assailant by retreating, if that was practically possible under the circumstances as they appeared to him. Even Foster admits it as to what he calls excusable homicide in self-defense; and when his distinction of two species of such homicides disappears

(as it does in so far as the common law is concerned), the rule, since its existence is admitted, must extend as well to his so-called justifiable homicide in self-defense.

Even assuming that Foster's statement can be taken as in any way representing the common law, it should not be extended to cases (like the present) where the assault from which the right to kill is derived is no more than, but, on the contrary, is exactly equivalent to the assault with manifest intent to commit a felony specified in the alleged rule. The doctrine of Foster, if adopted at all, should be limited to cases where the assault is merely a collateral means to carry out an independent intent to commit a felony, as where A lies in wait for B, to murder him, and on his approach attacks him. If the rule be so limited, it does not apply to the case at bar because there is no evidence of any independent intent on the part of Hermes to murder petitioner, but, on the contrary, the evidence of the latter himself shows that Hermes came to the excavation to haul dirt, and that the assault was induced by petitioner's statement in regard to such hauling.

In order to excuse or to justify the taking of human life, it must appear that the killing was reasonably necessary to protect other interests which for good reasons the law regards as more important, under all the circumstances, than the continued existence of the life in question. The difficulty lies in defining such "other interests." In so far as self-defense is concerned, the normal case of another interest is the life of a person other than the one killed. If the protection of that life makes necessary the homicide in question, there can be no doubt that the law must excuse or justify the killing. But one evident method of avoiding a homicide is to avoid a conflict from which it may arise, and hence to retreat if assaulted, provided such a retreat would, under all the circumstances as they present themselves to the person assaulted, accomplish the end desired by the law, viz., to preserve

human life if it can be done without seriously endangering other human lives. The rule of the common-law, therefore, that the person assaulted is bound to retreat provided such a retreat would not be dangerous to his personal safety, is clearly founded on a reasonable, sensible principle, and goes as far as such reasonable principle requires, if the only "other interest" had in mind is the life and personal safety of the one assaulted.

The rule laid down by Foster and approved in the *Beard Case* must be supported by a respect for some interest which the law ought to protect other than human life or personal safety, since the latter are sufficiently protected by the very terms of the common-law rule. The only "other interest" which can be had in mind is the self-respect and honor of the person assaulted. The question therefore is whether such self-respect and honor are in the eye of the law sufficient to weigh down the balance as against human life. We submit that they are not.

MR. JUSTICE HOLMES delivered the opinion of the court.

The petitioner was convicted of murder in the second degree committed upon one Hermes at a place in Texas within the exclusive jurisdiction of the United States, and the judgment was affirmed by the Circuit Court of Appeals. 257 Fed. Rep. 46. A writ of certiorari was granted by this Court. 250 U. S. 637. Two questions are raised. The first is whether the indictment is sufficient, inasmuch as it does not allege that the place of the homicide was acquired by the United States "for the erection of a fort, magazine, arsenal, dock-yard, or other needful building," although it does allege that it was acquired from the State of Texas by the United States for the exclusive use of the United States for its public purposes and was under the exclusive jurisdiction of the same. Penal Code of March 4, 1909, c. 321, § 272, Third. 35 Stat. 1088.

Constitution, Art. I, § 8. In view of our opinion upon the second point we think it unnecessary to do more than to refer to the discussion in the Court below upon this.

The other question concerns the instructions at the trial. There had been trouble between Hermes and the defendant for a long time. There was evidence that Hermes had twice assaulted the defendant with a knife and had made threats communicated to the defendant that the next time, one of them would go off in a black box. On the day in question the defendant was at the place above mentioned superintending excavation work for a postoffice. In view of Hermes's threats he had taken a pistol with him and had laid it in his coat upon a dump. Hermes was driven up by a witness, in a cart to be loaded, and the defendant said that certain earth was not to be removed, whereupon Hermes came toward him, the defendant says, with a knife. The defendant retreated some twenty or twenty-five feet to where his coat was and got his pistol. Hermes was striking at him and the defendant fired four shots and killed him. The judge instructed the jury among other things that "it is necessary to remember, in considering the question of self-defense, that the party assaulted is always under the obligation to retreat, so long as retreat is open to him, provided he can do so without subjecting himself to the danger of death or great bodily harm." The instruction was reinforced by the further intimation that unless "retreat would have appeared to a man of reasonable prudence, in the position of the defendant, as involving danger of death or serious bodily harm" the defendant was not entitled to stand his ground. An instruction to the effect that if the defendant had reasonable grounds of apprehension that he was in danger of losing his life or of suffering serious bodily harm from Hermes he was not bound to retreat was refused. So the question is brought out with sufficient clearness whether the formula

laid down by the Court and often repeated by the ancient law is adequate to the protection of the defendant's rights.

It is useless to go into the developments of the law from the time when a man who had killed another no matter how innocently had to get his pardon, whether of grace or of course. Concrete cases or illustrations stated in the early law in conditions very different from the present, like the reference to retreat in Coke, Third Inst. 55, and elsewhere, have had a tendency to ossify into specific rules without much regard for reason. Other examples may be found in the law as to trespass *ab initio*, *Commonwealth* v. *Rubin*, 165 Massachusetts, 453, and as to fresh complaint after rape. *Commonwealth* v. *Cleary*, 172 Massachusetts, 175. Rationally the failure to retreat is a circumstance to be considered with all the others in order to determine whether the defendant went farther than he was justified in doing; not a categorical proof of guilt. The law has grown, and even if historical mistakes have contributed to its growth it has tended in the direction of rules consistent with human nature. Many respectable writers agree that if a man reasonably believes that he is in immediate danger of death or grievous bodily harm from his assailant he may stand his ground and that if he kills him he has not exceeded the bounds of lawful self-defense. That has been the decision of this Court. *Beard* v. *United States*, 158 U. S. 550, 559. Detached reflection cannot be demanded in the presence of an uplifted knife. Therefore in this Court, at least, it is not a condition of immunity that one in that situation should pause to consider whether a reasonable man might not think it possible to fly with safety or to disable his assailant rather than to kill him. *Rowe* v. *United States*, 164 U. S. 546, 558. The law of Texas very strongly adopts these views as is shown by many cases, of which it is enough to cite two. *Cooper* v. *State*, 49 Tex. Crim. Rep. 28, 38. *Baltrip* v. *State*, 30 Tex. Ct. App. 545, 549.

It is true that in the case of Beard he was upon his own land (not in his house), and in that of Rowe he was in the room of a hotel, but those facts, although mentioned by the Court, would not have bettered the defence by the old common law and were not appreciably more favorable than that the defendant here was at a place where he was called to be, in the discharge of his duty. There was evidence that the last shot was fired after Hermes was down. The jury might not believe the defendant's testimony that it was an accidental discharge, but the suggestion of the Government that this Court may disregard the considerable body of evidence that the shooting was in self-defence is based upon a misunderstanding of what was meant by some language in *Battle* v. *United States*, 209 U. S. 36, 38. Moreover if the last shot was intentional and may seem to have been unnecessary when considered in cold blood, the defendant would not necessarily lose his immunity if it followed close upon the others while the heat of the conflict was on, and if the defendant believed that he was fighting for his life.

The Government presents a different case. It denies that Hermes had a knife and even that Brown was acting in self-defence. Notwithstanding the repeated threats of Hermes and intimations that one of the two would die at the next encounter, which seem hardly to be denied, of course it was possible for the jury to find that Brown had not sufficient reason to think that his life was in danger at that time, that he exceeded the limits of reasonable self-defence or even that he was the attacking party. But upon the hypothesis to which the evidence gave much color, that Hermes began the attack, the instruction that we have stated was wrong.

Judgment reversed.

MR. JUSTICE PITNEY and MR. JUSTICE CLARKE dissent.

NEW YORK TRUST COMPANY ET AL., AS EXECUTORS OF PURDY, v. EISNER.

ERROR TO THE DISTRICT COURT OF THE UNITED STATES FOR THE SOUTHERN DISTRICT OF NEW YORK.

No. 286. Argued April 25, 26, 1921.—Decided May 16, 1921.

1. The Act of September 8, 1916, c. 463, Title II, § 201 *et seq.*, 39 Stat. 777, imposes a tax on the transfer of the net estate of every decedent, graduated according to the value as ascertained by deducting, in the case of a resident, from the gross estate, funeral, administration and other expenses and charges, and a specified exemption; the tax is due in one year from the decedent's death, is payable primarily by the personal representative, and is made a lien upon the gross estate except such part as is paid out for allowed charges, etc. *Held*, an indirect tax, not requiring apportionment, and not an unconstitutional interference with the rights of the States to regulate descent and distribution. P. 348. *Knowlton* v. *Moore*, 178 U. S. 41.
2. That the tax may occasion inequalities in amounts received by beneficiaries does not affect its validity. P. 349.
3. "Charges against the estate," deductible under § 203 of the act in computing net value, affect the estate as a whole, and therefore do not include state inheritance and succession taxes on the shares of individual beneficiaries. P. 350.

263 Fed. Rep. 620; affirmed.

THE case is stated in the opinion.

Mr. George Sutherland, with whom *Mr. Francis J. McLoughlin* and *Mr. H. T. Newcomb* were on the briefs, for plaintiffs in error.

The Solicitor General for defendant in error.

Mr. John B. Gleason, for the State Comptroller of the State of New York, by special leave of court.

Mr. J. Weston Allen, Attorney General of the Commonwealth of Massachusetts, for the Commonwealth of Massachusetts, by special leave of court.

Mr. Clifford L. Hilton, Attorney General of the State of Minnesota, and *Mr. Egbert S. Oakley*, by leave of court, filed a brief as *amici curiæ*.

Mr. Arcadius L. Agatin and *Mr. Francis H. De Groat*, by leave of court, filed a brief as *amici curiæ*.

MR. JUSTICE HOLMES delivered the opinion of the court.

This is a suit brought by the executors of one Purdy to recover an estate tax levied under the Act of Congress of September 8, 1916, c. 463, Title II, § 201, 39 Stat. 756, 777, and paid under duress on December 14, 1917. According to the complaint Purdy died leaving a will and codicil directing that all succession, inheritance and transfer taxes should be paid out of the residuary estate, which was bequeathed to the descendants of his brother. The value of the residuary estate was $427,414.96, subject to some administration expenses. The executors had been required to pay and had paid inheritance and succession taxes to New York ($32,988.97) and other States ($4,780.-91) amounting in all to $37,769.88. The gross estate as defined in § 202 of the act of Congress was $769,799.39; funeral expenses and expenses of administration, except the above taxes, $61,322.08; leaving a net value for the payment of legacies, except as reduced by the taxes of the United States, of $670,707.43. The plaintiffs were compelled to pay $23,910.77 to the United States, no deduction of any part of the above mentioned $37,769.88 being allowed. They allege that the act of Congress is unconstitutional, and also that it was misconstrued in not allowing a deduction of state inheritance and succession taxes as charges within the meaning of § 203. On demurrer the District Court dismissed the suit.

By § 201 of the act, "a tax . . . equal to the following percentage, of the value of the net estate, to be

determined as provided in section two hundred and three, is hereby imposed upon the transfer of the net estate of every decedent dying after the passage of this Act," with percentages rising from one per centum of the amount of the net estate not in excess of $50,000 to ten per centum of the amount in excess of $5,000,000. Section 202 gives the mode of determining the value of the gross estate. Then, by § 203 it is enacted "That for the purpose of the tax the value of the net estate shall be determined—(a) In the case of a resident, by deducting from the value of the gross estate—(1) Such amounts for funeral expenses, administration expenses, claims against the estate, unpaid mortgages, losses incurred during the settlement of the estate arising from fires, storms, shipwreck, or other casualty, and from theft, when such losses are not compensated for by insurance or otherwise, support during the settlement of the estate of those dependent upon the decedent, and such other charges against the estate, as are allowed by the laws of the jurisdiction, whether within or without the United States, under which the estate is being administered; and (2) an exemption of $50,000." The tax is to be due in one year after the decedent's death. § 204. Within thirty days after qualifying the executor is to give written notice to the collector and later to make return of the gross estate, deductions allowed, net estate and the tax payable thereon. § 205. The executor is to pay the tax. § 207. The tax is a lien for ten years on the gross estate except such part as is paid out for allowed charges, § 209, and if not paid within sixty days after it is due is to be collected by a suit to subject the decedent's property to be sold. § 208. In case of collection from some person other than the executor, the same section provides for contribution from or marshalling of persons subject to equal or prior liability "it being the purpose and intent of this title that so far as is practicable and unless otherwise directed by the will of the decedent the tax

shall be paid out of the estate before its distribution." These provisions are assailed by the plaintiffs in error as an unconstitutional interference with the rights of the States to regulate descent and distribution, as unequal and as a direct tax not apportioned as the Constitution requires.

The statement of the constitutional objections urged imports on its face a distinction that, if correct, evidently hitherto has escaped this Court. See *United States* v. *Field*, 255 U. S. 257. It is admitted, as since *Knowlton* v. *Moore*, 178 U. S. 41, it has to be, that the United States has power to tax legacies, but it is said that this tax is cast upon a transfer while it is being effectuated by the State itself and therefore is an intrusion upon its processes, whereas a legacy tax is not imposed until the process is complete. An analogy is sought in the difference between the attempt of a State to tax commerce among the States and its right after the goods have become mingled with the general stock in the State. A consideration of the parallel is enough to detect the fallacy. A tax that was directed solely against goods imported into the State and that was determined by the fact of importation would be no better after the goods were at rest in the State than before. It would be as much an interference with commerce in one case as in the other. *Darnell & Son Co.* v. *Memphis*, 208 U. S. 113. *Welton* v. *Missouri*, 91 U. S. 275. Conversely if a tax on the property distributed by the laws of a State, determined by the fact that distribution has been accomplished, is valid, a tax determined by the fact that distribution is about to begin is no greater interference and is equally good.

Knowlton v. *Moore*, 178 U. S. 41, dealt, it is true, with a legacy tax. But the tax was met with the same objection; that it usurped or interfered with the exercise of state powers, and the answer to the objection was based upon general considerations and treated the "power to transmit

or the transmission or receipt of property by death" as all standing on the same footing. 178 U. S. 57, 59. After the elaborate discussion that the subject received in that case we think it unnecessary to dwell upon matters that in principle were disposed of there. The same may be said of the argument that the tax is direct and therefore is void for want of apportionment. It is argued that when the tax is on the privilege of receiving, the tax is indirect because it may be avoided, whereas here the tax is inevitable and therefore direct. But that matter also is disposed of by *Knowlton* v. *Moore*, not by an attempt to make some scientific distinction, which would be at least difficult, but on an interpretation of language by its traditional use—on the practical and historical ground that this kind of tax always has been regarded as the antithesis of a direct tax; "has ever been treated as a duty or excise, because of the particular occasion which gives rise to its levy." 178 U. S. 81–83. Upon this point a page of history is worth a volume of logic.

The inequalities charged upon the statute, if there is an intestacy, are all inequalities in the amounts that beneficiaries might receive in case of estates of different values, of different proportions between real and personal estate, and of different numbers of recipients; or if there is a will affect legatees. As to the inequalities in case of a will they must be taken to be contemplated by the testator. He knows the law and the consequences of the disposition that he makes. As to intestate successors the tax is not imposed upon them but precedes them and the fact that they may receive less or different sums because of the statute does not concern the United States.

There remains only the construction of the act. The argument against its constitutionality is based upon a premise that is unfavorable to the contention of the plaintiffs in error upon this point. For if the tax attaches to the estate before distribution—if it is a tax on the right

to transmit, or on the transmission at its beginning, obviously it attaches to the whole estate except so far as the statute sets a limit. "Charges against the estate" as pointed out by the Court below are only charges that affect the estate as a whole, and therefore do not include taxes on the right of individual beneficiaries. This reasoning excludes not only the New York succession tax but those paid to other States, which can stand no better than that paid in New York. What amount New York may take as the basis of taxation and questions of priority between the United States and the State are not open in this case.

Decree affirmed.

AMERICAN BANK & TRUST COMPANY ET AL. *v.* FEDERAL RESERVE BANK OF ATLANTA, GEORGIA, ET AL.

APPEAL FROM THE CIRCUIT COURT OF APPEALS FOR THE FIFTH CIRCUIT.

No. 679. Argued April 13, 14, 1921.—Decided May 16, 1921.

1. A suit against a Federal Reserve Bank and its officers, *held* a suit arising under a law of the United States within the meaning of § 24, cl. 1, of the Judicial Code, such banks being creatures of the Federal Reserve Act. P. 356.
2. A Federal Reserve Bank is not a national banking association within § 24, cl. 16, of the Judicial Code, which declares that such associations, for the purposes of suing and being sued, shall (except in certain cases) be deemed citizens of the States where they are located. P. 357.
3. Several country banks of Georgia alleged that they derived an important part of their income from charges on payment of checks drawn by their depositors when sent in, usually through other banks, from a distance; that banks of the Federal Reserve System were

forbidden to make such charges; and that the defendant Federal Reserve Bank and its officers, in pursuance of a policy of the Federal Reserve Board, for the purpose of compelling the plaintiffs and like banks to become members of the system, or to open clearing accounts with the defendant, (which would deprive them of the aforesaid charges, reduce their lending power, and drive some of them out of business), intended to accumulate such checks in large amounts and then require cash payment at par by presentation over the counter or otherwise so as to compel plaintiffs to maintain so much cash in their vaults that they must either give up business or submit, if able, to the defendant's scheme. *Held*, that the bill stated a cause for an injunction. P. 357.

269 Fed. Rep. 4, reversed.

APPEAL from a decree of the Circuit Court of Appeals affirming a decree of the District Court, dismissing, for want of equity, a bill brought by divers state banks against a Federal Reserve Bank and its officers for an injunction. The facts are stated in the opinion.

Mr. Alexander W. Smith, with whom *Mr. T. M. Stevens*, *Mr. Orville A. Park* and *Mr. Greene F. Johnson* were on the briefs, for appellants.

Mr. Robert S. Parker and *Mr. Hollins N. Randolph* for appellees:

The Federal Reserve Banks have the right under the Federal Reserve Act to undertake, if so directed or authorized by the Federal Reserve Board, to accept checks and drafts payable upon presentation, upon whatever bank drawn. That basic right is substantiated by the terms of the law itself.

If this clearing of checks be undertaken, it must be carried out in a manner permitted by law.

The provision of the Federal Reserve Act that no charges made by a bank for collection or payment of checks and drafts, and remission therefor, by exchange or otherwise, shall be made against the Federal Reserve

Banks, clearly makes illegal the payment by defendant of such charges undertaken to be exacted by the payee bank for the "service" of remitting by mail.

If the Reserve Bank be prohibited from paying such charges, and if the payee bank refuse to forego the same, the Reserve Banks must collect in some other way, or else deny the business and commerce of the country the par collection of checks to which it is, at the option of the Reserve Banks, entitled.

The only methods for collecting checks, other than through a clearing house or through the mails, involve a presentation over the counter of the bank upon which the check is drawn. In this there is nothing illegal, unusual or untoward.

It follows, that if the non-member banks are entitled to the relief prayed, the result will be to balk the holder of any check, drawn upon a non-member or a non-clearing bank, in the exercise of his right to have the same cleared or paid through an agent of his own choice. If the holder of such a check wishes to avail himself of the collection service of a bank which may be a member of the Federal Reserve System, and if the machinery through which the member bank operates to clear checks be the Federal Reserve System, and if the Federal Reserve Bank be prohibited by the court's writ of injunction from collecting the check, in the only way lawful to it under the Reserve Act, the practical effect is to allow the payee bank to utilize the payment of such checks for its own aggrandizement, at the expense of the business and commercial interests of the country.

This bill should have been dismissed, because there is no basis therein laid for the relief in equity prayed. An injunction is asked against the commission of acts fundamentally and unquestionably legal, and it is to the substance of a bill that the court must look and not to the conclusions attempted to be predicated upon the averments of fact.

If acts done be lawful, the courts cannot inquire into the motive, even conceding for the purpose of this argument that the motives of the defendants might be criticized. It would be an absurd proposition, for instance, to say that a mortgagee with the mortgage debt in default, could be prevented from foreclosing the mortgage because of his desire to see ill fortune visited on the mortgagor.

The vague charges of compulsion and coercion designed to force the plaintiffs to join the Federal Reserve System are conclusions pure and simple, and cannot be maintained or supported by any allegation of fact contained in the bill. A threat to do a lawful thing which might deplete to some extent the profits of a bank adds no element of actionable wrong. It is no part of the duty of any financial institution so to conduct its affairs as to waive or forego legal rights in order that another institution may realize the maximum of profit from the conduct of its business. There is no injury in contemplation of law in those cases where the party who is alleged to have inflicted damage has inflicted such damage as an incident in and to the exercise on his part of a complete legal right.

It is a novel conception of "property" to regard it as embracing the "right" to make a profit upon a service which is not rendered. It is equally novel to conceive of an unlawful deprivation of property rights as being accomplished simply by abstaining from the invoking of a service for the rendition of which, if rendered, the party "deprived" would be entitled to a profitable compensation. *Tanenbaum* v. *New York Fire Insurance Exchange*, 68 N. Y. S. 342.

We respectfully submit that the doctrine of *sic utere tuo ut alienum non lædas* has no application. To carry out the policy of Congress, as embodied in the Federal Reserve Act, the actuating motive in so doing being to observe the letter and spirit of said act, and not to inflict

injury upon appellants, does not constitute a use of one's own property in such manner as to injure the rights or property of another.

A person only incidentally affected has no right to complain of an *ultra vires* act. *National Bank* v. *Matthews*, 98 U. S. 621. But, regardless of whether the appellants would have the right to enjoin the commission of an act by the appellee bank upon the ground that it entailed an unauthorized expenditure of its funds, this bank unquestionably has the charter right and corporate capacity to pay the expense of employing a messenger or agent to make collection of checks upon personal presentation. There is no merit in the contention that because a Reserve Bank is prohibited by law from paying "exchange" charges exacted by banks to cover the "service" of remitting for checks and drafts, therefore, the prohibition extends to the incurring of any expense in and about such collections.

The legislative history of §§ 13 and 16 of the Federal Reserve Act supports our contention that the underlying purpose of this legislation, with successive amendments designed to facilitate clearing, was to protect the clearing house established by the Federal Reserve Board, and not to prohibit Federal Reserve Banks from incurring such expenses in connection with the collection of checks as are not expressly prohibited in and by the specific terms of the statute. It follows, therefore, that there is nothing illogical in the position of the Federal Reserve Board and of the defendants in this case, viz: that they cannot, under the law, pay charges to a payee bank for remittances on account of checks and drafts drawn upon the bank undertaking to make the charge, but may legally pay the charges of an agent employed for personal presentation. To pay such "exchange" charges to a bank would be destructive of universal par clearance—to compensate an agent who may collect checks by per-

sonal presentation is in aid of the extension of these clearing functions, and not destructive thereof.

The Solicitor General and *Mr. Walter S. Logan*, by leave of court, filed a brief as *amici curiæ*.

MR. JUSTICE HOLMES delivered the opinion of the court.

This is a bill in equity brought by country banks incorporated by the State of Georgia against the Federal Reserve Bank of Atlanta, incorporated under the laws of the United States, and its officers. It was brought in a State Court but removed to the District Court of the United States on the petition of the defendants. A motion to remand was made by the plaintiffs but was overruled. The allegations of the bill may be summed up in comparatively few words. The plaintiffs are not members of the Federal Reserve System and many of them have too small a capital to permit their joining it—a capital that could not be increased to the required amount in the thinly populated sections of the country where they operate. An important part of the income of these small institutions is a charge for the services rendered by them in paying checks drawn upon them at a distance and forwarded, generally by other banks, through the mail. The charge covers the expense incurred by the paying bank and a small profit. The banks in the Federal Reserve System are forbidden to make such charges to other banks in the System. Federal Reserve Act of December 23, 1913, c. 6, § 13, 38 Stat. 263; amended March 3, 1915, c. 93, 38 Stat. 958; September 7, 1916, c. 461, 39 Stat. 752; and June 21, 1917, c. 32, §§ 4, 5, 40 Stat. 234, 235. It is alleged that in pursuance of a policy accepted by the Federal Reserve Board the defendant bank has determined to use its power to compel the plaintiffs and others in like situation to become members of

the defendant, or at least to open a non-member clearing account with defendant, and thereby, under the defendant's requirements, to make it necessary for the plaintiffs to maintain a much larger reserve than in their present condition they need. This diminution of their lending power coupled with the loss of the profit caused by the above mentioned clearing of bank checks and drafts at par will drive some of the plaintiffs out of business and diminish the income of all. To accomplish the defendants' wish they intend to accumulate checks upon the country banks until they reach a large amount and then to cause them to be presented for payment over the counter or by other devices detailed to require payment in cash in such wise as to compel the plaintiffs to maintain so much cash in their vaults as to drive them out of business or force them, if able, to submit to the defendants' scheme. It is alleged that the proposed conduct will deprive the plaintiffs of their property without due process of law contrary to the constitution of Georgia and that it is *ultra vires*. The bill seeks an injunction against the defendants collecting checks except in the usual way. The District Court dismissed the bill for want of equity and its decree was affirmed by the Circuit Court of Appeals. 269 Fed. Rep. 4. The plaintiffs appealed, setting up want of jurisdiction in the District Court and error in the final decree.

We agree with the Court below that the removal was proper. The principal defendant was incorporated under the laws of the United States and that has been established as a ground of jurisdiction since *Osborn* v. *Bank of the United States*, 9 Wheat. 738. *Pacific Railroad Removal Cases*, 115 U. S. 1. *Matter of Dunn*, 212 U. S. 374. We shall say but a word in answer to the appellants' argument that a suit against such a corporation is not a suit arising under those laws within § 24 of the Judicial Code of March 3, 1911, c. 231, 36 Stat. 1087. The contrary is

established, and the accepted doctrine is intelligible at least since it is part of the plaintiffs' case that the defendant bank existed and exists as an entity capable of committing the wrong alleged and of being sued. These facts depend upon the laws of the United States. *Bankers Trust Co.* v. *Texas & Pacific Ry. Co.*, 241 U. S. 295, 306, 307. *Texas & Pacific Ry. Co.* v. *Cody*, 166 U. S. 606. See further *Smith* v. *Kansas City Title & Trust Co.*, 255 U. S. 180. A more plausible objection is that by the Judicial Code, § 24, sixteenth, except as therein excepted, national banking associations for the purposes of suits against them are to be deemed citizens of the States in which they are respectively located. But we agree with the Court below that the reasons for localizing ordinary commercial banks do not apply to the Federal Reserve Banks created after the Judicial Code was enacted and that the phrase "national banking associations" does not reach forward and include them. That phrase is used to describe the ordinary commercial banks whereas the others are systematically called "Federal Reserve Banks." We see no sufficient ground for supposing that Congress meant to open the questions that the other construction would raise.

On the merits we are of opinion that the Courts below went too far. The question at this stage is not what the plaintiffs may be able to prove, or what may be the reasonable interpretation of the defendants' acts, but whether the plaintiffs have shown a ground for relief if they can prove what they allege. We lay on one side as not necessary to our decision the question of the defendants' powers, and assuming that they act within them consider only whether the use that according to the bill they intend to make of them will infringe the plaintiffs' rights. The defendants say that the holder of a check has a right to present it to the bank upon which it was drawn for payment over the counter, and that however many checks

he may hold he has the same right as to all of them and may present them all at once, whatever his motive or intent. They ask whether a mortgagee would be prevented from foreclosing because he acted from disinterested malevolence and not from a desire to get his money. But the word "right" is one of the most deceptive of pitfalls; it is so easy to slip from a qualified meaning in the premise to an unqualified one in the conclusion. Most rights are qualified. A man has at least as absolute a right to give his own money as he has to demand money from a party that has made no promise to him; yet if he gives it to induce another to steal or murder the purpose of the act makes it a crime.

A bank that receives deposits to be drawn upon by check of course authorizes its depositors to draw checks against their accounts and holders of such checks to present them for payment. When we think of the ordinary case the right of the holder is so unimpeded that it seems to us absolute. But looked at from either side it cannot be so. The interests of business also are recognized as rights, protected against injury to a greater or less extent, and in case of conflict between the claims of business on the one side and of third persons on the other lines have to be drawn that limit both. A man has a right to give advice, but advice given for the sole purpose of injuring another's business and effective on a large scale, might create a cause of action. Banks as we know them could not exist if they could not rely upon averages and lend a large part of the money that they receive from their depositors on the assumption that not more than a certain fraction of it will be demanded on any one day. If without a word of falsehood but acting from what we have called disinterested malevolence a man by persuasion should organize and carry into effect a run upon a bank and ruin it, we cannot doubt that an action would lie. A similar result even if less complete in its effect is to be

expected from the course that the defendants are alleged to intend, and to determine whether they are authorized to follow that course it is not enough to refer to the general right of a holder of checks to present them but it is necessary to consider whether the collection of checks and presenting them in a body for the purpose of breaking down the plaintiffs' business as now conducted is justified by the ulterior purpose in view.

If this were a case of competition in private business it would be hard to admit the justification of self-interest considering the now current opinion as to public policy expressed in statutes and decisions. But this is not private business. The policy of the Federal Reserve Banks is governed by the policy of the United States with regard to them and to these relatively feeble competitors. We do not need aid from the debates upon the statute under which the Reserve Banks exist to assume that the United States did not intend by that statute to sanction this sort of warfare upon legitimate creations of the States.

Decree reversed.

HEITMULLER v. STOKES.

ERROR TO THE COURT OF APPEALS OF THE DISTRICT OF COLUMBIA.

No. 279. Argued April 21, 22, 1921.—Decided May 16, 1921.

The defendant in error, having secured judgment for the possession of his real estate, sold the premises to a stranger, after the case had been removed to this court by writ of error, leaving the defendant in possession. *Held* that, as no controversy remained between the parties, except as to costs, this court would not decide the merits,

but would lay the costs of this writ of error upon the defendant in error and reverse the judgment with instructions to dismiss the complaint. P. 361.

49 App. D. C. 391; 266 Fed. Rep. 1011, reversed.

THE case is stated in the opinion.

Mr. Chapin Brown, with whom *Mr. C. B. Bauman* was on the brief, for plaintiff in error.

Mr. Wharton E. Lester for defendant in error.

MR. JUSTICE DAY delivered the opinion of the court.

Sylvanus Stokes brought suit in the Municipal Court of the District of Columbia to recover from Anna Heitmuller possession of premises number 1505, 22nd Street, Northwest, in the City of Washington, D. C. Stokes claimed to be the purchaser of the premises, and the action was brought against Anna Heitmuller as tenant thereof. Trial was had in the Municipal Court, and judgment rendered in favor of the defendant. Stokes appealed to the Supreme Court of the District of Columbia, and filed an affidavit after the docketing of the appeal as required by Rule 19 of that court. Defendant filed an affidavit setting forth grounds of defense. The Supreme Court entered judgment for the plaintiff, Stokes, upon the ground that the defense as set forth by the defendant was insufficient to defeat the plaintiff's recovery. The case was taken to the Court of Appeals of the District of Columbia, where the judgment of the Supreme Court was affirmed. 49 App. D. C. 391. A writ of error brings the case to this court.

The errors assigned raise constitutional questions as to the validity of the so-called Saulsbury Resolution (40 Stat. 593), and of Rule 19 of the Supreme Court of the District of Columbia. Other errors, not necessary to notice, are also assigned.

The judgment of the Court of Appeals of the District, affirming that of the Supreme Court, was rendered on January 5, 1920, and on January 15, 1920, a writ of error was allowed bringing the case to this court. On February 9, 1920, Stokes, appellee in the Court of Appeals, and defendant in error here, filed a motion to dismiss the writ of error upon the ground that he had sold and conveyed the real estate, the possession of which was the subject-matter in dispute, and had no further interest in the cause except to recover costs and rental due because of the wrongful detention of the property, and upon the further ground that no appeal bond had been filed by the appellant. The Court of Appeals denied the motion. After the allowance of the writ of error, the cause had passed beyond the jurisdiction of that court.

In this court the defendant in error, Stokes, moves to dismiss the writ of error, setting forth as grounds for the motion:

1. The cause of action between the parties hereto has ceased to exist, for that after the judgment of the Court of Appeals of the District of Columbia, appellee sold and conveyed the real estate, the subject-matter of this suit, and therefore is not now entitled to the relief herein sought, namely, the possession of said premises.

2. There is now no actual controversy involving real and substantial rights between the parties to the record, and no subject-matter upon which the judgment of this court can operate.

3. The only question now involved in this appeal is that of costs.

As the action was brought to recover the possession of real estate, and as the defendant in error has, pending review in this court, sold it, we agree with the contention that the case has become moot. The plaintiff in error, so far as the record discloses, is in possession, and the de-

fendant in error, having sold and conveyed the property, a judgment if in his favor will not give him possession of the premises. It has been often held that this court will not decide moot cases. The rule was stated in *Mills* v. *Green*, 159 U. S. 651, 653:

"The duty of this court, as of every other judicial tribunal, is to decide actual controversies by a judgment which can be carried into effect, and not to give opinions upon moot questions or abstract propositions, or to declare principles or rules of law which cannot affect the matter in issue in the case before it. It necessarily follows that when, pending an appeal from the judgment of a lower court, and without any fault of the defendant, an event occurs which renders it impossible for this court, if it should decide the case in favor of the plaintiff, to grant him any effectual relief whatever, the court will not proceed to a formal judgment, but will dismiss the appeal. And such a fact, when not appearing on the record, may be proved by extrinsic evidence. *Lord* v. *Veazie*, 8 How. 251; *California* v. *San Pablo & Tulare Railroad*, 149 U. S. 308." See also *United States* v. *Hamburg-American Co.*, 239 U. S. 466, 476, and cases cited.

Where no controversy remains except as to costs, this court will not pass upon the merits. *Paper-Bag Cases*, 105 U. S. 766, 772.

It remains to be considered what order should be made. Although, owing to the moot character of the issue involved, we may not consider the merits, we are at liberty to make such order as is "most consonant to justice in view of the conditions and circumstances of the particular case." *United States* v. *Hamburg-American Co.*, *supra*, pp. 477, 478.

In the case now before us, without fault of the plaintiff in error, the defendant in error, after the proceedings below, practically ended the controversy by parting with title to the premises, thus causing the case to become moot.

In such case the costs incurred upon the writ of error should be paid by the defendant in error.

Reversed, and remanded to the Court of Appeals of the District of Columbia with direction to remand to the Supreme Court of the District of Columbia with instructions to dismiss the complaint.

KRICHMAN v. UNITED STATES.

CERTIORARI TO THE CIRCUIT COURT OF APPEALS FOR THE SECOND CIRCUIT.

No. 260. Argued March 23, 1921.—Decided May 16, 1921.

A baggage porter employed in a station of a railroad controlled and operated by the United States under the railroad control legislation during the late War, was not a "person acting for or on behalf of the United States in any official function," within the intendment of § 39 of the Criminal Code concerning briberies. P. 365.

263 Fed. Rep. 538, reversed.

CERTIORARI to review a judgment of the Circuit Court of Appeals affirming a judgment of the District Court on a conviction under an indictment. The facts are stated in the opinion.

Mr. Edward Schoen for petitioner.

Mr. W. C. Herron, with whom *Mr. Assistant Attorney General Stewart* was on the brief, for the United States.

MR. JUSTICE DAY delivered the opinion of the court.

Krichman, petitioner, was convicted upon an indictment which charged that, while the Pennsylvania Railroad was under the control of and being operated by the

United States, he offered a bribe to a baggage porter to do an act in violation of his duty, contrary to § 39 of the Criminal Code of the United States; 35 Stat. 1096; 10 Comp. Stats. § 10,203. The section is in the margin.[1]

It appears that the porter was employed at the Pennsylvania terminal in the City of New York. The petitioner offered to bribe the porter to deliver to him certain trunks containing furs, which were checked from the Pennsylvania station to points outside the State of New York, and paid the porter a sum of money, and procured from him delivery of a trunk containing valuable furs.

Petitioner moved in arrest of judgment, claiming that neither the indictment nor the evidence made out any offense under the statute. The District Court denied the motion. 256 Fed. Rep. 974. The judgment was affirmed by the Circuit Court of Appeals for the Second Circuit.

---

[1] Section 39 is as follows:

"Whoever shall promise, offer, or give, or cause or procure to be promised, offered, or given, any money or other thing of value, or shall make or tender any contract, undertaking, obligation, gratuity, or security for the payment of money, or for the delivery or conveyance of anything of value, to any officer of the United States, or to any person acting for or on behalf of the United States in any official function, under or by authority of any department or office of the Government thereof, or to any officer or person acting for or on behalf of either House of Congress, or of any committee of either House, or both Houses thereof, with intent to influence his decision or action on any question, matter, cause, or proceeding which may at any time be pending, or which may by law be brought before him in his official capacity, or in his place of trust or profit, or with intent to influence him to commit or aid in committing, or to collude in, or allow, any fraud, or make opportunity for the commission of any fraud, on the United States, or to induce him to do or omit to do any act in violation of his lawful duty, shall be fined not more than three times the amount of money or value of the thing so offered, promised, given, made, or tendered, or caused or procured to be so offered, promised, given, made, or tendered, and imprisoned not more than three years."

263 Fed. Rep. 538. The case then came to this court by writ of certiorari.

The statutes and executive orders concerning railroads are stated in *Northern Pacific Ry. Co.* v. *North Dakota*, 250 U. S. 135. By the statute of August 29, 1916, § 1, c. 418, 39 Stat. 645, the President was given power to take possession and assume control of the transportation systems of the country. After the declarations of war with Germany (April 6, 1917) and Austria (December 7, 1917), the President issued a proclamation of December 26, 1917, taking possession of the transportation systems within the boundaries of the United States. 40 Stat. 1733; Comp. Stats. 1918, § 1974a. The proclamation appointed a Director General of Railroads with full authority to take control of the systems, and to operate and administer them. (See Act of March 21, 1918, c. 25, 40 Stat. 451, for the full authority given the Director General by the proclamation of the President of March 29, 1918. Comp. Stats., 1918, § 3115$^{3}/_{4}$ H.)

In order to sustain the conviction the bribe must have been given to an officer of the United States, or to a person acting for or on behalf of the United States in an official function under or by the authority of a department or office of the Government.

Clearly, Krichman was not an officer of the United States. *United States* v. *Maurice*, 26 Fed. Cas. No. 15747; *United States* v. *Hartwell*, 6 Wall. 385, 393. We need not dwell upon this point, as the Government concedes that the porter was not an officer within the meaning of the statute.

The point to be decided depends upon whether when the bribe was offered to the porter, he was acting for the United States in an official function. The decided cases do not afford much aid in reaching a solution of this problem, and in our view the cases cited in the opinions in the courts below throw little light upon the subject.

The statute creating the offense was passed long before there was any thought of the Government taking over the railroads. That does not prevent its application if the thing done offends against it. It is, however, a circumstance proper to be considered in determining whether the situation is one intended to be dealt with by Congress.

The act aims to punish the attempted bribery or bribery of officials and those exercising official functions under or by the authority of a department or office of the Government. Not every person performing any service for the Government, however humble, is embraced within the terms of the statute. It includes those, not officers, who are performing duties of an official character. As was well suggested by Judge Ward in his dissenting opinion in the Circuit Court of Appeals, not every employee of the Government is covered by the act, but a limitation is made applying to those acting in official functions. And he added: "The construction adopted by the court gives these words no meaning. They might as well, or indeed better, have been omitted, because windowcleaners, scrubwomen, elevator boys, doorkeepers, pages—in short, any one employed by the United States to do anything—is included."

The Government admits that the construction contended for will include the employees suggested by Judge Ward. Indeed, the construction given by the courts below would bring within the statute every employee acting under the Director General in the operation of the railroads. We are unable to accept this construction of a criminal statute.

In *United States* v. *Strang*, decided at this term, 254 U. S. 491, this court held that the Emergency Fleet Corporation, organized by the Shipping Board, and authorized by the President to exercise a portion of the power granted to him under the Act of June 15, 1917, c. 29, 40 Stat. 182,

was a separate entity from the Government which owned all of its stock, and that an inspector of the Shipping Board was not an agent of the United States within the meaning of § 41 of the Criminal Code, Comp. Stats. § 10,205, making it an offense for any officer or agent of any corporation, etc., and any member or agent of any firm, or person directly or indirectly interested in the pecuniary profits or contracts of such corporation, etc., to be employed or to act as an officer or agent of the United States for the transaction of business with such corporation, etc. Subsequently the statute was amended so as to bring the United States Shipping Board Emergency Fleet Corporation within its terms as a governmental establishment, and, later, to make it an offense to defraud or to conspire to defraud any corporation in which the United States owned stock. So, in our view, if § 39 is to include every governmental employee, it must be amended by act of Congress.

It is true that in the emergencies of war the Government took over the operation of the railroads, and placed them under the control of the President, acting by his chosen Director General, who was given full authority to avail himself of the services of railroad officials, directors, employees, etc., with ample authority over all. But we cannot believe that this action brought every service, however remote from the exertion of official authority, into the exercise of an official function within the meaning of the statute. We are constrained to the conclusion that the construction given in the courts below, and insisted upon by the Government, practically recasts the statute from one embracing officials, and those discharging official functions, into one including every person discharging any sort of duty while the Government is in control of the work.

The Government admits that the statute is ambiguous. While criminal statutes are to be given a reasonable con-

struction, ambiguities are not to be solved so as to embrace offenses not clearly within the law. We are unable to remedy the uncertainties of this statute by attributing to Congress an intention to include a baggage porter with those who discharge official duties in the operation of a railroad controlled by an officer of the Government.

It follows that the judgment of the Circuit Court of Appeals must be

Reversed.

DILLON *v.* GLOSS, DEPUTY COLLECTOR OF UNITED STATES INTERNAL REVENUE.

APPEAL FROM THE DISTRICT COURT OF THE UNITED STATES FOR THE NORTHERN DISTRICT OF CALIFORNIA.

No. 251. Argued March 22, 1921.—Decided May 16, 1921.

1. Article V of the Constitution implies that amendments submitted thereunder must be ratified, if at all, within some reasonable time after their proposal. Pp. 371, 374.
2. Under this Article, Congress, in proposing an amendment, may fix a reasonable time for ratification. P. 375.
3. The period of seven years, fixed by Congress in the resolution proposing the Eighteenth Amendment, was reasonable. P. 376.
4. The Eighteenth Amendment became a part of the Constitution on January 16, 1919, when, as the court notices judicially, its ratification in the state legislatures was consummated; not on January 29, 1919, when the ratification was proclaimed by the Secretary of State. P. 376.
5. As this Amendment, by its own terms, was to go into effect one year after being ratified, §§ 3 and 26, Title II, of the National Prohibition Act, which, by § 21, Title III, were to be in force from and after the effective date of the Amendment, were in force on January 16, 1920. P. 376.

262 Fed. Rep. 563, affirmed.

THE case is stated in the opinion.

Mr. Levi Cooke, with whom *Mr. Theodore A. Bell* and *Mr. George R. Beneman* were on the brief, for appellant:

The Eighteenth Amendment is invalid because of the extra-constitutional provision of the third section. Congress has no power to limit the time of deliberation or otherwise control what the legislatures of the States shall do in their deliberation. Any attempt to limit voids the proposal.

The legislative history of the Amendment shows that without § 3 the proposal would not have passed the Senate. Cong. Rec., 65th Cong., 1st sess., pp. 5648–5666; Cong. Rec., 65th Cong., 2d sess., p. 477.

The same taint attended the passage of the amendment in the House, because there what is now § 3 was considered and the limitation changed from six to seven years, and it is impossible to say now that without the attempted time limitation upon the States two-thirds of the House would have assented to the proposal of the amendment.

The fact that thirty-six States thus ratified within the time emphasizes the evil that was accomplished by the limitation, and can in no way be invoked to suggest that the third section became surplusage in view of this result attained so well within the seven-year limitation attempted to be set by Congress. On the contrary, the fact of there being a time limitation tended to destroy any deliberation by the States and to enable the faction which was pressing for ratification of the amendment to urge immediate indeliberate action in order to avoid the possibility of the time limitation expiring without thirty-six States having made ratification.

The history of the times discloses, if the court may take judicial notice thereof, that legislators elected prior to the submission by Congress were urged to act forthwith, without awaiting the election of legislators by an electorate aware of the pendency of the congressional proposal, and that in some legislatures ratification was secured without

debate in the precipitate action urged by the faction advocating the amendment. The speed with which the amendment was disposed of by the state legislatures tends to establish the absence of deliberation; and in any view the fact stands that the States were acting in the presence of a limitation fixed by Congress, violative of Art. V, in terms unheard of in the history of the country, and contrary to any procedure sanctioned by the organic law, with the very nature and structure of which both the Congress and the state legislatures were dealing. See 2 Story, Const., 3d ed., § 1830.

The National Prohibition Act should be found to have become effective, if at all, January 29, 1920, a year after ratification of the amendment was proclaimed and made known to the public. The proclamation of the Secretary of State must be treated as the publication of the fact of ratification, under Rev. Stats., § 205, of which all persons may be considered to be charged with knowledge.

Mrs. Annette Abbott Adams, Assistant Attorney General, for appellee.

MR. JUSTICE VAN DEVANTER delivered the opinion of the court.

This is an appeal from an order denying a petition for a writ of *habeas corpus*. 262 Fed. Rep. 563. The petitioner was in custody under § 26 of Title II of the National Prohibition Act, c. 85, 41 Stat. 305, on a charge of transporting intoxicating liquor in violation of § 3 of that title, and by his petition sought to be discharged on several grounds, all but two of which were abandoned after the decision in *National Prohibition Cases*, 253 U. S. 350. The remaining grounds are, first, that the Eighteenth Amendment to the Constitution, to enforce which Title II of the act was adopted, is invalid because the congressional

resolution, 40 Stat. 1050, proposing the Amendment, declared that it should be inoperative unless ratified within seven years; and, secondly, that, in any event, the provisions of the act which the petitioner was charged with violating, and under which he was arrested, had not gone into effect at the time of the asserted violation nor at the time of the arrest.

The power to amend the Constitution and the mode of exerting it are dealt with in Article V, which reads:

"The Congress, whenever two-thirds of both Houses shall deem it necessary, shall propose amendments of this Constitution, or, on the application of the legislatures of two-thirds of the several States, shall call a convention for proposing amendments, which, in either case, shall be valid to all intents and purposes, as part of this Constitution, when ratified by the legislatures of three-fourths of the several States, or by conventions in three-fourths thereof, as the one or the other mode of ratification may be proposed by the Congress; Provided that no amendment which may be made prior to the year one thousand eight hundred and eight shall in any manner affect the first and fourth clauses in the ninth section of the first article; and that no State, without its consent, shall be deprived of its equal suffrage in the Senate."

It will be seen that this article says nothing about the time within which ratification may be had—neither that it shall be unlimited nor that it shall be fixed by Congress. What then is the reasonable inference or implication? Is it that ratification may be had at any time, as within a few years, a century or even a longer period; or that it must be had within some reasonable period which Congress is left free to define? Neither the debates in the federal convention which framed the Constitution nor those in the state conventions which ratified it shed any light on the question.

The proposal for the Eighteenth Amendment is the

first in which a definite period for ratification was fixed.[1] Theretofore twenty-one amendments had been proposed by Congress and seventeen of these had been ratified by the legislatures of three-fourths of the States,—some within a single year after their proposal and all within four years. Each of the remaining four had been ratified in some of the States, but not in a sufficient number.[2] Eighty years after the partial ratification of one an effort was made to complete its ratification and the legislature of Ohio passed a joint resolution to that end,[3] after which the effort was abandoned. Two, after ratification in one less than the required number of States, had lain dormant for a century.[4] The other, proposed March 2, 1861, declared: "No amendment shall be made to the Constitution which will authorize or give to Congress the power to abolish or interfere, within any State, with the domestic institutions thereof, including that of persons held to labor or service by the laws of said State." [5] Its principal purpose was to protect slavery and at the time of its proposal and partial ratification it was a subject of absorbing interest, but after the adoption of the Thirteenth Amendment it was generally forgotten. Whether an amendment

---

[1] Some consideration had been given to the subject before, but without any definite action. Cong. Globe, 39th Cong., 1st sess., 2771; 40th Cong., 3d sess., 912, 1040, 1309–1314.

[2] Watson on the Constitution, vol. 2, pp. 1676–1679; House Doc., 54th Cong., 2d sess., No. 353, pt. 2, p. 300.

[3] House Doc., 54th Cong., 2d sess., No. 353, pt. 2, p. 317 (No. 243); Ohio Senate Journal, 1873, pp. 590, 666-667, 678; Ohio House Journal, 1873, pp. 848, 849. A committee charged with the preliminary consideration of the joint resolution reported that they were divided in opinion on the question of the validity of a ratification after so great a lapse of time.

[4] House Doc., 54th Cong., 2d sess., No. 353, pt. 2, pp. 300, 320 (No. 295), 329 (No. 399).

[5] 12 Stat. 251; House Doc., 54th Cong., 2d sess., No. 353, pt. 2, pp. 195–197, 363 (No. 931), 369 (No. 1025).

proposed without fixing any time for ratification, and which after favorable action in less than the required number of States had lain dormant for many years, could be resurrected and its ratification completed had been mooted on several occasions, but was still an open question.

These were the circumstances in the light of which Congress in proposing the Eighteenth Amendment fixed seven years as the period for ratification. Whether this could be done was questioned at the time and debated at length, but the prevailing view in both houses was that some limitation was intended and that seven years was a reasonable period.[1]

That the Constitution contains no express provision on the subject is not in itself controlling; for with the Constitution, as with a statute or other written instrument, what is reasonably implied is as much a part of it as what is expressed.[2] An examination of Article V discloses that it is intended to invest Congress with a wide range of power in proposing amendments. Passing a provision long since expired,[3] it subjects this power to only two restrictions: one that the proposal shall have the approval of two-thirds of both houses, and the other excluding any amendment which will deprive any State, without

---

[1] Cong. Rec., 65th Cong., 1st sess., pp. 5648–5651, 5652–5653, 5658–5661; 2d sess., pp. 423–425, 428, 436, 443, 444, 445–446, 463, 469, 477–478.

[2] *United States* v. *Babbit*, 1 Black, 55, 61; *Ex parte Yarbrough*, 110 U. S. 651, 658; *McHenry* v. *Alford*, 168 U. S. 651, 672; *South Carolina* v. *United States*, 199 U. S. 437, 451; *Luria* v. *United States*, 231 U. S. 9, 24; *The Pesaro*, 255 U. S. 216.

[3] Article V, as before shown, contained a provision that "No amendment which shall be made prior to the year one thousand eight hundred and eight shall in any manner affect the first and fourth clauses in the ninth section of the first article." One of the clauses named covered the migration and importation of slaves and the other deals with direct taxes.

its consent, of its equal suffrage in the Senate.[1] A further mode of proposal—as yet never invoked—is provided, which is, that on the application of two-thirds of the States Congress shall call a convention for the purpose. When proposed in either mode amendments to be effective must be ratified by the legislatures, or by conventions, in three-fourths of the States, "as the one or the other mode of ratification may be proposed by the Congress." Thus the people of the United States, by whom the Constitution was ordained and established, have made it a condition to amending that instrument that the amendment be submitted to representative assemblies in the several States and be ratified in three-fourths of them. The plain meaning of this is (a) that all amendments must have the sanction of the people of the United States, the original fountain of power, acting through representative assemblies, and (b) that ratification by these assemblies in three-fourths of the States shall be taken as a decisive expression of the people's will and be binding on all.[2]

We do not find anything in the Article which suggests that an amendment once proposed is to be open to ratification for all time, or that ratification in some of the States may be separated from that in others by many years and yet be effective. We do find that which strongly suggests the contrary. First, proposal and ratification are not treated as unrelated acts but as succeeding steps

---

[1] When the federal convention adopted Article V a motion to include another restriction forbidding any amendment whereby a State, without its consent, would "be affected in its internal police" was decisively voted down. The vote was: yeas 3—Connecticut, New Jersey, Delaware; nays 8—New Hampshire, Massachusetts, Pennsylvania, Maryland, Virginia, North Carolina, South Carolina, Georgia. Elliot's Debates, vol. 5, pp. 551, 552.

[2] See *Martin* v. *Hunter's Lessee*, 1 Wheat. 304, 324–325; *McCulloch* v. *Maryland*, 4 Wheat. 316, 402–404; *Cohens* v. *Virginia*, 6 Wheat. 264, 413–414; *Dodge* v. *Woolsey*, 18 How. 331, 347–348; *Hawke* v. *Smith*, 253 U. S. 221; Story on the Constitution, 5th ed., §§ 362–363, 463–465.

in a single endeavor, the natural inference being that they are not to be widely separated in time. Secondly, it is only when there is deemed to be a necessity therefor that amendments are to be proposed, the reasonable implication being that when proposed they are to be considered and disposed of presently. Thirdly, as ratification is but the expression of the approbation of the people and is to be effective when had in three-fourths of the States, there is a fair implication that it must be sufficiently contemporaneous in that number of States to reflect the will of the people in all sections at relatively the same period, which of course ratification scattered through a long series of years would not do. These considerations and the general purport and spirit of the Article lead to the conclusion expressed by Judge Jameson [1] "that an alteration of the Constitution proposed today has relation to the sentiment and the felt needs of today, and that, if not ratified early while that sentiment may fairly be supposed to exist, it ought to be regarded as waived, and not again to be voted upon, unless a second time proposed by Congress." That this is the better conclusion becomes even more manifest when what is comprehended in the other view is considered; for, according to it, four amendments proposed long ago—two in 1789, one in 1810 and one in 1861—are still pending and in a situation where their ratification in some of the States many years since by representatives of generations now largely forgotten may be effectively supplemented in enough more States to make three-fourths by representatives of the present or some future generation. To that view few would be able to subscribe, and in our opinion it is quite untenable. We conclude that the fair inference or implication from Article V is that the ratification must be within some reasonable time after the proposal.

Of the power of Congress, keeping within reasonable

[1] Jameson on Constitutional Conventions, 4th ed., § 585.

limits, to fix a definite period for the ratification we entertain no doubt. As a rule the Constitution speaks in general terms, leaving Congress to deal with subsidiary matters of detail as the public interests and changing conditions may require;[1] and Article V is no exception to the rule. Whether a definite period for ratification shall be fixed so that all may know what it is and speculation on what is a reasonable time may be avoided, is, in our opinion, a matter of detail which Congress may determine as an incident of its power to designate the mode of ratification. It is not questioned that seven years, the period fixed in this instance, was reasonable, if power existed to fix a definite time; nor could it well be questioned considering the periods within which prior amendments were ratified.

The provisions of the act which the petitioner was charged with violating and under which he was arrested (Title II, §§ 3, 26) were by the terms of the act (Title III, § 21) to be in force from and after the date when the Eighteenth Amendment should go into effect, and the latter by its own terms was to go into effect one year after being ratified. Its ratification, of which we take judicial notice, was consummated January 16, 1919.[2] That the Secretary of State did not proclaim its ratification until January 29, 1919,[3] is not material, for the date of its consummation, and not that on which it is proclaimed, controls. It follows that the provisions of the act with which the petitioner is concerned went into effect January

---

[1] *Martin* v. *Hunter's Lessee*, 1 Wheat. 304, 326; *McCulloch* v. *Maryland*, 4 Wheat. 316, 407.

[2] Sen. Doc., No. 169, 66th Cong., 2d sess.; Ark. Gen. Acts, 1919, p. 512; Ark. House Journal, 1919, p. 10; Ark. Sen. Journal, 1919, p. 16; Wyo. Sen. Journal, 1919, pp. 26–27; Wyo. House Journal, 1919, pp. 27–28; Mo. Sen. Journal, 1919, pp. 17–18; Mo. House Journal, 1919, p. 40.

[3] 40 Stat. 1941.

16, 1920. His alleged offense and his arrest were on the following day; so his claim that those provisions had not gone into effect at the time is not well grounded.

Final order affirmed.

LABELLE IRON WORKS v. UNITED STATES.

APPEAL FROM THE COURT OF CLAIMS.

No. 453. Argued January 6, 7, 1921.—Decided May 16, 1921.

1. The Act of October 3, 1917, c. 63, Tit. II, 40 Stat. 300, 302, in providing for a deduction of a percentage of "invested capital" before computation of the "excess profits" tax upon the income of a domestic corporation, does not mean to include in its definition of invested capital (§ 207) any marking up of the valuation of assets upon the corporate books to correspond with increase of market value or any paper transaction by which new shares are issued in exchange for old ones in the same corporation but which is not in substance and effect a new acquisition of capital property by it. Pp. 386, 389.
2. A corporation, having acquired ore lands for $190,000, proved, by extensive explorations and developments, that their actual cash value was over $10,105,400; thereupon, in 1912, it increased their book valuation by adding $10,000,000, as surplus, and, based thereon, declared a stock dividend for $9,915,400, which was carried out by surrender and cancellation of all the common stock, of like aggregate par value, and the issuance of one share each of preferred and new common stock for each share of the stock surrendered. The increased value of the ore lands persisted when an excess profits tax was laid under the Act of 1917, *supra*. *Held:* That such increase of value was not included in "invested capital" under § 207 (a) (3), as "paid in or earned surplus and undivided profits," (though an amount equal to the cost of the exploration and development might be), pp. 386, 390; nor under *id.* (2) as "the actual cash value of tangible property paid in other than cash, for the stock or shares" of the corporation. Pp. 386, 390.
3. The Fifth Amendment having no "equal protection" clause, the

only rule of uniformity prescribed by the Constitution respecting duties, imposts and excises is the territorial uniformity required by Art. I, § 8. P. 391.

4. There were reasons, both theoretical and practical, including that of convenience in administration, for basing "invested capital" upon actual costs to the exclusion of higher estimated values; and resulting inequalities to corporations differently situated do not make out an arbitrary discrimination, amounting to confiscation and violating the due process clause of the Fifth Amendment. P. 392.

55 Ct. Clms. 462, affirmed.

APPEAL from a judgment of the Court of Claims disallowing a claim for a refund of money alleged to have been unlawfully exacted as an excess profits tax. The facts are stated in the opinion, *post*, 383.

Mr. Charles McCamic and *Mr. Charles E. Hughes*, with whom *Mr. Edward B. Burling* and *Mr. Jas. Morgan Clarke* were on the briefs, for appellant:

By the correct construction of the act the appellant is entitled to include as paid in or earned surplus and undivided profits, under § 207 (a) (3) of the act, the increase in the value of the ore lands due to the discovery of the ore bodies and to the natural increase in the market price of ore. The act contains no definition of the words "paid in or earned surplus and undivided profits."

Statutes imposing taxes are to be construed in favor of the taxpayer; the language employed is to be given its ordinary meaning; they are to be construed according to the spirit rather than the letter when the letter would make them palpably unjust; construed according to these rules the invested capital of appellant should include all its outstanding stock where that is represented by property of an actual cash value not less than the par value of the outstanding stock.

The ordinary meaning of the words "paid in or earned surplus and undivided profits," includes appreciation in

value. R. J. Bennett, Corporation Accounting, 1917, § 291, pp. 334, 336; Arthur Lowes Dickinson, Accounting Practice and Procedure, 1917, p. 62; Henry Rand Hatfield, Modern Accounting, 1916, p. 237; Harry C. Bentley, The Science of Accounts, 1913, § 36, p. 24; Leo Greendlinger, Financial and Business Statements (Alexander Hamilton Institute, 1917), vol. 22, pp. 195, 196; Year Book, 1911, p. 124.

Text writers on law and decided cases give the same definition of surplus and undivided profits as the accountants. Machen, Modern Law of Corporations, vol. II, pp. 1092, 1095; Morawetz, Private Corporations, 2d ed., vol. I, p. 412; Thompson, Corporations, 2d ed., § 5307; Cook, Corporations, 7th ed., vol. II, § 536; *Park* v. *Grant Locomotive Works*, 40 N. J. Eq. 114, 121.

The Department's definition, excluding appreciation from surplus, when analyzed closely, shows itself to be unsound; for it is admitted that when the property is sold the profit may become a part of surplus. But the sale does not create the profit. *Williams* v. *Western Union Telegraph Co.*, 93 N. Y. 162, 186, 191; *People* v. *Board of Commissioners*, 76 N. Y. 64, 74; *People* v. *Barker*, 165 N. Y. 305; *McGinnis* v. *O'Connor*, 72 Atl. Rep. 614; *Mangham* v. *State*, 11 Ga. App. 440; *Hutchinson* v. *Curtiss*, 92 N. Y. S. 70, 74; *Simcoke* v. *Sayre*, 148 Iowa, 132; *Anderson* v. *Farmers' Loan & Trust Co.*, 241 Fed. Rep. 322, 326; *Roberts* v. *Roberts-Wicks Co.*, 184 N. Y. 257; *Hubbard* v. *Weare*, 79 Iowa, 678; *Miller* v. *Bradish*, 69 Iowa, 278; *Equitable Life Assurance Society* v. *Union Pacific R. R. Co.*, 212 N. Y. 360.

The word "earned" does not limit the surplus which is to be included in invested capital. The statute merely contrasts "earned" with "paid in" surplus. The phrase in the act is "paid in or earned surplus and undivided profits." The meaning of "earned" is not the same as "realized." It includes in meaning "to acquire the

benefit of although not realized." *Stevens* v. *United States Steel Corporation*, 68 N. J. Eq. 373, 380; *Lewis's Estate*, 156 Pa. St. 337; *Nuding* v. *Urich*, 169 Pa. St. 289.

Our contention on this subject is that if the appreciation is surplus at all it is necessarily "paid in or earned" surplus. The word "earned" was probably used in contrast to "paid in" in the clause "paid in or earned surplus and undivided profits," and was perhaps intended to emphasize the thought that the surplus must be real and not fictitious.

If it be admitted that appreciation after realization is earned surplus, then it must be admitted that appreciation is earned surplus before the property is sold. The sale does not create the earning; it is the gradual increase in value which is the earning.

But if the word "earned" has any such narrow meaning as is contended for, that narrow meaning is not applicable to appellant in view of the facts admitted by the demurrer. The petition alleges that after the acquisition of the ore properties, extensive exploration and development work was carried on, and that by 1912, and at all times thereafter to 1917, the actual cash value of the ore lands was not less than $10,105,400.

New capital stock of the company was issued because the value of the ores justified it and this was a realization of the increased values.

This court in construing the 1909 corporation excise tax law, and the 1913 income tax law, held that appreciation accruing before the incidence of the tax was capital. The word "capital" as used in these cases must include "surplus." *Hays* v. *Gauley Mountain Coal Co.*, 247 U. S. 189; *Doyle* v. *Mitchell Bros. Co.*, 247 U. S. 179, 187; *Southern Pacific Co.* v. *Lowe*, 247 U. S. 330, 335; *Towne* v. *Eisner*, 245 U. S. 418; *Lynch* v. *Turrish*, 247 U. S. 221; *Lynch* v. *Hornby*, 247 U. S 339.

The construction here intended for will impose no

heavier burden on the Department than the construction of the Government.

The stock of the company, issued in 1912, was fully paid for, either by the tangible assets including the ore lands at their increased value, or the certificates of the old common stock. In either case tangible property was paid in for shares with an actual cash value within § 207 (a) (2) equal to $19,830,800,—and the company is accordingly entitled to include the full amount in its invested capital. *Williams* v. *Western Union Telegraph Co.*, 93 N. Y. 162, 190. In its essence the transaction in 1912 amounted to this: The shareholders surrendered all their old shares and thereupon, being in effect the owners of all the assets, "paid in" those assets to the corporation in exchange for the new stock issue.

The construction placed upon the act by the Department would create a wholly baseless and arbitrary discrimination amounting to a deprivation of property without due process of law. Such a construction is to be avoided if the act is to be constitutional.

This court has said that if there were arbitrary confiscation in a taxing law of Congress there would be a want of due process. *Knowlton* v. *Moore*, 178 U. S. 41, 77; *Brushaber* v. *Union Pacific R. R. Co.*, 240 U. S. 1, 24, 25. See also, *Wagner* v. *Baltimore*, 239 U. S. 207; *Twining* v. *New Jersey*, 211 U. S. 78; *McCray* v. *United States*, 195 U. S. 27; *Flint* v. *Stone Tracy Co.*, 220 U. S. 107; *Billings* v. *United States*, 232 U. S. 261. The foregoing cases make it clear that a taxing law which imposes a tax based on a wholly arbitrary classification is void within the Fifth Amendment. To be sure, in all the cases the court found that the classification was not of that character. But the discussion in all is based on the implied assumption that if the classification were of that arbitrary character the law would be invalid.

The due process clause in the Fifth Amendment means

the same thing as the due process clause in the Fourteenth Amendment. *Carroll* v. *Greenwich Insurance Co.*, 199 U. S. 401, 410; *Tonawanda* v. *Lyon*, 181 U. S. 389, 392, 393; *French* v. *Barber Asphalt Paving Co.*, 181 U. S. 324; *Flint* v. *Stone Tracy Co.*, 220 U. S. 107; *Hibben* v. *Smith*, 191 U. S. 310, 325, 326.

In *Gast Realty Co.* v. *Schneider Granite Co.*, 240 U. S. 55, and in other cases in this court, tax laws of States have been held so arbitrary and baseless as to violate the Fourteenth Amendment. *Looney* v. *Crane Co.*, 245 U. S. 178; *International Paper Co.* v. *Massachusetts*, 246 U. S. 135; *Southern Ry. Co.* v. *Greene*, 216 U. S. 400.

The present law as construed by the Department is utterly arbitrary, and therefore invalid, because the tax depends largely upon the cost of the taxpayer's property so that two taxpayers who have the same income, and property of equal value, will pay wholly different taxes if the cost of the property is different.

The Solicitor General for the United States.

Mr. Frank Hagerman and *Mr. Massey Holmes*, by leave of court, filed a brief as *amici curiæ*.

Mr. Jesse Andrews, by leave of court, filed a brief as *amicus curiæ*.

Mr. William D. Guthrie, *Mr. Henry M. Ward*, *Mr. Henry F. Parmelee* and *Mr. Langdon P. Marvin*, by leave of court, filed a brief as *amici curiæ*.

Mr. Clark J. Milliron, *Mr. James M. Proctor* and *Mr. Edward S. Brashears*, by leave of court, filed a brief as *amici curiæ*.

Mr. Clarence N. Goodwin, by leave of court, filed a brief as *amicus curiæ*.

Mr. Armwell L. Cooper, Mr. Ellison A. Neel and *Mr. John S. Wright*, by leave of court, filed a brief as *amici curiæ*.

MR. JUSTICE PITNEY delivered the opinion of the court.

The Court of Claims dismissed appellant's petition which claimed a refund of $1,081,184.61, alleged to have been erroneously assessed and exacted as an "excess profits tax" under Title II of the Revenue Act of 1917 (Act of October 3, 1917, c. 63, 40 Stat. 300, 302, *et seq.*). The case involves the construction and application of those provisions by which the deduction from income, for the purposes of the tax, is measured by the "invested capital" of the taxpayer; and a question is raised as to the constitutionality of the act as construed and applied.

Title I of the act imposed "War Income Taxes" upon individuals and corporations in addition to those imposed by Act of September 8, 1916, c. 463, 39 Stat. 756. Title II provided for the levying of "War Excess Profits Taxes" upon corporations, partnerships, and individuals. As applied to domestic corporations, the scheme of this Title was that, after providing for a deduction from income (§ 203, p. 304) equal to the same percentage of the invested capital for the taxable year which the average amount of the annual net income of the trade or business during the prewar period (the years 1911, 1912, and 1913) was of the invested capital for that period, but not less than 7 nor more than 9 per cent., plus $3,000, it imposed (§ 201, p. 303), in addition to other taxes, a graduated tax upon the net income beyond the deduction, commencing with 20 per centum of such net income above the deduction but not above 15 per centum of the invested capital for the taxable year, and running as high as 60 per centum of the net income in excess of 33 per centum of such capital. It applied to "all trades or businesses," with exceptions not now material (p. 303).

What should be deemed "invested capital" was defined by § 207 (p. 306), which, so far as pertinent, is set forth in the margin.[1]

The case was decided upon a demurrer to the petition, in which the facts were stated as follows: Appellant is a domestic corporation and, prior to the year 1904, acquired ore lands for which it paid the sum of $190,000. Between that time and the year 1912 extensive explorations and developments were carried on (the cost of which is not stated), and it was proved that the lands contained large bodies of ore and had an actual cash value

[1] SEC. 207. That as used in this title, the term "invested capital" for any year means the average invested capital for the year, as defined and limited in this title, averaged monthly.

As used in this title "invested capital" does not include stocks, bonds (other than obligations of the United States), or other assets, the income from which is not subject to the tax imposed by this title, nor money or other property borrowed, and means, subject to the above limitations:

(a) In the case of a corporation or partnership: (1) Actual cash paid in, (2) the actual cash value of tangible property paid in other than cash, for stock or shares in such corporation or partnership, at the time of such payment (but in case such tangible property was paid in prior to January first, nineteen hundred and fourteen, the actual cash value of such property as of January first, nineteen hundred and fourteen. but in no case to exceed the par value of the original stock or shares specifically issued therefor), and (3) paid in or earned surplus and undivided profits used or employed in the business, exclusive of undivided profits earned during the taxable year: *Provided*, That (a) the actual cash value of patents and copyrights paid in for stock or shares in such corporation or partnership, at the time of such payment, shall be included as invested capital, but not to exceed the par value of such stock or shares at the time of such payment, and (b) the good will, trade-marks, trade brands, the franchise of a corporation or partnership, or other intangible property, shall be included as invested capital if the corporation or partnership made payment bona fide therefor specifically as such in cash or tangible property, the value of such good will, trade-mark, trade brand, franchise, or intangible property, not to exceed the actual cash or actual cash value of the tangible property paid therefor at the time of such payment; but good

not less than $10,105,400; and at all times during the years 1912 to 1917, inclusive, their actual cash value was not less than the sum last mentioned. In the year 1912 the company increased the valuation of said lands upon its books by adding thereto the sum of $10,000,000, which it carried to surplus, and thereupon, in the same year, declared a stock dividend in the sum of $9,915,400, representing the increase in value of the ore lands. Theretofore appellant's capital stock had consisted of shares issued, all of one class, having a par value of $9,915,400. The declaration of the stock dividend was carried out by the surrender to the company of all the outstanding stock, and its cancellation, and the exchange of one share of new common and one share of new preferred stock for each share of the original stock.

In returning its annual net income for the year 1917 the company stated its invested capital to be $26,322,-904.14, in which was included the sum of $10,105,400 as representing the value of its ore lands. The Commissioner of Internal Revenue caused a reassessment to be made, based upon a reduction of the invested capital to $16,407,507.14; the difference ($9,915,400) being the increase in the value of the ore lands already mentioned. The result was an additional tax of $1,081,184.61, which, having been paid, was made the subject of a claim for refund; and this having been considered and rejected by

---

will, trade-marks, trade brands, franchise of a corporation or partnership, or other intangible property, bona fide purchased, prior to March third, nineteen hundred and seventeen, for and with interests or shares in a partnership or for and with shares in the capital stock of a corporation (issued prior to March third, nineteen hundred and seventeen), in an amount not to exceed, on March third, nineteen hundred and seventeen, twenty per centum of the total interests or shares in the partnership or of the total shares of the capital stock of the corporation, shall be included in invested capital at a value not to exceed the actual cash value at the time of such purchase, and in case of issue of stock therefor not to exceed the par value of such stock; . . .

the Commissioner, there followed a suit in the Court of Claims, with the result already mentioned.

Appellant's contentions, in brief, are, first, that the increased value of the ore lands, placed upon the company's books in 1912, ought to be included in invested capital under § 207 (a) (3), as "paid in or earned surplus and undivided profits." Second, that within the meaning of clause (2), which provides that invested capital shall include "the actual cash value of tangible property paid in other than cash, for stock or shares in such corporation," the stock of the company issued in 1912, consisting of $9,915,400 of preferred stock and an equal amount of common, was fully paid for: either (a) by the tangible assets, including the ore properties at their increased value, or (b) by the surrender of all the certificates representing the old common stock, which, it is said, had an actual cash value equal to double its par. And, third, that the construction put upon the act by the Treasury Department, based, as it is said, not upon value but upon the single feature of cost, disregarding the time of acquisition, would render the act unconstitutional as a deprivation of property without due process under the Fifth Amendment, because so arbitrary as to amount in effect to confiscation; and hence that this construction must be avoided.

Reading the entire language of § 207 in the light of the circumstances that surrounded the passage of the act, we think its meaning as to "invested capital" is entirely clear. The great war in Europe had been in progress since the year 1914, and the manufacture and export of war supplies and other material for the belligerent powers had stimulated many lines of trade and business in this country, resulting in large profits as compared with the period before the war, and as compared with ordinary returns upon the capital embarked. The United States had become directly involved in the conflict in the Spring

of 1917, necessitating heavy increases in taxation; at the same time manufactures and trade of every description were rendered even more active, and in certain lines more profitable, than before, so that the unusual gains derived therefrom formed a natural subject for special taxation.

On the eve of our entry, and in order to provide a "Special Preparedness Fund" for army, navy, and fortification purposes, an act (March 3, 1917, c. 159, 39 Stat. 1000) was passed, which, in Title II, provided for an excess profits tax on corporations and partnerships equal to 8 per centum of the amount by which their net income exceeded $5,000 plus 8 per centum of the "actual capital invested"; and, in § 202 (p. 1001), defined this term to mean "(1) actual cash paid in, (2) the actual cash value, at the time of payment, of assets other than cash paid in, and (3) paid in or earned surplus and undivided profits used or employed in the business," but not to include money or other property borrowed.

The Revenue Act of October 3, 1917, passed after we had become engaged in the war, took the place of the Act of March 3, and embodied a "War Excess Profits Tax," with higher percentages imposed upon the income in excess of deductions and a more particular definition of terms. A scrutiny of the particular provisions of § 207 shows that it was the dominant purpose of Congress to place the peculiar burden of this tax upon the income of trades and businesses exceeding what was deemed a normally reasonable return upon the capital actually embarked. But if such capital were to be computed according to appreciated market values based upon the estimates of interested parties (on whose returns perforce the Government must in great part rely), exaggerations would be at a premium, corrections difficult, and the tax easily evaded. Section 207 shows that Congress was fully alive to this and designedly adopted a term—"invested capital"—and a definition of it, that would

measurably guard against inflated valuations. The word "invested" in itself imports a restrictive qualification. When speaking of the capital of a business corporation or partnership, such as the act deals with, "to invest" imports a laying out of money, or money's worth, either by an individual in acquiring an interest in the concern with a view to obtaining income or profit from the conduct of its business, or by the concern itself in acquiring something of permanent use in the business; in either case involving a conversion of wealth from one form into another suitable for employment in the making of the hoped-for gains. See Webster's New Internat. Dict., "invest," 8; Century Dict., "invest," 7; Standard Dict., "invest," 1.

In order to adhere to this restricted meaning and avoid exaggerated valuations, the draftsman of the act resorted to the test of including nothing but money, or money's worth, actually contributed or converted in exchange for shares of the capital stock, or actually acquired through the business activities of the corporation or partnership (involving again a conversion) and coming in *ab extra*, by way of increase over the original capital stock. How consistently this was carried out becomes evident as the section is examined in detail. Cash paid in, and tangible property paid in other than cash, are confined to such as were contributed for stock or shares in the corporation or partnership; and the property is to be taken at its actual cash value "at the time of such payment"—distinctly negativing any allowance for appreciation in value. There is but a single exception: tangible property paid in prior to January 1, 1914, may be taken at its actual cash value on that date, but in no case exceeding the par value of the original stock or shares specifically issued for it; a restriction in itself requiring the valuation to be taken as of a date prior to the war period, and in no case to exceed the stock valuation placed upon it at the

time it was contributed. The provision of clause (3) that includes "paid in or earned surplus and undivided profits used or employed in the business" recognizes that in some cases contributions are received from stockholders in money or its equivalent for the specific purpose of creating an actual excess capital over and above the par value of the stock; and, in view of the context, surplus "earned" as well as that "paid in" excludes the idea of capitalizing (for the purposes of this tax) a mere appreciation of values over cost.

The same controlling thought is carried into the proviso, which relates to the valuation of patents, copyrights, trade-marks, good will, franchises, and similar intangible property. Every line shows evidence of a legislative purpose to confine the account to such items as were paid in for stock or shares, and to their values "at the time of such payment"; but, with regard to those *bona fide* purchased prior to March 3, 1917, there is a special provision, limiting the effect of any adjustments that might have been made in view of the provisions of the act of that date.

It is clear that clauses (1) and (2) refer to actual contributions of cash or of tangible property at its cash value contributed in exchange for stock or shares specifically issued for it; and that neither these clauses, nor clause (3) which relates to surplus, can be construed as including within the definition of invested capital any marking up of the valuation of assets upon the books to correspond with increase in market value, or any paper transaction by which new shares are issued in exchange for old ones in the same corporation, but which is not in substance and effect a new acquisition of capital property by the company.

It is clear enough that Congress adopted the basis of "invested capital" measured according to actual contributions made for stock or shares and actual accessions

in the way of surplus, valuing them according to actual and *bona fide* transactions and by valuations obtaining at the time of acquisition, not only in order to confine the capital, the income from which was to be in part exempted from the burden of this special tax, to something approximately representative of the risks accepted by the investors in embarking their means in the enterprise, but also in order to adopt tests that would enable returns to be more easily checked by examination of records, and make them less liable to inflation than if a more liberal meaning of "capital and surplus" had been adopted; thus avoiding the necessity of employing a special corps of valuation experts to grapple with the many difficult problems that would have ensued had general market values been adopted as the criteria.

In view of the special language employed in § 207, obviously for the purpose of avoiding appreciated valuations of assets over and above cost, the argument that such value is as real as cost value, and that in the terminology of corporation and partnership accounting "capital and surplus" means merely the excess of all assets at actual values over outstanding liabilities, and "surplus" means the intrinsic value of all assets over and above outstanding liabilities plus par of the stock, is beside the mark. Nor has the distinction between capital and income, discussed in *Doyle* v. *Mitchell Bros. Co.*, 247 U. S. 179, 187; *Hays* v. *Gauley Mountain Coal Co.*, 247 U. S. 189, 193; and *Southern Pacific Co.* v. *Lowe*, 247 U. S. 330, 334–335, any proper bearing upon the questions here presented.

Upon the strength of an administrative interpretation contained in a Treasury Regulation pertaining to the Revenue Act of 1917, under which "stocks" were to be regarded as tangible property when paid in for stock or shares of a corporation, it is insisted that appellant's stock dividend distribution of 1912 ought to be treated

as paid for in tangible property, the old stock surrendered being regarded as tangible for the purpose. But that distribution, in substance and effect, was an internal transaction, in which the company received nothing from the stockholders any more than they received anything from it (see *Eisner* v. *Macomber*, 252 U. S. 189, 210–211); and the old shares cannot be regarded as having been "paid in for" the new ones within the meaning of § 207 (a) (2), even were they "stocks" within the meaning of that Regulation, which is doubtful.

It is said that the admitted increase in the value of appellant's ore lands is properly to be characterized as earned surplus, because it was the result of extensive exploration and development work. We assume that a proper sum, not exceeding the cost of the work, might have been added to earned surplus on that account; but none such was stated in appellant's petition, nor, so far as appears, in its return of income. In the absence of such a showing it was not improper to attribute the entire $9,915,400, added to the book value of the ore property in the year 1912, to a mere appreciation in the value of the property; in short, to what is commonly known as the "unearned increment," not properly "earned surplus" within the meaning of the statute.

The foregoing considerations dispose of the contention that either the increased value of appellant's ore lands, or the surrender of the old stock in exchange for the new issues based upon that value, can be regarded as "tangible property paid in other than cash, for stock or shares in such corporation" within the meaning of § 207 (a) (2); and of the further contention that such increased value can properly be regarded as "paid in or earned surplus and undivided profits" under § 207 (a) (3).

It is urged that this construction, defining invested capital according to the original cost of the property instead of its present value, has the effect of rendering the

act "glaringly unequal" and of doubtful constitutionality; the insistence being that, so construed, it operates to produce baseless and arbitrary discriminations, to the extent of rendering the tax invalid under the due process of law clause of the Fifth Amendment. Reference is made to cases decided under the equal protection clause of the Fourteenth Amendment (*Southern Ry. Co.* v. *Greene*, 216 U. S. 400, 418; *Gast Realty Co.* v. *Schneider Granite Co.*, 240 U. S. 55); but clearly they are not in point. The Fifth Amendment has no equal protection clause; and the only rule of uniformity prescribed with respect to duties, imposts, and excises laid by Congress is the territorial uniformity required by Art. I, § 8. *Pollock* v. *Farmers' Loan & Trust Co.*, 157 U. S. 429, 557; *Knowlton* v. *Moore*, 178 U. S. 41, 98, 106; *Flint* v. *Stone Tracy Co.*, 220 U. S. 107, 150; *Billings* v. *United States*, 232 U. S. 261, 282; *Brushaber* v. *Union Pacific R. R. Co.*, 240 U. S. 1, 24. That the statute under consideration operates with territorial uniformity is obvious and not questioned.

Appellant cites *Looney* v. *Crane Co.*, 245 U. S. 178, 188, and *International Paper Co.* v. *Massachusetts*, 246 U. S. 135, 145, but these cases also are inapplicable, being based upon the due process clause of the Fourteenth Amendment, with which state taxing laws were held in conflict because they had the effect of imposing taxes on the property of foreign corporations located and used beyond the jurisdiction of the taxing State. There is no such infirmity here.

Nor can we regard the act—in basing "invested capital" upon actual costs to the exclusion of higher estimated values—as productive of arbitrary discriminations raising a doubt about its constitutionality under the due process clause of the Fifth Amendment. The difficulty of adjusting any system of taxation so as to render it precisely equal in its bearing is proverbial, and such nicety is not even required of the States under the equal protection

clause, much less of Congress under the more general requirement of due process of law in taxation. Of course it will be understood that Congress has very ample authority to adjust its income taxes according to its discretion, within the bounds of geographical uniformity. Courts have no authority to pass upon the propriety of its measures; and we deal with the present criticism only for the purpose of refuting the contention, strongly urged, that the tax is so wholly arbitrary as to amount to confiscation.

The act treats all corporations and partnerships alike, so far as they are similarly circumstanced. As to one and all, Congress adjusted this tax, generally speaking, on the basis of excluding from its operation income to the extent of a specified percentage (7 to 9 per cent.) of the capital employed, but upon condition that such capital be valued according to what actually was embarked at the outset or added thereafter, disregarding any appreciation in values. If in its application the tax in particular instances may seem to bear upon one corporation more than upon another, this is due to differences in their circumstances, not to any uncertainty or want of generality in the tests applied.

Minor distinctions—such as those turning upon the particular dates of January 1, 1914, and March 3, 1917—are easily explained, as we have seen. The principal line of demarcation—that based upon actual costs, excluding estimated appreciation—finds reasonable support upon grounds of both theory and practice, in addition to the important consideration of convenience in administration, already adverted to. There is a logical incongruity in entering upon the books of a corporation as the capital value of property acquired for permanent employment in its business and still retained for that purpose, a sum corresponding not to its cost but to what probably might be realized by sale in the market. It is not merely that

the market value has not been realized or tested by sale made, but that sale cannot be made without abandoning the very purpose for which the property is held, involving a withdrawal from business so far as that particular property is concerned. Whether in a given case property should be carried in the capital account at market value rather than at cost may be a matter of judgment, depending upon special circumstances and the local law. But certainly Congress, in seeking a general rule, reasonably might adopt the cost basis, resting upon experience rather than anticipation.

In organizing corporations, it is not unusual to issue different classes of securities, with various priorities as between themselves, to represent different kinds of contribution to capital. In exchange for cash, bonds may be issued; for fixed properties, like plant and equipment, preferred stock may be given; while more speculative values, like good-will or patent rights, may be represented by common stock. In the present case, for instance, when appellant took the estimated increase in value of its ore lands as a basis for increased capitalization, it issued preferred stock to the amount of the former total, carrying those lands at cost, and issued a like amount of common stock to represent the appreciation in their market value. It does not appear that in form the new issues were thus allocated; but at least there was a recognition of a higher claim in favor of one part of the book capital than of the other. Upon like grounds, it was not unreasonable for Congress, in adjusting the "excess profits tax," to accord preferential treatment to capital representing actual investments, as compared with capital representing higher valuations based upon estimates, however confident and reliable, of what probably could be realized were the property sold instead of retained.

From every point of view, the tax in question must be sustained. We intimate no opinion upon the effect of

the act with respect to deductions from cost values of capital assets because of depreciation or the like; no question of that kind being here involved.

Judgment affirmed.

MR. JUSTICE MCREYNOLDS concurs in the result.

FREDERICK, TRUSTEE IN BANKRUPTCY OF SCHMIDT, v. FIDELITY MUTUAL LIFE INSURANCE COMPANY OF PHILADELPHIA.

CERTIORARI TO THE SUPERIOR COURT OF THE STATE OF PENNSYLVANIA.

No. 547. Submitted January 3, 1921.—Decided May 16, 1921.

An insurance company which paid to the beneficiary the amount of a life insurance policy, in strict conformity with its terms, after the death of the insured and without notice of his pending bankruptcy or claim made by the bankruptcy trustee, is not liable to pay the trustee the surrender value under § 70a of the Bankruptcy Act. P. 397.

75 Pa. Sup. Ct. Rep. 77, affirmed.

THE case is stated in the opinion.

Mr. Lowrie C. Barton for petitioner.

Mr. George Sutherland for respondent. *Mr. John C. Slack*, *Mr. O. S. Richardson* and *Mr. W. D. N. Rogers* were also on the brief.

MR. JUSTICE PITNEY delivered the opinion of the court.

John E. Schmidt having died pending bankruptcy, his trustee, the present petitioner, sued the Insurance Com-

pany, respondent, in the Court of Common Pleas of Allegheny County, Pennsylvania, to recover the proceeds of a certain policy of life insurance, with interest from the date of death. By an amended statement plaintiff limited his claim to the surrender value of the policy at the time of the adjudication of bankruptcy. The Court of Common Pleas gave judgment in favor of defendant; on appeal the Superior Court affirmed the judgment (75 Pa. Sup. Ct. Rep. 77); the Supreme Court of the State refused an appeal, thereby making the judgment of the Superior Court final; and a writ of certiorari brings the case here.

The facts in brief are as follows: September 20, 1902, the insurance company issued a policy of insurance upon the life of John E. Schmidt in the sum of $1,000, payable upon surrender of the policy properly receipted, after acceptance of proof of death; payment to be made to his wife, Annie M. Schmidt, or, if he should survive her, then to his administrators, executors or assigns, subject to certain provisions, one of which was: "The insured, with the written approval of the President or Vice-President, may upon the surrender of this policy, change the beneficiary, or with such approval it may be assigned." December 19, 1912, a petition in involuntary bankruptcy was filed against Schmidt; on January 8th following he was duly adjudged a bankrupt; and one month later petitioner was elected and duly qualified as his trustee. The policy was not included in the schedule of assets, and petitioner had no knowledge of it until after the proceeds had been paid by the insurance company to the widow. Upon the date of the adjudication of bankruptcy the policy had a cash surrender value of $322. April 4, 1913, the bankrupt died, proof of the fact and cause of his death was duly made and accepted by the company, and May 7, 1913, it paid the face of the policy to the beneficiary named therein and took her receipt therefor. Neither

then nor at any time before had the company knowledge of the adjudication in bankruptcy, or notice that the trustee would claim the whole or any part of the policy.

The trustee's suit to recover the surrender value is grounded upon § 70a of the Bankruptcy Act (July 1, 1898, c. 541, 30 Stat. 544, 565), under which the trustee is vested by operation of law with the title of the bankrupt as of the date he was adjudged a bankrupt, to rights and property not exempt, including "(3) powers which he might have exercised for his own benefit, but not those which he might have exercised for some other person; . . . (5) property which prior to the filing of the petition he could by any means have transferred or which might have been levied upon and sold under judicial process against him: *Provided*, That when any bankrupt shall have any insurance policy which has a cash surrender value payable to himself, his estate, or personal representatives, he may, within thirty days after the cash surrender value has been ascertained and stated to the trustee by the company issuing the same, pay or secure to the trustee the sum so ascertained and stated, and continue to hold, own, and carry such policy free from the claims of the creditors participating in the distribution of his estate under the bankruptcy proceedings, otherwise the policy shall pass to the trustee as assets; . . ."

This provision shows it was the purpose of Congress to pass to the trustee whatever sum was available to the bankrupt at the time of bankruptcy as cash assets to be realized on surrender of the policy, but otherwise to leave to the insured the benefit of his life insurance. *Burlingham* v. *Crouse*, 228 U. S. 459, 473; *Everett* v. *Judson*, 228 U. S. 474. In two recent cases, *Cohen* v. *Samuels*, 245 U. S. 50, 53; *Cohn* v. *Malone*, 248 U. S. 450, we have held that the surrender value of a policy not in terms payable to the bankrupt but which could be made so payable at the bankrupt's will by a simple declaration changing the

beneficiary, must be regarded as assets to which the trustee in bankruptcy was entitled. In each case the question arose while the policy was in the bankrupt's possession unmatured, and the interest of the insurance company was not affected. Here the question is whether, after the death of the insured and payment of the stipulated amount to the beneficiary named in the policy in strict conformity to its terms, without notice of the bankruptcy or claim made by the trustee, there is a liability on the part of the insurance company to pay to the trustee the surrender value that, on complying with the terms of the policy, he might have demanded.

It is not enough to sustain the trustee's claim to say that the filing of the petition in bankruptcy was a caveat to all the world, and in effect an attachment and injunction, and that on adjudication title to the bankrupt's property became vested in the trustee. *Mueller* v. *Nugent*, 184 U. S. 1, 14. The asserted right of property arose out of a contract under which the insurance company had rights as well as the insured. The company's contract was to pay the stipulated amount to the beneficiary first named on receiving proof of death of the insured, unless the latter should have surrendered the policy and, with the written approval of the head officer of the company, have changed the beneficiary. The requirement of such surrender and approval was for the protection of the company, so purposed that at least it should have notice before its liability under the policy was modified. Section 70a of the Bankruptcy Act cannot be construed to give to the trustee in bankruptcy a right as against the company to demand that the surrender value be made assets of the estate, as by a change in beneficiary, without timely notice to the company of a demand for such a change; for the section in its very words contemplates that the cash surrender value shall have been "ascertained and stated to the trustee by the company issuing the" policy.

In the present case, the company, having in good faith performed the contract according to its terms, without the notice that the contract called for as a condition of changing the terms, can not be called upon to make the further payment demanded by the trustee. *Frederick* v. *Metropolitan Life Ins. Co.*, 239 Fed. Rep. 125.

Judgment affirmed.

YEE WON v. WHITE, AS COMMISSIONER OF IMMIGRATION, PORT OF SAN FRANCISCO.

CERTIORARI TO THE CIRCUIT COURT OF APPEALS FOR THE NINTH CIRCUIT.

No. 209. Submitted April 20, 1921.—Decided May 16, 1921.

A Chinese person who lawfully entered the United States as the minor son of a Chinese merchant, but whose status here became that of a laborer, *held* not entitled to bring in his wife and minor children, married and born during his temporary absence in China. P. 400.

258 Fed. Rep. 792, affirmed.

THE case is stated in the opinion.

Mr. M. Walton Hendry and *Mr. John L. McNab* for petitioner. *Mr. Joseph P. Fallon* was also on the brief.

The Solicitor General for respondent.

MR. JUSTICE MCREYNOLDS delivered the opinion of the court.

The courts below denied petitioner's application for a writ of *habeas corpus* to secure release of his wife and minor children, who having been denied admission upon their

arrival at San Francisco from China, were being held for return. 258 Fed. Rep. 792. He must be regarded here as a Chinese person first permitted to enter the United States in 1901 as a resident merchant's minor son, but who subsequently acquired the status of laborer and as such entitled to remain.

In respect to the parties specially concerned the Circuit Court of Appeals said: "The father of Yee Won died in San Francisco in 1908. In the latter part of 1910 Yee Won applied to the immigration officers at the port of San Francisco for an identification of his status. He was about to depart for China, and it was his purpose to secure such an identification as would secure his admission upon his return. He made no claim that he was a merchant. His claim was that he was 'a capitalist and property owner.' He was granted such a certificate and departed for China in January, 1911. He returned on May 29, 1914. He was then 33 years of age. He claims to have married Chin Shee in China, March 2, 1911, and that a daughter, Yee Tuk Oy, was born to them November 28, 1912, and a son, Yee Yuk Hing, was born to them on November 2, 1913. These three are the present applicants to enter the United States. They were all born in China, and this is their first application to enter the United States."

The writ was properly denied unless as matter of law such a laborer may properly demand that his wife and minor children be permitted to come into this country and reside with him notwithstanding they were born in China and have never resided elsewhere. In support of such right *United States* v. *Mrs. Gue Lim*, 176 U. S. 459, is cited, and it is said that the reasoning therein which permitted her to enter because a merchant's wife applies to the family of a Chinese laborer, who lawfully resides here. But that case turned upon the true meaning of § 6, Act of July 5, 1884, c. 220, 23 Stat. 115, which required

every Chinese person other than laborers as condition of admission to present a specified certificate. The conclusion was that the section should not be construed to exclude their wives, since this would obstruct the plain purpose of the Treaty of 1880 to permit merchants freely to come and go.

The Treaty of 1894, 28 Stat. 1210, provided that "the coming, except under the conditions hereinafter specified, of Chinese laborers to the United States shall be absolutely prohibited," but this "shall not apply to the return to the United States of any registered Chinese laborer who has a lawful wife, child, or parent in the United States, or property therein of the value of one thousand dollars, or debts of like amount due him and pending settlement." Exclusion of all Chinese laborers, with certain definite, carefully guarded exceptions, was the manifest end in view, and for a long time the same design has characterized legislation by Congress. "In the opinion of the Government of the United States the coming of Chinese laborers to this country endangers the good order of certain localities within the territory thereof." See Act of May 6, 1882, c. 126, 22 Stat. 58; Act of July 5, 1884, c. 220, 23 Stat. 115; Act of September 13, 1888, c. 1015, 25 Stat. 476, 477; Act of May 5, 1892, c. 60, 27 Stat. 25; Act of November 3, 1893, c. 14, 28 Stat. 7.

The special object of the Treaty of 1894 was to secure assent of China to the limitation or suspension by the United States of immigration or residence of Chinese laborers. Prior to that time rather drastic legislation had undertaken to limit such immigration and residence. These statutes were "reënacted, extended, and continued, without modification, limitation, or condition" by Act of April 29, 1902, c. 641, 32 Stat. 176, as amended by Act of April 27, 1904, c. 1630, § 5, 33 Stat. 428, and are now in force notwithstanding the Treaty of 1894 expired in 1904. *Hong Wing* v. *United States*, 142 Fed. Rep. 128. This

well defined purpose of Congress would be impeded rather than facilitated by permitting entry of the wives and minor children of Chinamen who first came after the ratification of the treaty, as members of an exempt class, and later assumed the status of laborers. We think our statutes exclude all Chinese persons belonging to the class defined as laborers except those specifically and definitely exempted, and there is no such exemption of a resident laborer's wife and minor children.

The judgment of the court below is

Affirmed.

MR. JUSTICE CLARKE dissents.

UNITED STATES *v.* ÆTNA EXPLOSIVES COMPANY.

CERTIORARI TO THE UNITED STATES COURT OF CUSTOMS APPEALS.

No. 296. Argued April 27, 28, 1921.—Decided May 16, 1921.

The addition of 20 per cent of sulphuric acid to a shipment of nitric acid, to render the latter non-injurious to the steel tanks in which it is transported, resulting in a mechanical mixture not intended or adapted as such to commercial use, does not take the merchandise out of par. 387 of the free list, Tariff Act of 1913, and render it dutiable under par. 5, which imposes 15 per cent ad valorem on "all chemical and medicinal compounds, preparations, mixtures," etc. P. 404.

9 Gust. App. Rep. 298, affirmed.

CERTIORARI to review a judgment of the Court of Customs Appeals, which, reversing a judgment order of the Board of General Appraisers (G. A. 8235, 36 T. D. 170; Brown, G. A., dissenting), sustained the respondent's claim of free entry for its merchandise.

Mr. Assistant Attorney General Hanson for the United States.

Mr. Addison S. Pratt for respondent.

MR. JUSTICE MCREYNOLDS delivered the opinion of the court.

A writ of certiorari to the Court of Customs Appeals was granted under the Act of August 22, 1914, c. 267, 38 Stat. 703. 9 Cust. App. Rep. 298.

The question presented is whether the imports came within paragraph 387 of the free list, Tariff Act of 1913, c. 16, 38 Stat. 114, which provides—

"Acids: Acetic or pyroligneous, arsenic or arsenious, carbolic, chromic, fluoric, hydrofluoric, hydrochloric or muriatic, nitric, phosphoric, phthalic, prussic, silicic, sulphuric or oil of vitriol, and valerianic;" or was dutiable under paragraph 5—

"Alkalies, alkaloids, and all chemical and medicinal compounds, preparations, mixtures and salts, and combinations thereof not specially provided for in this section, 15 per centum ad valorem."

The imported merchandise was nitric acid, to which approximately 20 per cent. by weight and 5 per cent. according to value of sulphuric acid had been added for the sole purpose of preventing corrosion of steel tank cars essential for transportation of the former acid in large quantities. That the addition of sulphuric acid prevents nitric acid from attacking steel is a well known fact concerning which there is no very satisfactory explanation. The court below found the sulphuric acid was added solely for transportation purposes, and that the result was not a mixture merchantable as such for use in the United States. It accordingly held that no duty should have been demanded and among other things said:

"The word 'preparations' [in paragraph 5] implies of course that they are something prepared and adapted to particular uses or services. It is no stretch to say that the word 'mixtures' as here employed was used in a similar sense to import mixtures susceptible of commercial use as they exist, or are at least such as are purposely started on their way toward adaptation to such use. While not resting this case solely upon this view, it certainly would appeal with great force were it the only consideration involved." "The testimony fairly tends to show that as a commercial proposition there is only one practical means of transporting strong nitric acid such as that involved in the present importation in quantities sufficient to meet the current demand, and that is to mix it with a sufficient amount of sulphuric acid and ship it in tank cars or drums." "It is evident that the importer sought to introduce nitric acid and had no desire to import sulphuric acid, or nitric and sulphuric acid as a usable mixture. This small percentage of sulphuric acid which was relatively insignificant in its money value was employed solely for the purpose of making it possible to ship the nitric acid into this country in usable quantities. The result was not a mixture merchantable as such for use in the United States. . . . The merchandise had not reached the state of a commercial mixture contemplated by the statute. It was susceptible of no use other than as nitric acid, which must before use be again treated. The mixing of this minimum amount of sulphuric acid should be treated as a means of and part of the shipment, and as an act as essential in the importation of nitric acid as would have been the proper packing of glassware or other goods designed for shipment by rail." "In the present case we are convinced that there was neither an advantage to the importer in adding the requisite amount of sulphuric acid to admit of safe shipment of the nitric acid nor was there any possible loss of revenue to the

Government. The sole purpose which this addition was made was to admit of shipmen It would be sticking in the bark to say that this was such a mixture as the statute in question contemplates. It is not yet prepared. It has not been advanced as a preparation for actual use except to the extent that a small portion of the requisite amount of sulphuric acid which when added in the proper quantity would result in making a mixture which was usable, is found in this tank instead of some other. The quantity is relatively insignificant." "We think that the true rule is that the introduction of a quantity of sulphuric acid solely for the purpose of rendering the transportation of nitric acid safe, and which does not result in a usable mixture, is more in the nature of an act of shipment than an admixture and does not produce a substance which is dutiable under paragraph 5."

We find no reason for disapproving the conclusion reached by the Court of Customs Appeals. The applicable tariff act granted free entry to both nitric and sulphuric acids, and, viewed practically, the commodity in question was nothing more than nitric acid rendered non-injurious to steel tanks by adding sulphuric acid of small value. The two acids do not interact and the result was a mere mechanical mixture not intended or adapted as such for commercial use and not a chemical mixture within the true intent of paragraph 5.

The judgment of the court below must be

Affirmed.

MR. JUSTICE DAY took no part in the consideration or decision of this case.

MR. JUSTICE CLARKE dissents.

NEW YORK CENTRAL & HUDSON RIVER RAILROAD COMPANY *v.* YORK & WHITNEY COMPANY.

YORK & WHITNEY COMPANY *v.* NEW YORK CENTRAL & HUDSON RIVER RAILROAD COMPANY.

ERROR AND CERTIORARI TO THE SUPERIOR COURT OF THE STATE OF MASSACHUSETTS.

Nos. 280, 281. Argued April 22, 1921.—Decided May 16, 1921.

Interstate shipments of perishable freight were consigned, subject to lawful charges, to a commission merchant, which paid the charges demanded by the terminal carrier, accepted the freight, sold it and remitted the net proceeds to the consignors, without having possession of the bills of lading or knowledge of their terms and conditions. By mistake of the carrier, the charges collected were less than the lawful rates established under the Interstate Commerce Act. *Held*, that the commission merchant was liable for the balance, irrespective of contract and as a matter of law. P. 408. *Pittsburgh, Cincinnati, Chicago & St. Louis Ry. Co.* v. *Fink*, 250 U. S. 577.

230 Massachusetts, 206, reversed in part and affirmed in part.

THE case is stated in the opinion.

Mr. William L. Parsons for New York Central & Hudson River Railroad Co.

Mr. Amos L. Taylor for York & Whitney Co.

MR. JUSTICE MCREYNOLDS delivered the opinion of the court.

Neither party was wholly successful in the courts below. 230 Massachusetts, 206, (May 24, 1918). Each has

asked and obtained a writ of error and also a writ of certiorari. The latter properly bring the issues before us, and the former must be dismissed.

The Railroad Company as terminal carrier sued York & Whitney Company, a commission merchant, to recover the balance claimed for freight and refrigeration on nine carloads of melons, vegetables and fruit consigned to the latter, subject to lawful charges, and delivered at Boston during the years 1911 and 1912. They were shipped in interstate commerce upon straight bills of lading approved as to form by the Interstate Commerce Commission, but none of these came into the consignee's possession and it had no knowledge of their issuance or terms.

When York & Whitney Company accepted the cars it paid all charges claimed. The merchandise was sold at once and the net proceeds remitted to the shippers. Later, the Railroad Company discovered that it had collected less than lawful rates established under the Interstate Commerce Act, and thereupon demanded the balance alleged to be due by reason of such undercharges. Maintaining it had accepted the shipments upon the understanding that the charges were as reported, and had not agreed to pay more, York & Whitney Company refused the demand.

Commission merchants often receive from strangers shipments of perishable articles for sale at market prices. Under a trade custom such things are promptly disposed of and the net proceeds remitted to the consignors. Successful conduct of the business requires prompt settlements. The court below held that whether York & Whitney Company impliedly agreed to pay the rates imposed by law was a question of fact to be determined upon consideration of all the circumstances. It accordingly approved a judgment, entered upon a verdict, favorable to that company as to charges upon one car-

load (No. 280), and in behalf of the Railroad for those claimed on account of eight carloads (No. 281).

We think the doctrine announced in *Pittsburgh, Cincinnati, Chicago & St. Louis Ry. Co.* v. *Fink*, 250 U. S. 577, (November 10, 1919), is controlling, and that the liability of York & Whitney Company was a question of law. The transaction between the parties amounted to an assumption by the consignee to pay the only lawful rate it had the right to pay or the carrier the right to charge. The consignee could not escape the liability imposed by law through any contract with the carrier.

The judgment of the court below so far as challenged in No. 280 must be *reversed* and the cause remanded for further proceedings not inconsistent with this opinion.

The judgment so far as challenged in No. 281 is

Affirmed.

VICKSBURG, SHREVEPORT & PACIFIC RAILWAY COMPANY ET AL. *v.* ANDERSON-TULLY COMPANY.

ERROR TO THE CIRCUIT COURT OF APPEALS FOR THE FIFTH CIRCUIT.

No. 270. Argued March 24, 1921.—Decided May 16, 1921.

1. The provision of the amended Interstate Commerce Act allowing an action to enforce a reparation order to be brought in any district "through which the road of the carrier runs" (§ 16, c. 309, 36 Stat. 539, 554), applies to a district where the defendant owns no railroad but has its cars hauled by, and over the line of, another carrier for a mileage compensation to and from a point therein where both share the expenses of freight and ticket offices at which the defendant issues tickets and bills of lading to the points on its system outside pursuant to tariffs making no divisions of rates between the two. P. 411.

2. This provision as to venue was not repealed by the legislation abolishing the Commerce Court, 38 Stat. 219. P. 413.
3. Under the Federal Railroad Control Act, § 10, c. 25, 40 Stat. 456, an action to enforce a reparation order based on a shipment which moved before the Government took control of the defendant carrier's railroad, could be brought against the carrier while such control existed. P. 412.
4. A return showing service of summons in such an action on a person described as the carrier's freight agent is not impeached by the fact that the Government was in control of the railroad at the time, in the absence of proof that he was employed by the Director General of Railroads, and not also as agent of the carrier. P. 412.
5. A general finding by the District Court in an action at law tried without a jury is conclusive upon all matters of fact, and in the absence of exceptions to rulings of law during the trial, review in this court is limited to the sufficiency of the complaint. P. 414.
6. A petition, in an action to enforce a reparation order, *held* sufficient under § 16 of the amended Interstate Commerce Act, *supra*, prescribing that such a petition shall set forth briefly the causes for which damages are claimed and the order of the Commission in the premises. P. 415.
7. The pendency of a carrier's application for relief under § 4 of the Interstate Commerce Act as amended in 1910, did not suspend the Commission's power to award reparation for past exactions of an unreasonable rate which the carrier itself corrected by amending its tariffs after the petition for reparation was filed. P. 416.

261 Fed. Rep. 741, affirmed.

ERROR to review a judgment of the Circuit Court of Appeals affirming a judgment for the shipper in an action brought in the District Court to enforce a reparation order made by the Interstate Commerce Commission. The facts are stated in the opinion.

Mr. Samuel W. Moore, with whom *Mr. J. Blanc Monroe* and *Mr. Frank H. Moore* were on the brief, for plaintiffs in error.

Mr. Harry B. Anderson for defendant in error.

MR. JUSTICE CLARKE delivered the opinion of the court.

This is an action instituted by a shipper under the provisions of § 16 of the Interstate Commerce Act, as amended June 18, 1910, c. 309, 36 Stat. 539, 554, against various carriers, based upon an order of the Interstate Commerce Commission for the payment of money found due as reparation for the exacting of an unreasonable rate for the transportation of "box shooks" in carload lots from Vicksburg, Mississippi, to Port Arthur, Texas, which the carriers refused to pay.

It will be necessary to consider only the liability of the defendant, the Vicksburg, Shreveport & Pacific Railway Company, hereinafter referred to as the Vicksburg Company.

The petition in the case was filed in the United States District Court for the Western Division of the Southern District of Mississippi, and the plaintiff therein, defendant in error, for the purpose of showing the venue, allowed in § 16 of the Interstate Commerce Act, *supra*, alleged that the defendant, the Vicksburg Company, was operating a part of its road within that district. The Vicksburg Company challenged the jurisdiction of the District Court by a plea in abatement, denying that it owned or operated a railroad in the District at the time or for many months before the petition was filed and averred that the person on whom summons was served was not at the time its agent.

The shipper prevailed in both lower courts.

The venue provision of the Interstate Commerce Act allows such an action as we have here to be commenced in any district "through which the road of the carrier runs," and it is contended, first, that the Vicksburg Company did not have a road running through the District of suit, and that, therefore, the court did not have jurisdiction over the case.

It is stipulated that the Vicksburg Company is a Louisiana corporation and that at the times involved it owned a railroad extending through Louisiana to Delta Point, a station on the west bank of the Mississippi River, opposite Vicksburg. Its cars were ferried to and fro across the river and were hauled by the Alabama & Vicksburg Railroad Company, hereinafter called the Alabama Company, over its rails to freight and passenger stations in Vicksburg. The Vicksburg and the Alabama companies shared the expense of freight and ticket offices in Vicksburg, at which tickets were sold and bills of lading issued by the Vicksburg Company from Vicksburg to various points on its line. The Vicksburg Company filed passenger and freight tariffs with the Interstate Commerce Commission without any division of rates with the Alabama Company, that company being paid on a mileage basis for the service which it rendered east of the river. It is also stipulated "that exactly the same arrangement is now in force between" the Vicksburg and Alabama companies "as was in effect before the United States Government took control of these two roads."

Thus the mileage, passenger, freight and tariff publication, arrangements which the Vicksburg Company had with the Alabama Company plainly were equivalent in practice to a lease of the road of that company to the Vicksburg Company for its transportation purposes, and the dealings of the Vicksburg Company with the public and with the Interstate Commerce Commission with respect to traffic to and from Vicksburg were precisely the same as if it had owned or had leased the Alabama Company's tracks. The applicable venue provision of the Interstate Commerce Act does not require that the carrier shall be the owner of a railroad in the District, but only that its road must run through it, and we agree with the Circuit Court of Appeals in concluding that the tracks of the Alabama Company east of the river, in the district

of suit, under the circumstances of operation as the parties stipulated them to be, constituted them the road of the Vicksburg Company within the meaning of the act.

It is next contended that the person on whom summons was served was not, at the time, an agent of the Vicksburg Company.

The return of the marshal is that he executed the writ "by handing a true copy of this summons and petition for judgment to Austin King, freight agent for the Vicksburg, Shreveport and Pacific Railway Company." The plea in abatement denied on "information, knowledge and belief" of counsel that King was at the time of service an agent of either of the defendants. No evidence whatever was introduced to sustain this plea and in support of it sole reliance is placed upon the stipulation that the Government was in control of the lines of the Vicksburg Company at the time the petition was filed.

The unreasonable rate for which the reparation order was made was exacted on shipments moving long prior to the taking over of the railroads by the Government in December, 1917, and there being no evidence that King was not the agent of the Vicksburg Company, the return of the marshal was properly accepted by both lower courts as conclusive. He may not have been in the employ of the Director General of Railroads at all and it was entirely possible for him to have been serving as agent for both the Director and the Company.

Since the shipment for which reparation was allowed moved prior to the taking over of the railroads by the United States Government, as against the objection of government control, we think the provision of § 10 of the Federal Railroad Control Act (40 Stat. 451, 456) is applicable and ample to support the jurisdiction, viz., that "actions at law or suits in equity may be brought by and against such carriers and judgments rendered as now provided by law; and in any action at law or suit in equity

against the carrier, no defense shall be made thereto upon the ground that the carrier is an instrumentality or agency of the Federal Government."

It is further claimed that the act of Congress abolishing the Commerce Court (38 Stat. 208, 219), repealed by implication the provisions of § 16, *supra*, permitting such reparation suits as we have here to be filed in the District Court for any district "through which the road of the carrier runs" and that for this reason the District Court was without jurisdiction.

The plaintiff was a Michigan corporation and if the provisions of § 16 referred to had been repealed at the time the case was commenced the venue was improperly laid and the court was without jurisdiction.

The argument is that the act of Congress abolishing the Commerce Court, in restoring to the District Courts the jurisdiction which had been vested exclusively in that court, provided that "The venue of any suit hereafter brought to enforce, suspend, or set aside . . . any order of the Interstate Commerce Commission shall be in the judicial district wherein is the residence of the party or any of the parties upon whose petition the order was made;" (38 Stat. 219) and that this provision for venue is so inconsistent with that of § 16, *supra*, allowing suit to be commenced, on an order for the payment of money, in any district through which the road of the carrier runs, that the latter must be regarded as repealed by implication.

This contention is much too artificial and unsubstantial for us to consider it in much detail. It is enough to say that the two principal amendments to the Interstate Commerce Act of 1887 show that it has been the plainly expressed policy of Congress to make the prosecution of suits upon reparation orders for the payment of money progressively easier and less expensive for the shipper by enlarging the venue provisions of them, doubtless because

many such claims are so small that if suit could be maintained by the owners only in distant jurisdictions a large part of them would be abandoned. Act, 1887, 24 Stat. 379, 384, § 16; Act, 1906, 34 Stat. 584, 590, § 16; Act, 1910, 36 Stat. 539, 554, § 16. The Commerce Court repealing act was a section of an appropriation act and dealt with venue only to the extent necessary to redistribute the jurisdiction of the court abolished and in terms it repealed only acts or parts of acts in so far "as they relate to the establishment of the Commerce Court" and again so far as "inconsistent with the foregoing provisions relating to the Commerce Court." 38 Stat. 219, 221. The venue provided for, and relied upon in this suit, was for suits in the Circuit (District) Court on an order for the payment of money, and of such suits the Commerce Court never had jurisdiction.

The contention that Congress intended by implication to repeal and cut down to such narrow limits the venue which has gradually been so liberally extended cannot be entertained. The terms of the repealing act do not justify it and we cannot doubt that if such purpose had been intended it would not have been left to inference and implication but would have been clearly expressed.

Coming to the essentials of the case. When the cause came on for trial on its merits, a jury being duly waived, it is recited in the entry of the judgment that it was stipulated, that either party might use in evidence any part of the record and evidence introduced in the hearings before the Interstate Commerce Commission, which resulted in the order relied upon, and that any of the printed reports and findings of the Commission might be used. It is also recited that the plaintiff introduced the report of the Interstate Commerce Commission and the order of the Commission directing the payment of the money sued for, and rested its case, and that "the defendants introduced no evidence." Thereupon the

court found that the report and order of the Commission constituted *prima facie* evidence of the facts therein stated and entered judgment in favor of the plaintiff for the amount of the order with interest and an attorney's fee.

There was no request made by the carriers for any ruling of law, and no exception whatever was taken during the trial. There being no special findings of fact by the court, its general finding has the effect of a verdict of a jury (Rev. Stats., § 649), is conclusive upon all matters of fact, and there not being any exceptions to rulings of law in the progress of the trial, the review in this court is limited to the sufficiency of the complaint (Rev. Stats., § 700); *Norris* v. *Jackson*, 9 Wall. 125; *St. Louis* v. *Western Union Telegraph Co.*, 166 U. S. 388; *Lehnen* v. *Dickson*, 148 U. S. 71.

The contention that the petition does not state a cause of action against the carriers first appears in the assignment of errors in the Circuit Court of Appeals, after an elaborate answer and adverse judgment in the District Court. However, the petition avers that the shipper filed its petition with the Interstate Commerce Commission, claiming that it had been charged an unreasonable rate, that upon hearing the Commission entered an order for the payment of money "as reparation on account of an unreasonable rate exacted for the transportation" of its freight, that the order required payment to be made by a date named, that the carriers had refused payment when demanded, and that the suit was instituted under the Act to Regulate Commerce of 1887, and amendments thereof. To this petition copies of the report and order of the Commission were attached. These allegations were amply sufficient to meet the requirements of the statute, that the petition in such a case shall set forth briefly the causes for which damages are claimed and the order of the Commission in the premises. (36 Stat. 539, 554, § 16.)

It is also contended that it was not competent for the Interstate Commerce Commission to enter the order which was made, for the reason that before the hearing by the Commission the carriers had filed an application for relief under § 4 of the Interstate Commerce Act, as amended in 1910, which had not been disposed of at the time the order was made, and that therefore the provision of that act that no rates or charges lawfully existing at the time of the passage of the amendment should be required to be changed until the determination of such application by the Commission, was applicable. To this it is sufficient to say that it appears from the Commission's first report that immediately after the filing of the complaint with the Commission the carriers amended their tariffs so as to correct the unreasonable rate which was complained of under § 3 of the act, and we quite agree with the Commission that whatever the application under § 4 may have been (there is no copy of it in the record), such amendment removed the occasion for further suspension of action by the Commission under the provision quoted. The Commission aptly says that the rate then on file conformed "to the requirements of the fourth section and defendants' application in so far as this adjustment is concerned has no further office to perform."

The final contention that the facts found by the Interstate Commerce Commission were so adopted by the District Court as to become special findings of fact by that court which may be reviewed by this court without exception being taken to any of them is too trivial to deserve discussion.

It results that the judgment of the Circuit Court of Appeals is

Affirmed.

EX PARTE IN THE MATTER OF MATTHEW ADDY STEAMSHIP & COMMERCE CORPORATION, PETITIONER.

PETITION FOR WRIT OF MANDAMUS.

No. 30, Original. Argued April 11, 1921.—Decided May 16, 1921.

An order of the District Court remanding a case to the state court can not be reviewed by this court by mandamus. P. 418. Jud. Code, § 28.

Rule discharged; petition dismissed.

THE case is stated in the opinion.

Mr. T. K. Schmuck, with whom *Mr. Nelson B. Cramer* was on the briefs, for petitioner.

Mr. Edward R. Baird, Jr., and *Mr. Gilbert R. Swink* for respondent.

MR. JUSTICE CLARKE delivered the opinion of the court.

The Coalmont Moshannon Coal Company, a Pennsylvania corporation, filed its petition in the Circuit Court of the City of Norfolk, Virginia, against the petitioner, Matthew Addy Steamship & Commerce Corporation, a Delaware company, for the recovery of damages for the alleged breach of a contract, and, under Virginia practice, garnisheed other defendants. In due time, and in proper form, the defendant, the petitioner herein, filed its petition for the removal of the case to the District Court of the United States for the Eastern District of Virginia. Thereafter the plaintiff in the state court filed a motion to remand the case, claiming that it was not removable for the reason that the plaintiff and the principal defendant

were non-residents of the Eastern District of Virginia. The District Court sustained this motion and ordered the case remanded to the state court.

The petition in this proceeding prays that a writ of mandamus shall be issued, directing the District Judge for the Eastern District of Virginia, to vacate the order remanding the case, to redocket it in the District Court, and that it thereupon be heard and determined according to law. A rule to show cause was issued and the judge has filed his return, in which he asserts that the petition should be dismissed, for the reason that mandamus is not an appropriate remedy, because not permitted by the provisions of § 28 of the Judicial Code, reading as follows:

"Sec. 28. . . . Whenever any cause shall be removed from any State court into any district court of the United States, and the district court shall decide that the cause was improperly removed, and order the same to be remanded to the State court from whence it came, such remand shall be immediately carried into execution, and no appeal or writ of error from the decision of the district court so remanding such cause shall be allowed."

This language of the Judicial Code first appeared in the Act of Congress of March 3, 1887, c. 373, 24 Stat. 552, as reënacted on August 13, 1888, c. 866, 25 Stat. 433, and it has continued unchanged except by the substitution of the District for the Circuit Court.

In 1890, in the case of *In re Pennsylvania Co.*, 137 U. S. 451, it was held that the power which this court had before the passage of the acts, *supra*, to afford a remedy by mandamus when a cause, removed from a state court was improperly remanded thereto, was taken away by these acts. Upon full consideration of the prior legislation, this court in the opinion in that case said of the language of the statute quoted, p. 454:

"In terms, it only abolishes appeals and writs of error, it is true, and does not mention writs of mandamus; and

it is unquestionably a general rule, that the abrogation of one remedy does not affect another. But in this case, we think it was the intention of Congress to make the judgment of the Circuit Court remanding a cause to the state court final and conclusive. The general object of the act is to contract the jurisdiction of the federal courts. The abrogation of the writ of error and appeal would have had little effect in putting an end to the question of removal, if the writ of mandamus could still have been sued out in this court. It is true that the general supervisory power of this court over inferior jurisdictions is of great moment in a public point of view, and should not, upon light grounds, be deemed to be taken away in any case. Still, although the writ of mandamus is not mentioned in the section, yet the use of the words 'such remand shall be immediately carried into execution,' in addition to the prohibition of appeal and writ of error, is strongly indicative of an intent to suppress further prolongation of the controversy by whatever process. We are, therefore, of opinion that the act has the effect of taking away the remedy by mandamus as well as that of appeal and writ of error."

In *Fisk* v. *Henarie*, 142 U. S. 459, 468, *In re Pennsylvania Co.*, *supra*, was cited as authority for the declaration that "review on writ of error or appeal, or by mandamus is taken away" by the statutes cited.

In *Missouri Pacific Ry. Co.* v. *Fitzgerald*, 160 U. S. 556, 581, this court said: "It was subsequently decided in the case of *In re Pennsylvania Co.*, 137 U. S. 451, 454, that the power to afford a remedy by mandamus when a cause, removed from a state court, is improperly remanded, was taken away by the Acts of March 3, 1887, and August 13, 1888."

In *Powers* v. *Chesapeake & Ohio Ry. Co.*, 169 U. S. 92, 98, it was said that an order remanding a case such as we have here "is not reviewable by this court."

In *McLaughlin Brothers* v. *Hallowell*, 228 U. S. 278, it is held that an order of the United States Circuit Court, remanding a case to a state court, is not reviewable here, directly or indirectly, citing *Missouri Pacific Ry. Co.* v. *Fitzgerald*, 160 U. S. 556.

It is obvious that this statute, and these decisions interpreting it, rule the case at bar and require that the petition for mandamus be dismissed.

It is not important to inquire to what extent, if at all, *Ex parte Wisner*, 203 U. S. 449, and *In re Moore*, 209 U. S. 490, departed from the statute and decisions cited, for the correct rule with respect to the function and use of the writ of mandamus has been so often announced in other later cases that it has become entirely settled. *Ex parte Harding*, 219 U. S. 363; *McLaughlin Brothers* v. *Hallowell*, 228 U. S. 278; *Ex parte Roe*, 234 U. S. 70; *Pacific Live Stock Co.* v. *Lewis*, 241 U. S. 440, 447; *Ex parte Park Square Automobile Station*, 244 U. S. 412; *Ex parte Park & Tilford*, 245 U. S. 82.

The conflict of opinion in the lower courts with respect to the right of removal from a state court of a case in which the opposing parties are citizens of different States and neither is a resident of the State in which the case is commenced, is much to be regretted, but § 28 of the Judicial Code is controlling, and Congress alone has power to afford relief.

Rule discharged.
Petition dismissed.

BETHLEHEM MOTORS CORPORATION ET AL. v. FLYNT, SHERIFF OF FORSYTH COUNTY, NORTH CAROLINA, ET AL.

ERROR TO THE SUPREME COURT OF THE STATE OF NORTH CAROLINA.

No. 254. Submitted March 22, 1921.—Decided June 1, 1921.

A North Carolina statute (Laws 1917, c. 231) provided that every manufacturer of automobiles engaged in the business of selling them in the State must pay a license tax of $500 before selling or offering for sale, and made like requirement of every person or corporation there engaged in selling automobiles of a manufacturer who had not paid such tax, but further provided that, if an officer or representative of such manufacturer should file a sworn statement showing that at least three-fourths of the entire assets of the manufacturer were invested in bonds of the State or its municipalities or in property therein situate and returned for taxation, the license tax should be reduced to $100. As applied to two corporations of other States which made automobiles outside of North Carolina and a third which distributed them there through local agencies to which the automobiles were consigned for sale,—

Held: (1) That, assuming the corporations were doing business in North Carolina and were subject to her jurisdiction, the statute worked a discrimination against them, contrary to the Fourteenth Amendment. P. 424.

(2) That, without such assumption, it discriminated against their products, in violation of the commerce clause. P. 426.

178 N. Car. 399, reversed.

ERROR to a judgment of the Supreme Court of North Carolina sustaining a state license tax in a suit to restrain its enforcement. The facts are stated in the opinion.

Mr. J. E. Alexander for plaintiffs in error.

Mr. James S. Manning, Attorney General of the State of North Carolina, for defendants in error. *Mr. Frank Nash* was also on the brief.

MR. JUSTICE MCKENNA delivered the opinion of the court.

The defendants in error are, respectively, Sheriffs of Forsyth and Guilford Counties, North Carolina. Under the laws of the State, for the non-payment of a license tax, the former levied on a motor truck belonging to the Bethlehem Corporation (referred to as the Pennsylvania Corporation); the latter levied on a car belonging to the National Motor Car and Vehicle Corporation (referred to as the Indiana Corporation). The trucks are manufactured in Pennsylvania, the cars in Indiana; and they are distributed in North Carolina and other States through W. Irving Young & Company, (referred to as the Delaware Corporation) a corporation of the State of Delaware, which conducts its business in North Carolina by the Liberty Motors Corporation and the National Motors Company, these companies being corporations of North Carolina. And it is the finding or conclusion of the trial court that "both corporations thereupon were and became the agents" of the three other corporations "for the purpose of selling and delivering said trucks and automobiles." They were consigned to the two latter companies and were sold direct by them from their storage warehouse, being consigned to them for that purpose and not to be used exclusively as samples or for demonstration purposes, nor used or intended to be used simply for the purpose of soliciting orders to be filled by shipment from the place of their manufacture.

Plaintiffs in error brought this suit in the Superior Court of Forsyth County to restrain the defendants in error from selling the truck and car. A preliminary restraining order was granted. It was subsequently dissolved. The order of dissolution was affirmed by the Supreme Court, thereby sustaining the license tax and the levy upon the automobiles made to enforce it.

A summary of the act by which a license is required is necessary. It provides in § 72 of c. 231, Laws of 1917, that every manufacturer of automobiles "engaged in the business of selling the same in this State, or every person or persons or corporation engaged in selling automobiles in this State, the manufacturer of which has not paid the license tax provided for in this section, before selling or offering for sale any such machine, shall pay to the State Treasurer a tax of five hundred dollars and obtain a license for conducting such business." The name of the machine must accompany the application for a license, which must be in writing. A licensee may employ an unlimited number of agents, but each county of the State may levy a tax on each agent. Besides some other provisions, there is one (and it is of special pertinence in the case) "that if any officer, agent, or representative of such manufacturer shall file with the State Treasurer a sworn statement showing that at least three-fourths of the entire assets of the said manufacturer of automobiles are invested" in the bonds of the State or any of its counties, cities or towns, or in property situated therein, and returned for taxation, the taxes named in the section shall be one-fifth of those named. Upon the renewal of a license that shall have been in force less than six months, a rebate of $250 is allowed on the new license.

Two contentions are made by the plaintiffs in error:

(1) That the act imposing the tax offends the equal protection of the laws clause of the Fourteenth Amendment of the Constitution of the United States.

(2) That the act attempts to regulate interstate commerce in contravention of the commerce clause of the Constitution.

The contentions depend upon different considerations. The basis of the first is that the corporations are discriminated against; the basis of the second is that their products are. The contentions, therefore, should not be

confused. They fall under two heads: (1) If the Pennsylvania Corporation and the Indiana Corporation and the Delaware Corporation are doing business in the State, and, therefore, within its jurisdiction, they undoubtedly can complain of a discrimination against them that is offensive to the Fourteenth Amendment. *Southern Ry. Co.* v. *Greene*, 216 U. S. 400, 415. (2) If, however, they are not in the State and subject to its jurisdiction and seek to enter, the tax may be considered a condition which the statute may impose, (*Paul* v. *Virginia*, 8 Wall. 168, and a number of subsequent cases, including *Southern Ry. Co.* v. *Greene*, *supra*), unless, as plaintiffs in error contend, the tax is a discrimination against their products.

These contentions we will consider in their order, keeping them as separate as possible.

(a) This court has decided too often to need citation of the cases that corporations doing business in a State and having an agent there are within the jurisdiction of the State for the purpose of suit against them, and we may assume that the principle is applicable here and that the Pennsylvania Corporation, the Indiana Corporation and the Delaware Corporation are within the jurisdiction of the State and subject to its laws, equally with the corporations of the State. It will be observed, however, that the act under review applies to all manufacturers and persons engaged in selling automobiles in the State. The act makes no distinctions between non-resident and resident manufacturers: Wherein, then, is there discrimination? It is contended to be in the provision which reduces the tax to one-fifth of its amount—from $500 to $100—if the manufacturer of the automobiles has three-fourths of his assets invested in the bonds of the State or some of its municipalities, or in other property situated therein and returned for taxation. The provision is declared to be impossible of performance and its effect to be that a manufacturer not having such investment of property is

charged $500 for a license and one having such investment of property is charged only $100. And plaintiffs in error, it is asserted, are necessarily in the $500 class. The contrasting assertion is that local manufacturers are in the $100 class, and that, therefore, there is illegal discrimination in their favor.

In explicit specification of such discrimination plaintiffs in error assert that the provision as applied to them is "contrary to all common sense," and that the Supreme Court conceded the improbability of compliance with it by the manufacturer of another State.

The Attorney General of the State seems to concur in the denunciation and adds to it the declaration that the insistence of the act is of an "utterly futile project" but adds, in order to remove or palliate its discrimination, it is as "futile" to manufacturers of the State as to manufacturers of other States, and considers it nugatory. His words are, "from nothing, nothing can arise," and that "discrimination cannot be predicated upon any scheme which is not workable." He therefore dismisses the provision as not applicable.

May we accept his view of it, that is, regard the condition as a mere *brutum fulmen*, imposing no condition or burden, against the decision of the Supreme Court of the State? The court has assumed its efficacy and regarded it as a legal condition upon the Pennsylvania Corporation, the Indiana Corporation, and the Delaware Corporation, doing business in the State. We are unable to concur in this conclusion. It is a perilous power to concede to the State, and it is immediately manifest that it can be exerted to prevent all commerce of those corporations (or other corporations) with the State except as the commerce might be through direct personal purchases and importations. In other words, the power can be exerted to exclude the products of those corporations, and every other corporation, if they have, or it has, agents in the State.

But if that provision can be dismissed as nugatory, as the Attorney General asserts, we encounter the alternative provision which requires the investment of a like proportion of assets of foreign manufacturers in property in the State returned for taxation. In resistance to the assertion that the provision discriminates against non-resident manufacturers, the Attorney General contends that it is as applicable to resident manufacturers as to non-resident manufacturers, and, of course, his inference is that its condition can be performed as easily by one as by the other, and discriminates against neither.

To this we cannot assent. The condition can be satisfied by a resident manufacturer, his factory and its products in the first instance being within the State; it cannot be satisfied by a non-resident manufacturer, his factory necessarily being in another State, some of its products only at a given time being within the State. Therefore, there is a real discrimination, and an offense against the Fourteenth Amendment, if we assume that the corporations are within the State.

(b) If they are not within the State, their second contention is that the act is an attempt to regulate interstate commerce. If it have that effect it is illegal, for a tax on an agent of a foreign corporation for the sale of a product is a tax on the product, and, if the product be that of another State, it is a tax on commerce between the States. *Welton* v. *Missouri*, 91 U. S. 275; *Webber* v. *Virginia*, 103 U. S. 344; *Darnell & Son Co.* v. *Memphis*, 208 U. S. 113. This is the assertion of plaintiffs in error; defendants in error oppose a denial to the assertion and the denial is supported by the Supreme Court on the authority of *Brown* v. *Houston*, 114 U. S. 622; *Singer Sewing Machine Co.* v. *Brickell*, 233 U. S. 304. The basis of the denial and its support by the Supreme Court is that the automobiles had passed out of interstate commerce and had reached repose in the State, and blend with the other things of the

State, and became subject to intrastate regulation. It is doubtful if that be a justifiable deduction from the findings of the trial court. But comment is not necessary. It is the finding of the court that the automobiles were in the hands of the agents of the consigning corporations, and therefore, a tax against them was practically a tax on their importation into the State. It is not necessary to say it would be useless to send them to the State if their sale could be prevented by a prohibitive tax or one so discriminating that it would prevent competition with the products of the State. This is the ruling of the cases which we have cited. It is especially the ruling in *Darnell & Son Co.* v. *Memphis, supra.* The imposition of such a tax is practically the usurpation of the power of Congress over interstate commerce, and therefore illegal.

Judgment reversed and cause remanded for further proceedings not inconsistent with this opinion.

MR. JUSTICE PITNEY and MR. JUSTICE BRANDEIS dissent.

MICHIGAN CENTRAL RAILROAD COMPANY *v.* MARK OWEN & COMPANY.

CERTIORARI TO THE SUPREME COURT OF THE STATE OF ILLINOIS.

No. 209. Argued April 28, 1921.—Decided June 1, 1921.

1. Under a "uniform" interstate bill of lading providing that property not removed, by the party entitled to receive it, within 48 hours after the notice of its arrival, may be kept in car, depot or place of delivery of the carrier, subject to a reasonable charge for storage and to the carrier's responsibility as warehouseman only, or may, at the carrier's option, be stored in a public or licensed warehouse at the

owner's cost and risk, subject to a lien for the carrier's freight and other charges, the carrier remains liable *qua* carrier during the 48-hour period, pending delivery. P. 430.

2. A carload of goods, upon arrival at destination, was placed upon the railroad's public delivery track, and the consignee, having been notified, accepted the car, broke the seals thereon and proceeded to unload. *Held*, that this did not constitute a delivery of the goods and that a loss of part, occurring during the unloading and within the 48-hour period provided in the bill of lading *ut supra*, par. 1, must be borne by the railroad. P. 431.

291 Illinois, 149, affirmed.

CERTIORARI to review a judgment of the Supreme Court of Illinois affirming a judgment for damages, rendered in favor of the present respondent by the Appellate Court of that State upon an appeal from a contrary judgment of the Municipal Court of Chicago. The facts are stated in the opinion.

Mr. Frank H. Towner, with whom *Mr. Ralph M. Shaw* was on the briefs, for petitioner.

Mr. William B. Moulton, with whom *Mr. Joseph A. Bates* was on the brief, for respondent.

MR. JUSTICE MCKENNA delivered the opinion of the court.

Action in the Municipal Court of Chicago for damages for loss on several shipments of grapes, four car-lots, shipped in sound and merchantable condition.

On receipt of the shipments bills of lading were issued. The total loss is alleged to have been 126 baskets of grapes of the value of $23.30. The Municipal Court found against plaintiff (respondent here, and it will be so referred to). The judgment was reversed by the Appellate Court, First District of the State, and judgment awarded respondent which was affirmed by the Supreme Court of

the State, to which an appeal was granted because the Court of Appeals considered that the case involved questions of importance "on account of principal and collateral interests" which should be passed upon by the Supreme Court.

Our review is concerned with questions of law; the facts are undisputed. It is stipulated that the cars were transported by the Railroad Company from their respective points of origin to Chicago, arriving there at different days and times of day. Upon the arrival of each car it was placed on a public delivery track of the Railroad Company and notice thereof given. Respondent accepted each car, breaking the seals thereof. And it is stipulated that, at the time respondent started to unload, each of the cars contained the number of baskets and pounds of grapes received for transportation. The loss, whatever there was, occurred after the acceptance of the cars and after their unloading had commenced, and whether the Railroad Company is liable therefor, and in what capacity liable—whether as carrier or warehouseman, or at all—is the question in the case.

The answer depends upon the construction to be given to the first paragraph of section 5 of the bill of lading. It is as follows:

"Property not removed by the party entitled to receive it within forty-eight hours (exclusive of legal holidays) after notice of its arrival has been duly sent or given may be kept in car, depot, or place of delivery of the carrier, or warehouse, subject to a reasonable charge for storage and to carrier's responsibility as warehouseman only, or may be, at the option of the carrier, removed to and stored in a public or licensed warehouse at the cost of the owner and there held at the owner's risk and without liability on the part of the carrier, and subject to a lien for all freight and other lawful charges, including a reasonable charge for storage."

Regarding the words of the section merely, they are clear enough, and present no "double sense." But controversies have arisen and judicial judgments have divided upon them. The point of the controversies has been, and is, as to the relation of the carrier to a shipment within 48 hours after notice of its arrival has been duly sent or given, and the contentions upon the point are in sharp antagonism. That of respondent is that the Railroad Company during the 48 hours is responsible as a carrier, this relation not terminating until the expiration of that time. The contention of the Railroad Company is *contra*, and that it is liable neither as carrier nor as warehouseman,—not as carrier because the shipment had been delivered and accepted—not as warehouseman because no negligence has been proved against it. The Supreme Court decided against the contentions of the Railroad Company and held it liable for loss on all of the shipments. As to three of them we may say immediately, in disposition of them, respondent withdraws any claim on account of them and confines the issue to one car which was undoubtedly unloaded within 48 hours of the notice of its arrival. There is question of the other cars.

The importance of the issue, however, still remains, although it is concerned with only 31 baskets of grapes of the value of $8.68, and the difficulty of its determination is indicated by the fact of the diversity of judicial reasoning upon a like issue in other cases. And counsel have been at pains to set the cases in opposition with approving or disapproving comment of their own.

The differences of the cases cannot be reconciled and a review of them for the purpose of selection would manifestly extend this opinion to a great length. Their outside principle is simple enough; the bill of lading is a contract between the transportation company and him who is interested in the shipment, and legal when

within the policy and edicts of the law regulating that relation.[1]

By recurring to section 5 of the bill of lading, it will be seen that it supposes a contingency and provides for its occurrence. It supposes that property may not be removed when it has reached destination, and is available for delivery, and two periods of time are provided for. One of 48 hours after notice of the arrival of the property has been sent or given. During this time there is no declaration of the relation of the Railroad Company to the property. The other period commences at the expiration of the first or 48-hour period, during which the provision is that the property is subject "to carrier's responsibility as warehouseman only." The comparison has its significance and must be accounted for. Realizing this, the Railroad Company makes a distinction. Its contention is that, where delivery has been made of the property, as it insists was true in the case at bar, the responsibility of the Railroad Company as carrier immediately ceases. If, however, it is neither delivered nor removed within 48 hours after notice of its arrival, the responsibility of the Railroad Company thereafter is that of "warehouseman only."

To the distinction and the contention based upon it the Supreme Court of the State answered that the bill of lading provides for property "not removed"—not to property "delivered" or "not delivered," and it must be taken at its word.

The answer puts too much emphasis upon the distinction between property removed and property delivered.

---

[1] *Texas & Pacific Ry. Co.* v. *Reiss*, 183 U. S. 621; *Kansas City Southern Ry. Co.* v. *Carl*, 227 U. S. 639; *Georgia, Florida & Alabama Ry. Co.* v. *Blish Milling Co.*, 241 U. S. 190; *St. Louis, Iron Mountain & Southern Ry. Co.* v. *Starbird*, 243 U. S. 592; *Missouri, Kansas & Texas Ry. Co.* v. *Ward*, 244 U. S. 383; *Southern Ry. Co.* v. *Prescott*, 240 U. S. 632; *Erie R. R. Co.* v. *Shuart*, 250 U. S. 465.

The property here was not delivered; access was only given to it that it might be removed, and 48 hours were given for the purpose. Pending that time it was within the custody of the Railroad Company, the Company having the same relation to it that the Company acquired by its receipt and had during its transportation.

The bill of lading is definite, as we have pointed out, in its provisions and of the time at which responsibility of the Company shall be that of warehouseman, and by necessary implication, therefore, until that responsibility attaches, that of carrier exists.

All the elements of the case considered and assigned their persuasive force, we think the judgment of the Supreme Court should be and it is

Affirmed.

MR. JUSTICE McREYNOLDS, dissenting:

This cause is important because of what had been said concerning section 5 of the Uniform Bill of Lading, approved and recommended by the Interstate Commerce Commission after much consideration and repeated conferences between carriers and shippers, extending through four years.

In their report, 14 I. C. C. (1908), 346, 348, 349, 350, the Commission said:

"This proposed bill of lading—for the two forms may be considered as one in what we have further to say—is submitted for adoption by the carriers and use by the shipping public with considerable confidence. It is not claimed to be perfect, and experience may develop the need of further modifications, but it represents the most intelligent and exhaustive efforts of those who undertook its preparation to agree upon a bill of lading which should be reasonably satisfactory to the railroads and the public. It is, of course, more or less a compromise between oppos-

ing interests, because on the one hand it imposes obligations of an important character which carriers have not heretofore assumed, and on the other retains exemptions to which some shippers may object, and perhaps not without substantial reason. As we are advised, it is in some respects less favorable to the shipper than the local laws or regulations of one or more states, but is more favorable to the shipper than the local laws or regulations of most of the states. On the whole, it is believed to be the best adjustment which is now practicable of a controversy of long standing which affects the business interests of the entire country. . . . The circumstances under which the work of the joint committee has been conducted and the substantial agreement on most points by the different interests concerned, to say nothing of direct assurances from representatives of the carriers, warrant us in expecting that the assenting roads will adopt the bill upon our recommendation. We therefore assume that the railroads in Official Classification territory, whose proposed action was the subject of the original investigation, will adopt and use this bill, to the extent above indicated, from and after the date named for that purpose. We shall also expect that railroad carriers subject to the act outside of Official Classification territory will adopt and use this bill of lading to the same extent and from and after the same date. There may be peculiar conditions in western and southern territory which require some modifications of or additions to this standard bill, but the desirability of uniform usage is so great and the reasons for it so obvious as to justify the expectation that carriers in western and southern territory will adopt the bill in question to the fullest extent practicable without abridging any just privileges which their shippers now enjoy."

The language in controversy was not selected by the carriers alone; they reluctantly accepted the whole in-

strument rather than dictated it to others. *Texas & Pacific Ry. Co.* v. *Reiss*, 183 U. S. 621, holding that doubtful provisions should be resolved in the shipper's favor, is not applicable. The agreement ought to be construed and applied as one arrived at through deliberate negotiation by intelligent parties seeking to make some definite statement or modification of common-law rules concerning their rights and liabilities.

The carrier acknowledges receipt of "the property described . . . marked, consigned and destined as indicated below, which said carrier (which word is to be understood throughout this bill of lading as meaning any person or corporation in possession of the property under the bill of lading) agrees to carry to its usual place of delivery at said destination, if on its road, otherwise to deliver to another carrier on the route to said destination."

Among other things, section 1 provides:

"The carrier or party in possession of any of the property herein described shall be liable for any loss thereof or damage thereto, except as hereinafter provided. . . . When in accordance with general custom, on account of the nature of the property, or when at the request of the shipper the property is transported in open cars, the carrier or party in possession (except in case of loss or damage by fire, in which case the liability shall be the same as though the property had been carried in closed cars) shall be liable only for negligence, and the burden to prove freedom from such negligence shall be on the carrier or party in possession."

Section 5 follows:

"Property not removed by the party entitled to receive it within forty-eight hours (exclusive of legal holidays) after notice of its arrival has been duly sent or given may be kept in car, depot, or place of delivery of the carrier, or warehouse, subject to a reasonable charge for storage and to carrier's responsibility as warehouseman only, or

may be, at the option of the carrier, removed to and stored in a public or licensed warehouse at the cost of the owner and there held at the owner's risk and without liability on the part of the carrier, and subject to a lien for all freight and other lawful charges, including a reasonable charge for storage."

The Uniform Bill does not purport to specify all rights and obligations of the parties as between themselves, but leaves these as established by law, except when and as otherwise provided. Particularly, it does not undertake to define what shall constitute delivery to the consignee.

"In order to simplify the issues the respondent" confines its claim here to losses from car No. 22049—$8.68. The parties stipulated that this car "arrived in Chicago on October 8, 1914, was placed on a public delivery team track on October 9, 1914, at 8:00 A. M. o'clock; that notice of arrival and placement of said car was given to the plaintiff herein on October 9, 1914, at 9 A. M. o'clock; that plaintiff accepted said car, broke the seals thereon, and started to unload it on October 9, 1914, at 9:30 A. M. o'clock; and that the unloading of said car was completed by the plaintiff on October 9, 1914, at 6 P. M. o'clock. . . . That at the time the plaintiff accepted and started to unload each of said cars, every car contained the same number of baskets and pounds of grapes as were received by the defendant in said car for transportation at the point of origin thereof, named herein, and that at said time the doors of each of said cars were sealed with the same seals intact as were placed on them by the defendant when it received said grapes for transportation."

The circumstances accompanying acceptance and unloading are not revealed except as above stated. Whether these suffice clearly to establish final and complete delivery of possession of the freight to the consignee may be questioned, but mere consideration of the bill cannot

solve the difficulty. If, as matter of fact, the consignee was put into actual possession of the property within forty-eight hours, it must be clear that the carrier's liability as insurer ceased when he accepted control.

What constitutes delivery by a railroad carrier sufficient to change its responsibility from insurer to warehouseman has given occasion for much difference of opinion.

The so-called New York rule, the strictest against the carrier, "is stated to be that if the consignee is present, upon the arrival of the goods, he must take them without unreasonable delay; if he is not present, but lives at or in the immediate vicinity of the place of delivery, the carrier must notify him of the arrival of the goods, and then he must have a reasonable time to remove them; if he is absent, unknown or cannot be found, the carrier may store them; and if, after notice of the arrival of the goods, the consignee has had a reasonable opportunity to remove them, and does not, he cannot hold the carrier longer as an insurer." Hutchinson on Carriers, 3rd ed., § 708.

The Massachusetts rule has been thus stated: "All that could be required of railways was a safe deposit of the goods upon the platform or in the warehouse of the road at the end of the transit, to await delivery to the consignee, when he should call for them, and that from the time of such deposit, even without notice by the carrier to the consignee, the liability of the former was changed from that of common carrier to warehouseman." Hutchinson on Carriers, 3rd ed., § 702.

The New Hampshire rule continues the carrier's liability as insurer until the consignee has had a reasonable time to receive the goods after their arrival at destination. During that period "The servants of the carrier still continue in charge of them. They are equally shut off from observation and the oversight of others as when in transit; and if they are lost, damaged, or purloined, he

has no greater opportunity of ascertaining or proving by whose fault or negligence it was done, than if such loss had occurred during the transportation. Consequently, the same reasons for holding the carrier to extraordinary responsibility during the transportation of the goods exist after their arrival, at least, until the owner or consignee shall have had an opportunity to take them in charge." Hutchinson on Carriers, 3rd ed., § 704.

Undoubtedly, the Uniform Bill was prepared with the above rules in mind. It did not adopt any of them, but left the matter to which they relate for determination by the courts.

It should be noted that the bill acknowledged receipt of property "which said carrier . . . agrees to carry to its usual place of delivery at said destination, if on its road, otherwise to deliver to another carrier on the route to said destination." And further, that "the carrier or party *in possession* of any of the property herein described shall be liable for any loss thereof or damage thereto, except as hereinafter provided."

The special purpose of section 5 was to protect the carrier by placing an extreme limit upon the time during which freight might remain with it without charge for storage; and also to define the carrier's right and obligation thereafter. The unnecessary delay incident to unloading and the undue utilization of railroad cars and warehouses by consignees for storage purposes had seriously hindered prompt movement of freight, and proper employment of equipment. This section does not purport to establish any rule of liability during the forty-eight hours, but leaves that to be determined by application of the common law to the circumstances. To say that a carrier insures for forty-eight hours although the consignee has taken actual custody of the goods would seem an absurd conclusion. And the practical impossibility of stationing an agent at every car within

a great terminal while freight is being removed by thousands of consignees and their agents—a necessary precaution if thefts or mistakes by any one of them must be prevented—makes it manifest that the Interstate Commerce Commission would not have sanctioned the responsibility now claimed and that the carriers would not have acquiesced. I cannot think there was purpose to burden carriers beyond the most stringent of the rules above referred to.

The fair inference from the facts stipulated is that the consignee received possession and control of his goods before the loss occurred. A carrier's responsibility as insurer depends upon exclusive possession and control and must cease when these end. The modified one prescribed by the Uniform Bill for goods shipped in open cars where such possession and control is difficult or impossible to maintain gives practical recognition to the real basis upon which liability rests. Here the car was opened, examined, accepted and apparently thereafter remained in charge of the consignee. Yet, it is said the delivery was not sufficient to terminate liability as insurer but that this continued because of section 5, which in plain terms refers only to removal. It must not be forgotten that we are not dealing here with a question of due care but with the absolute liability of an insurer.

It is not good reasoning to conclude that because an extreme limit is placed upon the time during which freight may remain in a car without charge, therefore the carrier's liability as an insurer continues during such time.

The Uniform Bill is in common use and the opinion of the court will be far-reaching. The subject therefore seems sufficiently important to demand an indication of the reasons which lead me to dissent.

HEIRS OF GARLAND, DECEASED, v. CHOCTAW NATION.

APPEAL FROM THE COURT OF CLAIMS.

No. 129. Argued January 12, 1921.—Decided June 1, 1921.

The Choctaw Nation constituted four persons a delegation to represent it in pressing money claims against the United States, promised them a percentage for their services rendered and to be rendered, and, when an appropriation was secured from Congress as a result of many years of negotiations and proceedings during which the delegates were succeeded by others, passed an act appropriating the agreed percentage out of the fund held by the United States, with a direction that it be paid to the two existing delegates, as successors of the preceding delegates, to enable them "to pay the expenses and discharge the obligation in the prosecution of said claim, and to settle with the respective distributees of said delegation," the act further declaring that payment to the two delegates should be accepted as a complete payment and final discharge of all obligations of the Choctaw Nation to the delegation and as a full and final settlement of the amount due under its contract. Upon these and other subsidiary facts,—

Held: (1) That the obligation of the Choctaw Nation was to the delegates individually and not to the delegation as a body, and that the two existing delegates, in collecting and disbursing the money, were agents of the Nation merely, so that its payment to them did not discharge the Choctaw Nation's obligation to the heirs of a former delegate who had rendered part of the service. P. 444.

(2) That while, under the act authorizing this suit (May 29, 1908, c. 216, § 5, 35 Stat. 444, 445), any right of such heirs to recover on account of service and expenditures by their ancestor must be determined not upon his contract but upon the principle of *quantum meruit*, a petition alleging valuable services should not be rejected upon the technical ground that it asserted and relied upon the contract. P. 445.

54 Ct. Clms. 55, reversed.

THE case is stated in the opinion.

Mr. Harry Peyton, with whom *Mr. James K. Jones* and *Mr. W. N. Redwine* were on the briefs, for appellants.

The Solicitor General for appellee.

MR. JUSTICE MCKENNA delivered the opinion of the court.

This suit is based, as its ultimate foundation, on an Act of Congress of May 29, 1908, c. 216, § 5, 35 Stat. 444, 445, which provides as follows:

"That the Court of Claims is hereby authorized and directed to hear and adjudicate the claims against the Choctaw Nation of Samuel Garland, deceased, and to render judgment thereon in such amounts, if any, as may appear to be equitably due. Said judgment, if any, in favor of the heirs of Garland shall be paid out of any funds in the Treasury of the United States belonging to the Choctaw Nation, said judgment to be rendered on the principle of quantum meruit for services rendered and expenses incurred. Notice of said suit shall be served on the governor of the Choctaw Nation, and the Attorney General of the United States shall appear and defend in said suit on behalf of said nation."

The case is not easily stated, though simple in ultimate resolution. It turns upon the relation of Samuel Garland and his right to compensation as one of the delegation of the Choctaw Nation to procure for the Nation a recognition and payment of money due from the United States in settlement of or in payment for lands east of the Mississippi River ceded to the United States under certain treaties. The case as made by the petition is this: Samuel Garland was a member of the Choctaw Tribe of Indians and in 1853 he, with three others, were created a delegation and authorized to settle all unsettled business between the Choctaw Nation and the United States. In

1855 the Chiefs of the Nation agreed to pay the delegation, naming them, twenty per cent. upon all the claims arising to the Nation or individuals for their services in negotiating the treaty and for other services which were to be rendered thereafter in Washington.

In pursuance of this authority they entered into negotiations with the United States for settlement of the controversies concerning what, if anything, was due on account of matters growing out of certain treaties (they are set out in the petition) and for the payment for lands ceded to the United States by the Choctaws.

The result was the direction by an Act of Congress (1888, 25 Stat. 239) of the payment to the Choctaw Nation of the sum of $2,858,798.62 in satisfaction of a judgment of the Court of Claims in favor of the Nation.

On February 25, 1888, the Nation, on account of the death of Samuel Garland, and for the purpose of paying his estate and the other members of the delegation, appointed Campbell LeFlore and Edmund McCurtain agents of the Nation to make requisition upon the United States for the amount due Garland and the other delegates for the services rendered the Nation, and for moneys expended by them. Twenty per cent. of the amount appropriated by Congress to pay the judgment of the Court of Claims was the amount fixed to be paid.

The appointment of LeFlore and McCurtain was without the consent of Garland's estate or the consent of his heirs.

LeFlore and McCurtain collected from the United States $638,919.43, the same being twenty per cent. of the judgment of the Court of Claims, and were charged with the duty of distributing the same equally.

In 1889 they paid to the heirs of Garland $43,943.20, but refused to pay the balance due amounting to $115,786.65.

The Nation has never denied the indebtedness to the

estate of Garland but recognized it by an act passed by its General Council in 1897 and authorized its payment by warrants issued by the national auditor.

The act was vetoed for the reason that it would exhaust the available funds in the treasury of the Nation and force the closing of the Choctaw schools. The estate having no power to sue the Nation, could not do so until authorized by an act of Congress.

The petition sets forth the respective interests of the heirs of Garland.

The Court of Claims found some of these facts but found other facts and concluded from them that the contract of the Nation was with the delegates as a body and that the Nation was not responsible for any failure on the part of LeFlore to pay the estate of Garland all that was due Garland. In other words, the court held that LeFlore and McCurtain were not the "'agents' of the Choctaw Nation, for whose misapplication of the fund, if they did misapply it, the Nation was liable," but that they were when dealt with "the delegation, the successors of the original delegation, standing in such relation to the Nation and to other members of the delegation or their beneficiaries that the payment made to them as it was made, is to be held an acquittance of the nation."

The conception of the opinion is that the delegation was a unit, constituted such and intended to act as such, the survivors or even the survivor of those appointed succeeding to the powers and rights of deceased delegates, that the Nation so regarded and so dealt with them, and that, therefore, LeFlore and McCurtain succeeded to the rights of the delegation, could receive the powers conferred upon them by the enactment of February 25, 1888, and could accept any sums that came to them under that enactment "as a complete payment and a final discharge of all debts and obligations of the Choctaw Nation to" the delegation under the contract of 1853.

This being the conception of the court its final conclusion was, that the payment made to LeFlore and McCurtain served to discharge the Nation from any further liability to the delegation or any member thereof or their representatives, and on that ground it ordered the case to be dismissed.

As we have seen, there was a delegation constituted, and Garland was a member of it, and its compensation was agreed to be "twenty per cent. upon all claims arising or accruing to" the "Nation or to individuals under the treaty of June 22, 1855, for their services in negotiating said treaty and for other services which are to be rendered hereafter at Washington." It will be observed there was no disposition of the amount that might be received, nor distribution of it nor of the services that might be required to be performed, nor designation of who was to receive or control it.

Delegates, however, died and others were appointed in like generality, and finally there was a concentration in LeFlore and McCurtain, and, the National Council, reciting that the delegates preceding LeFlore and McCurtain had recovered from the United States $2,858,798.62, and that the delegates were entitled to twenty per cent. of the amount, that percentage was appropriated out of the fund and directed to be paid to LeFlore and McCurtain as delegates and successors of the delegates of 1853, "to enable them [LeFlore and McCurtain] to pay the expenses and discharge the obligation in the prosecution of said claim [the claim of the Nation against the United States], and to settle with the respective distributees of said delegation."

There was also an appropriation for other sums due the delegation and it was enacted that all of the sums should be paid to LeFlore and McCurtain, describing them as successors to the other delegates and when so paid to be accepted "as a complete payment and a final

discharge of all debts and obligations of the Choctaw Nation to said delegation" under the contract of their appointment. And it was enacted that the amounts provided to be paid should "be accepted as full and final settlement of the amount due under their respective contracts" and the remainder of the amount appropriated by Congress should be retained in the Treasury of the United States, subject to the legislation and requisition of the Nation.

In 1873, however, there was recognition of liability to the delegates and it was provided that the National Treasurer be authorized to receive the appropriation and to pay (among other obligations) "20 per cent of such appropriation for the delegates of 1853 and 1854, to enable them to discharge all liabilities and obligations under said contracts [there were other contracts than that with the delegates] and all expenses necessarily incurred in recovering said claim." It was provided that all just debts due the Nation from the delegation should first be deducted.

The enactment of 1888 was a deputation to LeFlore and McCurtain to collect and disburse the congressional appropriation, and they became for that purpose the agents of the Nation, not the agents of the delegation, and it was the first deputation of that power. By a prior enactment the payments made to the delegation were from the National Treasury, and another (1867) provided for such payment. In other words, until the enactment of February 25, 1888, the control of the appropriation was in the Nation and payments out of it by the Nation.

Our conclusion, therefore, from the record, is not that of the Court of Claims. There was implication, at least, of liability to the delegates individually. And this was the understanding of the delegates. LeFlore so understood it and the payment made to Garland's estate was a recognition of it. The payment is distinctly in opposition

to the contention of the Government and the conclusion of the Court of Claims. Both the contention and conclusion assert a unity in the delegation, the rejection of any individual payment or reward to the delegates, a time limit upon compensation for their services, however great or effective, a kind of *jus accrescendi* in the successors of deceased delegates. If such right existed at all, it would have existed even though the succession had come a moment before the congressional appropriation was made, and no services whatever rendered by the successors of deceased delegates.

And these views must have impressed Congress, and induced its enactment authorizing suit against the Choctaw Nation. Not, it is true, upon the contract, because other services than Garland's were rendered in procurement of the appropriation and should be considered, and Congress therefore required the judgment in the suit "to be rendered on the principle of quantum meruit" for what Garland did and expended.

It is objected, however, that the suit was not asserted or prosecuted on that basis and that there is no description of the services of Garland or their value, and therefore no elements for a judgment established, such as the statute authorized. It authorized, the explicit contention is, a judgment on a quantum meruit, and that therefore "no judgment can be rendered on a petition which seeks to recover merely upon the ground of a contract."

The contention under the facts disclosed in the petition is technical. The petition showed services rendered and, if the petition be true, valuable services—and for them there should have been recovery if the Nation was liable, and we think it was. How much we do not say nor did the Court of Claims consider, it being of opinion that the Nation was not liable for anything. Upon the return of the case it may determine the amount due Garland, if

anything, dependent upon what his services contributed in securing the congressional appropriation.

The judgment of the Court of Claims must therefore be reversed and it is so ordered.

Reversed.

MR. JUSTICE MCREYNOLDS and MR. JUSTICE CLARKE took no part in the consideration and decision of this case.

UNITED STATES *v.* AMERICAN CHICLE COMPANY.

ERROR TO THE DISTRICT COURT OF THE UNITED STATES FOR THE SOUTHERN DISTRICT OF NEW YORK.

No. 175. Argued January 24, 1921.—Decided June 1, 1921.

The Act of October 22, 1914, c. 331, 38 Stat. 754, imposed stamp taxes in respect of scheduled articles and commodities "manufactured, sold, or removed for sale," including chewing-gum, taxed on its retail value, and required manufacturers at the end of each month to file a declaration that no such article or commodity had, during the preceding month, been removed, carried, sent, or caused, suffered or known to have been removed, carried or sent from their premises, other than such as had been duly taken account of and charged with the stamp tax. *Held* that, whether the tax was levied in respect of the sale or of the manufacture, a payment by the manufacturer was contemplated, and, when chewing-gum had been manufactured and prepared for sale, its removal to other factories and warehouses of the manufacturer for the purpose of future sale to wholesalers rendered the manufacturer liable. P. 448.

Reversed.

THE case is stated in the opinion.

The Solicitor General, with whom *Mr. R. P. Frierson* was on the brief, for the United States.

Mr. Charles P. Spooner for defendant in error.

MR. JUSTICE HOLMES delivered the opinion of the court.

The defendant in error, the petitioner below, made a claim against the United States for $6,318.56 paid by it for revenue stamps under the Act of October 22, 1914, c. 331, § 5, and Schedule B, 38 Stat. 745, 754, 763, (extended by Resolution of December 17, 1915, c. 4, 39 Stat. 2, through December 31, 1916,) which it alleges were unused after January 1, 1916, and therefore were to be redeemed under § 24 of the Act of October 22, 38 Stat. 764, and the Act of September 8, 1916, c. 463, § 411, 39 Stat. 756, 793, the stamps having been purchased within two years of the application for redemption as required by the latter act. The United States demurred to the petition and the petitioner recovered in the District Court. The question is whether the petition discloses facts upon which it can be said that the goods were not "removed for sale" within the meaning of § 5, which levies the tax upon the things mentioned in Schedule B "manufactured, sold, or removed for sale."

The petitioner manufactures chewing gum, one of the articles mentioned in Schedule B, and when the product is prepared transports it from the place of preparation, in the language of the petitioner, "to one of its other factories or warehouses, as the state of the stock therein, or the condition of the trade, may demand." The goods concerned "had been removed from the factory at which they were manufactured and prepared for sale, to other factories or warehouses of petitioner in other parts of the United States, as hereinbefore set forth." They had upon them uncancelled revenue stamps, but belonged to the petitioner and were subject to no contract of sale on September 9, 1916, when the above mentioned Act of September 8, 1916, went into effect,

providing for the redemption of stamps, as we have said. The petitioner sells only to wholesale dealers, never at retail. By its own statement it must be taken to have removed the goods for the purposes of sale to such places as seemed most likely to offer a market, although no sale had taken place. It is said that upon the language of the petition the greater part of the goods may have been sent to other factories. But it is for the petitioner to state a case and so far as appears, and probably in fact, all the removals had the same end in view.

We may assume without deciding that the tax is levied in respect of the sale rather than of the manufacture of goods, but that throws little light upon the question of the precise moment when it falls due. The words "sold, or removed for sale" clearly mean that it falls due in some cases before a sale is complete. No one we presume would doubt that if the goods were removed for the purpose of satisfying an outstanding contract for a certain amount of chewing gum, the tax would be due at the moment of the removal although the goods were not yet appropriated to the contract in any binding way. It seems to us hardly more doubtful that the same would be true if goods were removed by a manufacturer to put into the window of a retail shop kept by it on the other side of the street. If we are right these examples show that removal for the purpose of forwarding a sale is a removal for sale within the meaning of the act. But on the face of the petition that was the object of the transfer of these goods to other parts of the United States.

Notwithstanding the assumption that the tax is levied in respect of sale rather than of manufacture we agree with the Government that the statute contemplates a payment by the manufacturer. This is shown by §§ 17–19. By § 20 every manufacturer of any article provided for in Schedule B is required to file a monthly declaration that no such article has been "removed . . . from

the premises of such manufacturer . . . other than such as have been duly taken account of and charged with the stamp tax," under a penalty for neglect. This seems to us to confirm the conclusion that we already have indicated. If the petitioner should send a mass of chewing gum from its factory in New Jersey or New York to a more promising market in another State it does not appear to us that it could escape the obligation of § 20 by showing that although the gum unquestionably had left the premises of the manufacturer it was destined to another warehouse that the petitioner also owned. That does not seem to us the natural or the rational meaning of the words used. It is said that the construction of a similar Act of June 13, 1898, c. 448, 30 Stat. 448-463, was the same while that was in force, and that presumably the later act adopted the construction. The argument is another confirmation of the view that we adopt.

The tax is four cents upon packages of not more than $1.00 of actual retail value, with four cents for each additional dollar, but this rough reference to retail price is far from implying that the package must have been sold in order to fix the tax. It appears to us entirely natural that Congress should look to the original place of manufacture as the place for the identification of the taxable goods and to the moment of leaving it, except in exceptional cases, as the time for the attaching of the tax. It seems to us to have done so in sufficiently unmistakable terms.

Judgment reversed.

UNITED STATES v. YUGINOVICH ET AL.

ERROR TO THE DISTRICT COURT OF THE UNITED STATES FOR THE DISTRICT OF OREGON.

No. 523. Argued March 10, 1921.—Decided June 1, 1921.

1. Congress, under the taxing power, may tax intoxicating liquors, notwithstanding their production is prohibited; and the fact that it does so for a moral end as well as to raise revenue is not a constitutional objection. P. 462.
2. Section 3257 of the Revised Statutes, which, for the purpose of protecting the revenues, made it an offense for a distiller to defraud, or attempt to defraud, the United States of a tax on the spirits distilled by him, and penalized the offense by forfeiture of the distillery, etc., and heavy fine and imprisonment, was superseded as respects persons manufacturing spirits for beverage purposes, by § 35, Title II, of the National Prohibition Law, which imposes a double tax and an additional penalty of $500 or $1,000 only, thus covering practically the same acts and inflicting a lighter penalty. P. 463.
3. The repealing effect of this section of the later act is determined in full recognition of its declaration that the act shall not "relieve any person from any liability, civil or criminal, heretofore or hereafter incurred under existing laws," but in the light also of settled principles governing the construction of penal statutes, the Eighteenth Amendment, and the provisions of the act itself making unlawful the possession of intoxicating liquors, or property designed for the manufacture thereof, and providing for their destruction. P. 463.
4. Section 3279 of the Revised Statutes, requiring distillers of spirits to exhibit a sign "Registered Distillery" and punishing violations by fine, § 3281, making it an offense, punishable by fine and imprisonment, to carry on the business of a distiller without giving bond, and § 3282, punishing in like manner the making of mash in any building other than a distillery authorized by law, were also superseded by the National Prohibition Law, in so far as concerns the production of intoxicating liquor for beverage purposes. P. 464.

266 Fed. Rep. 746, affirmed.

ERROR to review a judgment of the District Court sustaining a motion to quash, and a demurrer to, an indictment. The facts are stated in the opinion, *post*, 457.

Mrs. Annette Abbott Adams, Assistant Attorney General, with whom *Mr. Leonard B. Zeisler*, Special Assistant to the Attorney General, was on the brief, for the United States:

The revenue laws can be said to be inconsistent with the National Prohibition Act only in so far as they interfere with its enforcement. In so far as their enforcement is an aid to the enforcement of the National Prohibition Act, it cannot be said in the face of the express provision of Title II, § 35, that the latter act repeals them.

It has frequently been ruled that there is no inconsistency between taxing an article and prohibiting its production entirely. *License Tax Cases*, 5 Wall. 462; *Foster* v. *Speed*, 120 Tennessee, 470; Cooley on Taxation, 3d ed., p. 14; *Youngblood* v. *Sexton*, 32 Michigan, 406; *Conwell* v. *Sears*, 65 Ohio St. 49; *State* v. *Moeling*, 129 La. Ann. 204; *Carpenter* v. *State*, 120 Tennessee, 586; *Webster* v. *Commonwealth*, 89 Virginia, 154; *State* v. *Smiley*, 101 N. Car. 709; *State* v. *Smith*, 126 N. Car. 1057; *Commonwealth* v. *Nickerson*, 236 Massachusetts, 281.

Applying the principle of these cases to the case at bar, it is clear that the provision of Title II, § 35, of the National Prohibition Act, that the act shall not relieve anyone from paying the internal revenue tax imposed upon distilled spirits, should be construed to mean that the tax must be paid upon such spirits even though they are distilled without a permit. That is its literal meaning and the one best calculated to effect the purposes of the act. In view of the provision of Title II, § 3, that "all the provisions of this act shall be liberally construed to the end that the use of intoxicating liquor as a beverage

may be prevented," that is the construction which must be adopted.

The purpose of the provision that "upon evidence of such illegal manufacture or sale the tax shall be assessed against and collected from the person responsible for such illegal manufacture or sale, in double the amount now provided by law," is merely to confer upon the Commissioner of Internal Revenue that power to assess taxes where they have not been paid in the manner provided by law, which was conferred upon him by Rev. Stats., § 3182, generally, and by Rev. Stats., § 3253, where distilled spirits are removed from the place where they were distilled without paying the tax upon them and without being deposited in a bonded warehouse. This power does not come into existence until after the distiller has failed to perform his duty with regard to paying the tax on distilled spirits as defined by other laws.

But the National Prohibition Act contains no provision as to the amount of the tax, nor how it shall be assessed, nor how or when it shall be paid, nor any measures to prevent its evasion. It is obvious, therefore, that for direction on all these matters the revenue laws must be looked to. If the tax is not paid when it is due, the United States is defrauded and the distillers subjected to the penalties provided in Rev. Stats., § 3257.

The prevention of the secret distillation of spirits is as necessary to the prevention of their distillation without a permit as it is to prevent the evasion of the government tax on such spirits, and measures calculated to prevent such secret distillation do not interfere with but, on the contrary, are of material assistance in carrying out the purpose of the National Prohibition Act. It will not be contended that the sections here involved are actually inconsistent with any of its provisions. The failure of the National Prohibition Act to provide any means of preventing the evasion of the tax which

under its terms is imposed upon distilled spirits shows that they were intended to be continued in force.

It may be argued, however, that although the revenue laws are not actually inconsistent with the National Prohibition Act, they are repealed by it because it covers the whole subject-matter of the revenue laws and contains provisions plainly showing that it was intended as a substitute for those laws.

This contention is clearly unsound. The National Prohibition Act does not provide a substitute for the system of government supervision of the production of distilled spirits established under the revenue laws. The only change which it makes in that respect is that since the act came into effect no distilled spirits can be produced at all except when authorized by a permit issued by the Commissioner of Internal Revenue, and then only in accordance with regulations prescribed by him and by other provisions of the act, none of which are in conflict with the provisions of the revenue laws. This is a necessary deduction from the fact that under the National Prohibition Act all distilled spirits, whether produced with or without a permit, are subject to an internal revenue tax.

Since the act expresses the extent to which it was intended to repeal prior laws, the rule that, where a later act covers the same subject-matter as a prior one, it operates as an implied repeal of such prior act, would have no application, even if the National Prohibition Act did cover the same subject-matter as the revenue laws. *United States* v. *Claflin*, 97 U. S. 546; *Henderson's Tobacco*, 11 Wall. 652; *Great Northern Ry. Co.* v. *United States*, 155 Fed. Rep. 945, 953, affd. 208 U. S. 452.

It may be argued, however, that although the provisions of the revenue laws are not actually inconsistent with those of the National Prohibition Act, an intention to repeal the former must be presumed because the

penalties embraced by the later statute are lighter than those imposed by the earlier one for the same offenses. But this presumption applies only where the offenses denounced by both statutes are the same. It does not apply if each offense embraces an element not embraced in the other, as is the case here.

It is true that under some circumstances the same act may constitute a violation of both statutes, but since the offenses denounced by the revenue laws are not the same as those denounced by the National Prohibition Act, a person committing such an act may be prosecuted under both statutes. *Carter* v. *McClaughry*, 183 U. S. 365, 394; *Gavieres* v. *United States*, 220 U. S. 338; *Ebeling* v. *Morgan*, 237 U. S. 625.

The act shows clearly the intention that a prosecution under it should not be a bar to prosecution for the same act if that act also constitutes an offense under the revenue laws, for it provides in Title II, § 35, "Nor shall this act relieve any person from any liability, civil or criminal, heretofore or hereafter incurred under existing laws."

The decisions of the lower federal courts sustain the Government's contentions. *United States* v. *Sohm*, 265 Fed. Rep. 910; *United States* v. *One Essex Touring Automobile*, 266 Fed. Rep. 138; *United States* v. *Turner*, 266 Fed. Rep. 248. *Contra: United States* v. *Windham*, 264 Fed. Rep. 376; *United States* v. *Puhac*, 268 Fed. Rep. 392; *United States* v. *Stafoff*, 268 Fed. Rep. 417.

Mr. Ransom H. Gillett, with whom *Mr. Barnet Goldstein* and *Mr. Walter Jeffreys Carlin* were on the brief, for defendants in error:

Sections 3257, 3279, 3281, and 3282, Rev. Stats., are contrary to the Constitution as amended by the Eighteenth Amendment. The revenue laws are for the purpose of aiding the collection of the government revenue and

taxes. *United States* v. *Hill*, 123 U. S. 681, 686; *United States* v. *Howell*, 20 Fed. Rep. 718, 719; *Hutton* v. *Terrill*, 255 Fed. Rep. 860, 862. These sections, therefore, are not penal statutes intended to punish violations of a statute or the Constitution, but are mere means to assure the payment of taxes imposed in other sections of the same acts upon lawful and constitutional enterprises. *Edwards* v. *Wabash Ry. Co.*, 264 Fed. Rep. 610.

The constitutional policy of the United States on the liquor question is now shown by the Eighteenth Amendment, and these taxing statutes passed fifty years ago cannot be continued in opposition to that policy. *License Tax Cases*, 5 Wall. 462, 474; *Knowlton* v. *Moore*, 178 U. S. 41, 61. "Subject to a compliance with the limitations in the Constitution, the taxing power of Congress extends to all usual objects of taxation." *Knowlton* v. *Moore*, *supra*. Certainly the power does not extend to acts prohibited by the Constitution itself. The acts for which a tax is sought to be imposed and collected from the defendants are acts forbidden by the Constitution and made criminal by a statute passed to carry into effect the constitutional provision. While this court has never passed directly upon the proposition of laying a tax upon crime, it is a fundamental principle of morality and justice, no less than an indispensable requirement of a sound public policy, that Congress cannot lay a tax and attempt to collect a revenue from an act that is forbidden by the Constitution. See *License Tax Cases*, *supra*, 469; *People* v. *Raynes*, 3 California, 366.

The enforcement provisions of § 5, Title I, and § 28, Title II, of the National Prohibition Act, merely confer the power to use existing governmental agencies formerly used to enforce laws now repealed. The intent of Congress was simply to turn over to the proper officers to enforce the new law the machinery built up in enforcing the prior law, and this fact in itself is an indication of the

legislative intent to repeal existing laws designed to enforce payment of a tax.

Section 35 of Title II, furnishes no authority for holding that the revenue laws affecting the manufacture of intoxicating liquors are not repealed by the constitutional provision. That section provides that it "shall not relieve anyone from paying any taxes or other charges imposed upon the manufacture or traffic in such liquor." "Such liquor" means liquor the manufacture and sale of which is permitted by the act, *i. e.*, liquor for non-beverage purposes and wine for sacramental purposes. The clause providing that "all provisions of law that are inconsistent" with the act are repealed, expressly repeals the sections of the Revised Statutes here in question. Those sections provide for a license for and a tax on the manufacture of that kind of liquor the manufacture of which is forbidden by the act itself, and hence are provisions of law "inconsistent" with the National Prohibition Act.

When Congress seeks to superimpose upon the punishment for violation of the National Prohibition Act the additional punishment it heretofore had imposed for violation of the internal revenue laws, it clearly has exceeded its powers and infringed the constitutional rights of citizens under the Fifth and Sixth Amendments.

The sections of the Revised Statutes relating to intoxicating liquors were repealed by the National Prohibition Act. With the adoption of the Eighteenth Amendment the public policy of the Nation changed and the liquor traffic became in itself an illegal and improper business. The National Prohibition Act was passed in furtherance of this changed public policy; it was intended to provide a complete system, in and of itself, for the regulation of intoxicating liquors for beverage and non-beverage purposes. Under these circumstances the well-known rule of implied repeal of statutes must be

applied. 22 Cyc. 1606; *United States* v. *Ranlett*, 172 U. S. 133, 140, 141; *Daviess* v. *Fairbairn*, 3 How. 636; *New Jersey Steamboat Co.* v. *The Collector*, 18 Wall. 478; *Henderson's Tobacco*, 11 Wall. 652, 657; *United States* v. *Barr*, 24 Fed. Cas. 1016, 1017; *United States* v. *Cheeseman*, 25 Fed. Cas. 416; *Rogers* v. *Nashville &c. Ry. Co.*, 91 Fed. Rep. 299, 323.

The National Prohibition Act is a penal, regulatory, and prohibitive statute. The Revised Statutes, *supra*, are tax and revenue statutes pure and simple. There is a basic repugnancy that cannot be overcome, and even the attempted saving clause of the National Prohibition Act is not sufficient to prevent the application of the well-settled rules of law.

The National Prohibition Act also comes within the rule that a statute covering the whole subject-matter of a former one, adding offenses and varying the procedure, operates, not cumulatively, but by way of substitution, and impliedly repeals the former. *United States* v. *Claflin*, 97 U. S. 546, 551; *Norris* v. *Crocker*, 13 How. 429, 438.

In this connection the rule of clemency has application. A subsequent statute imposing milder penalties impliedly repeals any former act on the subject. *Smith* v. *State*, 1 Stew. 506; *State* v. *Whitworth*, 8 Port. 434; *People* v. *Tisdale*, 57 California, 104; *Hayes* v. *State*, 55 Indiana, 99; *United States* v. *Windham*, 264 Fed. Rep. 376. In every instance, the penalties for violations set forth in the National Prohibition Act are not as severe as those contained in the Revised Statutes.

Mr. Wayne B. Wheeler, by leave of court, filed a brief as *amicus curiæ*.

MR. JUSTICE DAY delivered the opinion of the court.

This case is here under the Criminal Appeals Act. 34 Stat. 1246. The indictment is in four counts.

The first count, based on § 3257 of the Revised Statutes, 6 Comp. Stats., § 5993, charges the defendants with unlawfully engaging in the business of distillers within the intent and meaning of the internal revenue laws of the United States; and that in fact they did distill spirits subject to the internal revenue tax imposed by the laws of the United States; and did defraud and attempt to defraud the United States of the tax on said spirits. The second count, based on § 3279 of the Revised Statutes, 6 Comp. Stats., § 6019, charges that the defendants failed to keep on the distillery, conducted by them, any sign exhibiting the name or firm of the distiller, with the words "Registered Distillery," as required by statute. The third count, based on § 3281 of the Revised Statutes, 6 Comp. Stats., § 6021, charges the defendants with carrying on the business of distilling within the intent and meaning of the internal revenue laws of the United States without giving the bond required by law. The fourth count, based on § 3282 of the Revised Statutes, 6 Comp. Stats., § 6022, charges the defendants with unlawfully making a mash, fit for distillation, in a building not a distillery duly authorized by law.

The defendants interposed a motion to quash the indictment upon the grounds that the acts of Congress under which the same was found were repealed before the finding of the indictment, and that the acts charged to have been committed by them were after the date upon which the Eighteenth Amendment to the Federal Constitution and the Volstead Act became effective. Defendants also filed a demurrer to the indictment on practically the same grounds. The motion to quash and the demurrer were sustained by the District Court. 266 Fed. Rep. 746.

The sections of the Revised Statutes may be summarized as follows: Section 3257 makes it an offense to defraud or attempt to defraud the United States of a tax

upon spirits distilled by one carrying on the business of a distiller; provides for forfeiting the distillery and the distilling apparatus and all spirits found in the distillery or on the distillery premises, and subjects the offender to a fine of not less than $500 or more than $5,000, and imprisonment of not less than six months or more than three years. Section 3279 requires distillers to exhibit on the outside of their place of business a sign with the words: "Registered Distillery." A violation of this section subjects the offender to a fine of $500. Section 3281 makes it an offense to carry on the business of a distiller without having given bond. For such offense the penalty is a fine from $1,000 to $5,000 and imprisonment not less than six months or more than two years. Section 3282 makes it penal to make or permit mash to be made in any building other than a distillery authorized by law. A violation of this section subjects the offender to a fine of not less than $500 or more than $5,000, and imprisonment of not less than six months or more than two years.

These statutes have long been part of the federal internal revenue legislation, and were passed under the authority of the taxing power conferred upon Congress by the Constitution of the United States. At the time of their enactment it was legal, so far as the Federal Government was concerned, to manufacture and sell ardent spirits for beverage purposes. The Government derived large revenue from taxing the business, which it sought to realize and protect by the system of laws of which the sections in question were a part. This policy was radically changed by the adoption of the Eighteenth Amendment to the Federal Constitution, and the enactment of legislation to make the Amendment effective. The Eighteenth Amendment in comprehensive and clear language prohibits the manufacture or sale of intoxicating liquors in the United States for

beverage purposes, and confers upon Congress the power to enforce the Amendment by appropriate legislation. To this end, Congress passed a national prohibition law known as the Volstead Act. 41 Stat. 305. It is a comprehensive statute intended to prevent the manufacture and sale of intoxicating liquors for beverage purposes.

Before taking up the sections of the Revised Statutes, some provisions of the Volstead Act may be appropriately referred to. Section 3, Title II, provides that after the Eighteenth Amendment to the Constitution of the United States goes into effect it shall be illegal to manufacture, sell, barter, transport, import, export, deliver, furnish or possess any intoxicating liquor except as authorized in the act. Liquor for non-beverage purposes and wine for sacramental purposes may be manufactured, purchased, sold, bartered, transported, imported, exported, delivered, furnished and possessed, but only as in the act provided, and the Commissioner of Internal Revenue may issue permits therefor. The act contains many provisions to make effective the purposes declared in § 3. Section 25 makes it unlawful to have or possess any liquor or property designed for the manufacture of liquor intended for use in violation of the act, or which has been so used, and provides that no property rights shall exist in any such liquor or property. The same section provides for the issue of search warrants, and if it be found that any liquor or property is unlawfully held or possessed, or has been unlawfully used, the liquor and all property designed for the unlawful manufacture of liquor shall be destroyed, unless the court otherwise orders. Section 29 provides that any person who manufactures or sells liquor in violation of Title II of the act shall for a first offense be fined not more than $1,000, or be imprisoned not exceeding six months, and for a second or subsequent offense shall be fined

not less than $200 nor more than $2,000 and be imprisoned for not less than one month nor more than five years.

In Title III elaborate provision is made for the production of alcohol in industrial alcohol plants. It provides for the taxation of such alcohol, and excepts industrial alcohol plants and bonded warehouses for the storage and distribution of industrial alcohol from certain sections of the Revised Statutes.

It is well settled that in cases of this character the construction or sufficiency of the indictment is not brought before us. *United States* v. *Keitel*, 211 U. S. 370; *United States* v. *Stevenson*, 215 U. S. 190. For the purpose of interpreting the statute we adopt the meaning placed upon the indictment by the court below. *United States* v. *Colgate & Co.*, 250 U. S. 300. As that court evidently construed the statutes upon the assumption that the charges had relation to intoxicating liquors intended for beverage purposes, we shall follow that view of the indictment in determining whether the former statutes are still in force.

Section 35 [1] (in the margin) in its first sentence repeals

[1] Sec. 35. All provisions of law that are inconsistent with this Act are repealed only to the extent of such inconsistency and the regulations herein provided for the manufacture or traffic in intoxicating liquor shall be construed as in addition to existing laws. This Act shall not relieve anyone from paying any taxes or other charges imposed upon the manufacture or traffic in such liquor. No liquor revenue stamps or tax receipts for any illegal manufacture or sale shall be issued in advance, but upon evidence of such illegal manufacture or sale a tax shall be assessed against, and collected from, the person responsible for such illegal manufacture or sale in double the amount now provided by law, with an additional penalty of $500 on retail dealers and $1,000 on manufacturers. The payment of such tax or penalty shall give no right to engage in the manufacture or sale of such liquor, or relieve anyone from criminal liability, nor shall this Act relieve any person from any liability, civil or criminal, heretofore or hereafter incurred under existing laws. The commissioner, with the approval

all prior acts to the extent of their inconsistency with the National Prohibition Act, to that extent and no more, and provides that no revenue stamps, or tax receipts, shall be issued in advance for the illegal manufacture or sale of intoxicating liquors, and that upon evidence of such illegal manufacture or sale the tax shall be assessed in double the amount now provided by law, with an additional penalty of $500 as to retail dealers and $1,000 as to manufacturers, and that the payment of such tax or penalty shall not give the right to engage in the manufacture or sale of such liquors, or relieve anyone from criminal liability.

That Congress may under the broad authority of the taxing power tax intoxicating liquors notwithstanding their production is prohibited and punished, we have no question. The fact that the statute in this aspect had a moral end in view as well as the raising of revenue, presents no valid constitutional objection to its enactment. *License Tax Cases*, 5 Wall. 462, 471; *In re Kollock*, 165 U. S. 526, 536; *United States* v. *Jin Fuey Moy*, 241 U. S. 394; *United States* v. *Doremus*, 249 U. S. 86. The question remains, concerning the applicability of § 3257, involving the right to punish for attempting to defraud the United States of a tax, Did Congress intend to punish such violation of law by imposing the old penalty denounced

---

of the Secretary of the Treasury, may compromise any civil cause arising under this title before bringing action in a court; and with the approval of the Attorney General he may compromise any such cause after action thereon has been commenced.

This section has given rise to different constructions in the federal courts; in some it has been held that the National Prohibition Act has repealed the old revenue laws. *United States* v. *Windham*, 264 Fed. Rep. 376; *United States* v. *Puhac*, 268 Fed. Rep. 392; *United States* v. *Stafoff*, 268 Fed. Rep. 417; *Reed* v. *Thurmond* (C. C. A. 4th Circuit), 269 Fed. Rep. 252. *Contra: United States* v. *Sohm*, 265 Fed. Rep. 910; *United States* v. *Turner*, 266 Fed. Rep. 248; *United States* v. *Farhat*, 269 Fed. Rep. 33.

in § 3257 or as provided in the new and special provision enacted in the Volstead Act?

It is the contention of the Government that § 35 saves the right to prosecute as to taxes, as well as the acts charged as violative of the other sections of the Revised Statutes, because of the phrase with which the section concludes: ". . . nor shall this act relieve any person from any liability, civil or criminal, heretofore or hereafter incurred under existing laws."

It is, of course, settled that repeals by implication are not favored. It is equally well settled that a later statute repeals former ones when clearly inconsistent with the earlier enactments. *United States* v. *Tynen*, 11 Wall. 88. In construing penal statutes, it is the rule that later enactments repeal former ones practically covering the same acts but fixing a lesser penalty. The concluding phrase of § 35 by itself considered is strongly indicative of an intention to retain the old laws. But this section must be interpreted in view of the constitutional provision contained in the Eighteenth Amendment and in view of the provisions of the Volstead Act intended to make that Amendment effective.

Having in mind these principles and considering now the first count of the indictment charging an attempt to defraud and actually defrauding the Government of the revenue tax, we do not believe that the general language used at the close of § 35 evidences the intention of Congress to inflict for such an offense the punishment provided in § 3257 with the resulting forfeiture, fine, and imprisonment, and at the same time to authorize prosecution and punishment under § 35 enacting lesser and special penalties for failing to pay such taxes by imposing a tax in double the amount provided by law, with an additional penalty of $500 on retailers and $1,000 on manufacturers. Moreover, the concluding words of the first paragraph of § 35, as to all the offenses charged, must

be read in the light of established legal principles governing interpretation of statutes, and in view of the provisions of the Volstead Act itself making it unlawful to possess intoxicating liquor for beverage purposes, or property designed for the manufacture of such liquor, and providing for their destruction. We agree with the court below that while Congress manifested an intention to tax liquors illegally as well as those legally produced, which was within its constitutional power, it did not intend to preserve the old penalties prescribed in § 3257 in addition to the specific provision for punishment made in the Volstead Act.

We have less difficulty with the other sections of the prior revenue legislation under which the charges, already set forth, are made. We think it was not intended to keep on foot the requirement as to displaying the words "Registered Distillery" in a place intended for the production of liquor for beverage purposes which could no longer be lawfully conducted; nor to require a bond for the control of such production; nor to penalize the making of mash in a distillery which could not be authorized by law.

The questions before us solely concern the construction of the statutes involved, under an indictment pertaining to the production of liquor for beverage purposes, and we think they were correctly answered in the opinion of the court below. It follows that its judgment is

Affirmed.

BURDEAU v. McDOWELL.

APPEAL FROM THE DISTRICT COURT OF THE UNITED STATES FOR THE WESTERN DISTRICT OF PENNSYLVANIA.

No. 646. Argued April 11, 12, 1921.—Decided June 1, 1921.

1. The United States may retain for use as evidence in the criminal prosecution of their owner, incriminating documents which are turned over to it by private individuals who procured them, without the participation or knowledge of any government official, through a wrongful search of the owner's private desk and papers in an office. P. 474.
2. The provision of the Fourth Amendment forbidding unreasonable searches and seizures refers to governmental action; the Fifth Amendment secures the citizen from compulsory testimony against himself by protecting him from extorted confessions and examinations in court proceedings by compulsory methods. P. 475.

Reversed.

APPEAL from an order of the District Court requiring that certain books and papers be impounded with the clerk and ultimately returned to the appellee, and enjoining officers of the Department of Justice from using them, or evidence derived through them, in criminal proceedings against him. The facts are stated in the opinion, *post*, 470.

The Solicitor General for appellant:

It was not shown that any book, paper, or other document which was the private property of appellee was delivered to or was ever in the possession of appellant.

It is difficult to see how it can be said, with any show of reason, that there was any stealing of books and papers in this case. Certainly there was no invasion of appellee's right of privacy. Everything that was taken into possession was found in the office of the company

itself, with the exception of a few papers which were in the private office of appellee, but which it is admitted related to the business of the company, and were, therefore, such papers as the company was entitled to have delivered to it. They were, in fact, delivered to its auditor by appellee's representative.

If the employee has left papers of his own commingled with those of the company, he certainly cannot be said to be the sole judge of whether a particular paper is his or belongs to the company. He has brought about a condition under which the company has the right to inspect everything in the office before allowing anything to be removed. The inspection, therefore, is entirely lawful, and any information of crime or other matters which may be thus acquired is lawfully acquired and may properly be used. In the present case, appellee's representative was allowed to be present and make a list or take copies of all papers examined. A paper furnishing evidence of crookedness in the conduct of the company's affairs certainly relates to a matter in which the company is interested; and if the unfaithful employee has left it in the company's files, or in the company's office, there is no principle of law under which he can lawfully claim the right to have it returned to him. He has parted with the private possession of it, and his surrender of possession has not been brought about by any invasion of his constitutional rights.

Even if it could be said that the company or its representatives stole these papers from the appellee, this would not preclude their use in evidence if they should thereafter come to the hands of the federal authorities. The court found, as the evidence clearly required, that no department of the Federal Government had anything whatever to do with the taking of these papers and that no federal official had any knowledge that an investigation of any kind was being made, nor did such knowledge

come to any federal official until several months later. It would scarcely be insisted by anyone that, if the Government should discover that someone has stolen from another a paper which shows that the latter has committed a crime, the thief could not be called as a witness to testify to what he has discovered. If the paper were still in his possession, he could be subpœnaed to attend and produce the paper. The same thing is accomplished when the Government, instead of issuing a subpœna duces tecum, takes the paper and holds it as evidence. The rightful owner, while it is being so held, is no more entitled to its return than one who has been arrested for carrying a pistol is entitled to have the pistol returned to him pending a trial.

It must always be remembered that "a party is privileged from producing the evidence but not from its production." *Johnson* v. *United States*, 228 U. S. 457, 458.

Moreover, the Fourth Amendment protects only against searches and seizures which are made under governmental authority, real or assumed, or under color of such authority. If papers have been seized, even though wrongfully, by one not acting under color of authority, and they afterwards come to the possession of the Government, they may be properly used in evidence. *Weeks* v. *United States*, 232 U. S. 383; *Gouled* v. *United States*, 255 U. S. 298; *Boyd* v. *United States*, 116 U. S. 616; *Adams* v. *New York*, 192 U. S. 585; *Johnson* v. *United States*, *supra*; *Perlman* v. *United States*, 247 U. S. 7.

Mr. E. Lowry Humes, with whom *Mr. A. M. Imbrie* and *Mr. Rody P. Marshall* were on the brief, for appellee:

The issue in this proceeding was the title and right of possession of certain private papers alleged to have been stolen. The right to private property can be as effectually asserted against the Government as it can against

an individual, and the Government has no greater right to stolen property than the private citizen. The receiver of stolen goods has no right superior to the right of the thief and the officer or agent of the Government who receives stolen goods is in no better position to retain the fruits and advantages of the crime than the humble private citizen. *Boyd* v. *United States*, 116 U. S. 616, 624; *Weeks* v. *United States*, 232 U. S. 383, 398. The right which the appellee asserted was a right which the court had jurisdiction to recognize and preserve.

The courts of the United States are open to the citizen for the enforcement of his legal and constitutional rights, and the right to private property may be asserted as a mere legal right or it may be asserted under the guarantees of the Constitution.

Abuses of individuals involving the deprivation of the right to the possession, use and enjoyment of private property are adequately redressed by the assertion of the legal rights of the individual in either courts of law or equity. The resort to the limitations of the Constitution may be necessary to curb the excesses of the Government.

In the case at bar there can be no question but that replevin would lie against both the thief and the receiver of the stolen goods to recover the private property of the appellee. But the legal remedy by replevin would have been inadequate as the injury could not be measured in damages. It was necessary to resort to the equitable powers of the court. The fact that the appellant happened to be an officer or employee of the Government provided no immunity to him that could prevent the owner of private property from asserting his legal rights in either a court of law or of equity. Quite to the contrary,—the very fact that he was an officer of the court, enlarged rather than diminished the authority of the court to exercise control over and deal with the stolen papers

which had come into his possession as such officer of the court.

In this case the proceeding is properly a much more summary proceeding than in a case against a stranger to the court where the formality and difficulty of securing jurisdiction over both the person and the property might be involved.

The right of a court of equity to order and decree the return of private property and papers is well recognized, as is illustrated by the following cases. *McGowin* v. *Remington*, 12 Pa. St. 56; *Dock* v. *Dock*, 180 Pa. St. 14; *Pressed Steel Car Co.* v. *Standard Steel Car Co.*, 210 Pa. St. 464.

This is an independent proceeding having for its purpose the recovery of property in equity. The law side of the court provided no adequate remedy. The court in adjudicating the case properly found that the papers had been stolen; that they were private and personal papers of the appellee, and that they were in the hands of an officer of the court, and that the owner was entitled to their return. Up to this point no constitutional question is involved. It is, however, respectfully submitted that had the court below refused under the evidence and the facts in this case to order the return of the books and papers, and dismissed the proceeding, and if subsequently a criminal proceeding had been instituted against the appellee and the stolen books and papers been admitted in evidence over objection, then appellee would have been denied the constitutional right guaranteed him under the Fifth Amendment to the Constitution in that he would have been "compelled in" a "criminal case to be a witness against himself." If this conclusion is not correct then a means has been found by which private prosecutors and complainants and those personally interested in the prosecution and persecution of alleged offenders can, by the mere ac-

quiescence of the Government, deprive citizens of the United States of the constitutional rights guaranteed to them by both the Fourth and Fifth Amendments.

MR. JUSTICE DAY delivered the opinion of the court.

J. C. McDowell, hereinafter called the petitioner, filed a petition in the United States District Court for the Western District of Pennsylvania asking for an order for the return to him of certain books, papers, memoranda, correspondence and other data in the possession of Joseph A. Burdeau, appellant herein, Special Assistant to the Attorney General of the United States.

In the petition it is stated that Burdeau and his associates intended to present to the grand jury in and for the Western District of Pennsylvania a charge against petitioner of an alleged violation of § 215 of the Criminal Code of the United States in the fraudulent use of the mails; that it was the intention of Burdeau and his associates, including certain post-office inspectors coöperating with him, to present to the grand jury certain private books, papers, memoranda, etc., which were the private property of the petitioner; that the papers had been in the possession and exclusive control of the petitioner in the Farmers Bank Building in Pittsburgh. It is alleged that during the spring and summer of 1920 these papers were unlawfully seized and stolen from petitioner by certain persons participating in and furthering the proposed investigation so to be made by the grand jury, under the direction and control of Burdeau as special assistant to the Attorney General, and that such books, papers, memoranda, etc., were being held in the possession and control of Burdeau and his assistants; that in the taking of the personal private books and papers the person who purloined and stole the same drilled the petitioner's private safes, broke the locks upon his private

desk, and broke into and abstracted from the files in his offices his private papers; that the possession of the books, papers, etc., by Burdeau and his assistants was unlawful and in violation of the legal and constitutional rights of the petitioner. It is charged that the presentation to the grand jury of the same, or any secondary or other evidence secured through or by them, would work a deprivation of petitioner's constitutional rights secured to him by the Fourth and Fifth Amendments to the Constitution of the United States.

An answer was filed claiming the right to hold and use the papers. A hearing was had before the District Judge, who made an order requiring the delivery of the papers to the clerk of the court, together with all copies memoranda and data taken therefrom, which the court found had been stolen from the offices of the petitioner at rooms numbered 1320 and 1321 in the Farmers Bank Building in the City of Pittsburgh. The order further provided that upon delivery of the books, papers, etc., to the clerk of the court the same should be sealed and impounded for the period of ten days, at the end of which period they should be delivered to the petitioner or his attorney unless an appeal were taken from the order of the court, in which event, the books, papers, etc., should be impounded until the determination of the appeal. An order was made restraining Burdeau, Special Assistant Attorney General, the Department of Justice, its officers and agents, and the United States Attorney from presenting to the United States Commissioner, the grand jury or any judicial tribunal, any of the books, papers, memoranda, letters, copies of letters, correspondence, etc., or any evidence of any nature whatsoever secured by or coming into their possession as a result of the knowledge obtained from the inspection of such books, papers, memoranda, etc.

In his opinion the District Judge stated that it was the

intention of the Department of Justice, through Burdeau and his assistants, to present the books, papers, etc., to the grand jury with a view to having the petitioner indicted for the alleged violation of § 215 of the Criminal Code of the United States, and the court held that the evidence offered by the petitioner showed that the papers had been stolen from him, and that he was entitled to the return of the same. In this connection the District Judge stated that it did not appear that Burdeau, or any official or agent of the United States, or any of the Departments, had anything to do with the search of the petitioner's safe, files and desk, or the abstraction therefrom of any of the writings referred to in the petition, and added that "the order made in this case is not made because of any unlawful act on the part of anybody representing the United States or any of its Departments but solely upon the ground that the Government should not use stolen property for any purpose after demand made for its return." Expressing his views, at the close of the testimony, the Judge said that there had been a gross violation of the Fourth and Fifth Amendments to the Federal Constitution; that the Government had not been a party to any illegal seizure; that those Amendments, in the understanding of the court, were passed for the benefit of the States against action by the United States, forbidden by those Amendments, and that the court was satisfied that the papers were illegally and wrongfully taken from the possession of the petitioner, and were then in the hands of the Government.

So far as is necessary for our consideration certain facts from the record may be stated. Henry L. Doherty & Company of New York were operating managers of the Cities Service Company, which company is a holding company, having control of various oil and gas companies. Petitioner was a director in the Cities Service Company

and a director in the Quapaw Gas Company, a subsidiary company, and occupied an office room in the building owned by the Farmers Bank of Pittsburgh. The rooms were leased by the Quapaw Gas Company. McDowell occupied one room for his private office. He was employed by Doherty & Company as the head of the natural gas division of the Cities Service Company. Doherty & Company discharged McDowell for alleged unlawful and fraudulent conduct in the course of the business. An officer of Doherty & Company and the Cities Service Company went to Pittsburgh in March, 1920, with authority of the president of the Quapaw Gas Company to take possession of the company's office. He took possession of room 1320; that room and the adjoining room had McDowell's name on the door. At various times papers were taken from the safe and desk in the rooms, and the rooms were placed in charge of detectives. A large quantity of papers were taken and shipped to the auditor of the Cities Service Company at 60 Wall Street, New York, which was the office of that company, Doherty & Company and the Quapaw Gas Company. The secretary of McDowell testified that room 1320 was his private office; that practically all the furniture in both rooms belonged to him; that there was a large safe belonging to the Farmers Bank and a small safe belonging to McDowell; that on March 23, 1920, a representative of the company and a detective came to the offices; that the detective was placed in charge of room 1320; that the large safe was opened with a view to selecting papers belonging to the company, and that the representative of the company took private papers of McDowell's also. While the rooms were in charge of detectives both safes were blown open. In the small safe nothing of consequence was found, but in the large safe papers belonging to McDowell were found. The desk was forced open, and all the papers taken from it.

The papers were placed in cases, and shipped to Doherty & Company, 60 Wall Street, New York.

In June, 1920, following, Doherty & Company, after communication with the Department of Justice, turned over a letter, found in McDowell's desk, to the Department's representative. Burdeau admitted at the hearing that as the representative of the United States in the Department of Justice he had papers which he assumed were taken from the office of McDowell. The communication to the Attorney General stated that McDowell had violated the laws of the United States in the use of the mail in the transmission of various letters to parties who owned the properties which were sold by or offered to the Cities Service Company; that some of such letters, or copies of them taken from McDowell's file, were in the possession of the Cities Service Company, that the Company also had in its possession portions of a diary of McDowell in which he had jotted down the commissions which he had received from a number of the transactions, and other data which, it is stated, would be useful in the investigation of the matter before the grand jury and subsequent prosecution should an indictment be returned.

We do not question the authority of the court to control the disposition of the papers, and come directly to the contention that the constitutional rights of the petitioner were violated by their seizure, and that having subsequently come into the possession of the prosecuting officers of the Government, he was entitled to their return. The Amendments involved are the Fourth and Fifth, protecting a citizen against unreasonable searches and seizures, and compulsory testimony against himself. An extended consideration of the origin and purposes of these Amendments would be superfluous in view of the fact that this court has had occasion to deal with those subjects in a series of cases. *Boyd* v. *United States*, 116 U. S. 616; *Adams* v. *New York*, 192 U. S. 585; *Weeks* v.

United States, 232 U. S. 383; *Johnson* v. *United States*, 228 U. S. 457; *Perlman* v. *United States*, 247 U. S. 7; *Silverthorne Lumber Co.* v. *United States*, 251 U. S. 385; and *Gouled* v. *United States*, 255 U. S. 298.

The Fourth Amendment gives protection against unlawful searches and seizures, and as shown in the previous cases, its protection applies to governmental action. Its origin and history clearly show that it was intended as a restraint upon the activities of sovereign authority, and was not intended to be a limitation upon other than governmental agencies; as against such authority it was the purpose of the Fourth Amendment to secure the citizen in the right of unmolested occupation of his dwelling and the possession of his property, subject to the right of seizure by process duly issued.

In the present case the record clearly shows that no official of the Federal Government had anything to do with the wrongful seizure of the petitioner's property, or any knowledge thereof until several months after the property had been taken from him and was in the possession of the Cities Service Company. It is manifest that there was no invasion of the security afforded by the Fourth Amendment against unreasonable search and seizure, as whatever wrong was done was the act of individuals in taking the property of another. A portion of the property so taken and held was turned over to the prosecuting officers of the Federal Government. We assume that petitioner has an unquestionable right of redress against those who illegally and wrongfully took his private property under the circumstances herein disclosed, but with such remedies we are not now concerned.

The Fifth Amendment, as its terms import is intended to secure the citizen from compulsory testimony against himself. It protects from extorted confessions, or examinations in court proceedings by compulsory methods.

The exact question to be decided here is: May the

Government retain incriminating papers, coming to it in the manner described, with a view to their use in a subsequent investigation by a grand jury where such papers will be part of the evidence against the accused, and may be used against him upon trial should an indictment be returned?

We know of no constitutional principle which requires the Government to surrender the papers under such circumstances. Had it learned that such incriminatory papers, tending to show a violation of federal law, were in the hands of a person other than the accused, it having had no part in wrongfully obtaining them, we know of no reason why a subpœna might not issue for the production of the papers as evidence. Such production would require no unreasonable search or seizure, nor would it amount to compelling the accused to testify against himself.

The papers having come into the possession of the Government without a violation of petitioner's rights by governmental authority, we see no reason why the fact that individuals, unconnected with the Government, may have wrongfully taken them, should prevent them from being held for use in prosecuting an offense where the documents are of an incriminatory character.

It follows that the District Court erred in making the order appealed from, and the same is

Reversed.

MR. JUSTICE BRANDEIS dissenting, with whom MR. JUSTICE HOLMES concurs.

Plaintiff's private papers were stolen. The thief, to further his own ends, delivered them to the law officer of the United States. He, knowing them to have been stolen, retains them for use against the plaintiff. Should the court permit him to do so?

That the court would restore the papers to plaintiff if they were still in the thief's possession is not questioned. That it has power to control the disposition of these stolen papers, although they have passed into the possession of the law officer, is also not questioned. But it is said that no provision of the Constitution requires their surrender and that the papers could have been subpœnaed. This may be true. Still I cannot believe that action of a public official is necessarily lawful, because it does not violate constitutional prohibitions and because the same result might have been attained by other and proper means. At the foundation of our civil liberty lies the principle which denies to government officials an exceptional position before the law and which subjects them to the same rules of conduct that are commands to the citizen. And in the development of our liberty insistence upon procedural regularity has been a large factor. Respect for law will not be advanced by resort, in its enforcement, to means which shock the common man's sense of decency and fair play.

McLAREN, ADMINISTRATOR OF McLAREN, v. FLEISCHER.

CERTIORARI TO THE SUPREME COURT OF THE STATE OF CALIFORNIA.

No. 291. Argued April 26, 27, 1921.—Decided June 1, 1921.

The Act of May 14, 1880, c. 89, 21 Stat. 140, provides that "where any person has contested, paid the land-office fees, and procured the cancellation of any preëmption, homestead, or timber-culture entry, he shall be notified by the register of the land-office of the district in which such land is situated of such cancellation, and

shall be allowed thirty days from date of such notice to enter said lands." *Held*, adopting the practical construction of the Land Department, that where an existing first-form withdrawal under the Reclamation Act prevented the land from becoming open to entry for more than thirty days after the notice of cancelation issued, a successful contestant of a homestead entry had thirty days after the tract was restored to public entry within which to exercise his preferred right. P. 480.

181 California, 607, affirmed.

THIS was a suit brought by McLaren to establish his equitable title to land patented to Fleischer, and to require Fleischer to convey. The state court of first instance dismissed the complaint, and the certiorari brings up a judgment of the state Supreme Court affirming that judgment. The facts are stated in the opinion.

Mr. Samuel Herrick, with whom *Mr. Henry M. Willis* was on the brief, for petitioner.

Mr. Patrick H. Loughran for respondent.

MR. JUSTICE VAN DEVANTER delivered the opinion of the court.

This case presents a controvery arising out of conflicting applications to enter a quarter section of land under the homestead law. While the land was public and unappropriated one Rider made a homestead entry of it, and later it was included, with other lands, in a first-form reclamation withdrawal.[1] The withdrawal did not extinguish Rider's entry, but while in force prevented the initiation of other claims. It was largely provisional and whenever in the judgment of the Secretary of the Interior any of the lands were not required for the purpose for which the withdrawal was made they were to be restored to public entry. While the withdrawal

[1] The withdrawal was made under the provision embodied in the first six lines of § 3 of the Act of June 17, 1902, c. 1093, 32 Stat. 388.

was in force one Fleischer instituted a contest against Rider's entry, at his own cost collected and presented evidence establishing its invalidity and procured its cancelation. Rider acquiesced in that decision and is not concerned in the present controversy. Fleischer had no claim to the land prior to the contest and in instituting and carrying it through acted as a common informer, which was admissible under the public land laws. To encourage the elimination of unlawful entries by such contests Congress had declared in the Act of May 14, 1880, c. 89, 21 Stat. 140:

"In all cases where any person has contested, paid the land-office fees, and procured the cancellation of any preëmption, homestead, or timber-culture entry, he shall be notified by the register of the land-office of the district in which such land is situated of such cancellation, and shall be allowed thirty days from date of such notice to enter said lands."

When Rider's entry was canceled the register sent to Fleischer a written notice informing him thereof and stating that he would be allowed thirty days after the tract was restored to public entry within which to enter it in the exercise of his preferred right as a successful contestant. The notice was dated February 11, 1909. Afterwards the Secretary of the Interior issued an order whereby the lands included in the withdrawal were restored to settlement on April 18, 1910, and to public entry on May 18 following. On the earlier date one McLaren made homestead settlement on this tract and on the later date both Fleischer and McLaren applied at the local land office to make homestead entry thereof,—Fleischer in the exercise of his preferred right and McLaren in virtue of his settlement. Fleischer's application was allowed and McLaren's rejected, the local officers being of opinion that Fleischer had the prior and better right. McLaren appealed and the action of the local

officers was sustained by the Commissioner of the General Land Office and by the Secretary of the Interior. In due course Fleischer received a patent for the land and McLaren then brought this suit to have Fleischer declared a trustee for him of the title and to compel a conveyance in execution of the trust. During the pendency of the suit McLaren died and it was revived in the name of his personal representative. Fleischer prevailed in the court of first instance and again in the Supreme Court of the State. 181 California, 607. A writ of certiorari brings the case here. 253 U. S. 479.

The sole question for decision is whether the officers of the land department erred in matter of law in holding that under the Act of May 14, 1880, Fleischer was entitled to thirty days after the land was restored to entry within which to exercise his preferred right of entry. The words of the act are, "shall be allowed thirty days from date of such notice to enter said lands." Generally, when an existing entry is canceled the land becomes at once open to entry and the act is easily applied. But where, as here, an existing withdrawal prevents the land from becoming open to entry for more than thirty days after the notice of cancelation issues, the application to be made of the act is not so obvious, and it becomes necessary to inquire what is intended. Does the act mean that the preferred right to enter the land is lost if not exercised within thirty days after the notice issues, even though the land is not open to entry during that period? Or does it mean that the contestant shall have thirty days during which the land is open to entry within which to exercise his preferred right, and therefore that if the land is not open to entry at the date of the notice the time during which that situation continues shall be eliminated in computing the thirty-day period? In the practical administration of the act the officers of the land department have adopted and given effect to

the latter view. They adopted it before the present controversy arose or was thought of, and, except for a departure soon reconsidered and corrected, they have adhered to and followed it ever since.[1] Many outstanding titles are based upon it and much can be said in support of it. If not the only reasonable construction of the act, it is at least an admissible one. It therefore comes within the rule that the practical construction given to an act of Congress, fairly susceptible of different constructions, by those charged with the duty of executing it is entitled to great respect and, if acted upon for a number of years, will not be disturbed except for cogent reasons.[2]

The case of *Edwards* v. *Bodkin*, 249 Fed. Rep. 562, and

---

[1] The instructions of June 6, 1905, 33 L. D. 667, contained the following:

"Seventh. When any entry for lands embraced within a withdrawal under the first form is canceled by reason of contest, or for any other reason, such lands become subject immediately to such withdrawal and can not, thereafter, so long as they remain so withdrawn, be entered or otherwise appropriated, either by a successful contestant or any other person; but any contestant who gains a preferred right to enter any such lands may exercise that right at any time within thirty days from notice that the lands involved have been released from such withdrawal and made subject to entry."

The regulations of May 18, 1916, § 29, 45 L. D. 385, 391, contained the following:

"Should the land embraced in the contested entry be within a first-form withdrawal at time of successful termination of the contest the preferred right may prove futile, for it can not be exercised as long as the land remains so withdrawn, but should the lands involved be restored to the public domain or a farm-unit plat be approved for the lands and announcement made that water is ready to be delivered, the preference right may be exercised at any time within 30 days from notice of the restoration or the establishment of farm units." And see *Wells* v. *Fisher*, 47 L. D. 288, for a statement and discussion of the departmental rulings.

[2] *Brown* v. *United States*, 113 U. S. 568, 571; *Webster* v. *Luther*, 163 U. S. 331, 342; *United States* v. *Hammers*, 221 U. S. 220, 228; *Logan* v. *Davis*, 233 U. S. 613, 627; *LaRoque* v. *United States*, 239 U. S. 62, 64.

265 Fed. Rep. 621, in which there was a decree of affirmance by this court, 255 U. S. 221, is cited as upholding a different view of the act. The opinions rendered by the Circuit Court of Appeals do indicate that it was disposed to think the words "thirty days from date of such notice" should be taken literally and strictly, but a careful reading of the opinions discloses that the decision was not put on that ground. As was rightly said by the Supreme Court of the State in the present case, "the decision there was not to the effect that the contestant was by mistake of law given the preference right." Indeed, that case did not call for any expression of opinion on the subject. The plaintiff there was the original homestead entryman and was insisting that his entry had been unlawfully canceled. If that claim was well taken, as was held, the cancelation did not give rise to any preferred right. Besides, the defendant there was not claiming under an entry based on a preferred right, but under entries made after he had relinquished the entry which he claimed was based thereon. Thus the observations of the Circuit Court of Appeals respecting preferred rights were *obiter dicta*, and, as the decree of affirmance in this court was put on other grounds, those observations are neither authoritative nor persuasive.

Here it is not questioned that the original or first entry—that of Rider—was lawfully canceled. McLaren recognized that that entry had been lawfully eliminated when he sought to initiate a claim to the land. He should also have recognized that Fleischer, by his contest, had brought about its elimination and was entitled, as a reward, to enter the land at any time within thirty days after it was restored to entry.

We conclude that the state courts rightly refused to disturb the construction which the officers of the land department had put on the act.

Judgment affirmed.

CULPEPPER v. OCHELTREE.

CERTIORARI TO THE SUPREME COURT OF THE STATE OF CALIFORNIA.

No. 292. Argued April 26, 27, 1921.—Decided June 1, 1921.

Decided upon the authority of *McLaren* v. *Fleischer*, *ante*, 477. 181 California, 788, affirmed.

THE case is stated in the opinion.

Mr. Samuel Herrick, with whom *Mr. Henry M. Willis* was on the brief, for petitioner.

Mr. Patrick H. Loughran for respondent.

MR. JUSTICE VAN DEVANTER delivered the opinion of the court.

This case is in all material respects like *McLaren* v. *Fleischer*, *ante*, 477. It was decided in the same way by the state courts and was argued with that case here. Therefore the opinion in that will suffice to dispose of this.

Judgment affirmed.

UNITED STATES *v.* BOWLING ET AL.

ERROR TO THE CIRCUIT COURT OF APPEALS FOR THE EIGHTH CIRCUIT.

No. 295. Argued April 27, 1921.—Decided June 1, 1921.

1. The power of the United States to ensure, by appropriate measures, that land allotted in severalty to a tribal Indian shall enure to the benefit of the allottee and his heirs while the title is restricted for their security, is no less where the allotment has been patented in fee but subject to a restriction on alienation, than where only a "trust patent" has issued and the fee remains with the United States in trust to be conveyed to the allottee or his heirs free of restriction at the end of the trust period. P. 486.
2. In either case, as an incident of the power, Congress may authorize and require the Secretary of the Interior to determine the heirs of a deceased allottee and may make his decision final and conclusive. P. 487.
3. The power of the Secretary of the Interior to determine the heirs of deceased allottees, if, as originally granted by § 1 of the Act of June 25, 1910, c. 431, 36 Stat. 855, it was intended to be confined to trust allotments, was extended to allotments in fee subject to restriction on alienation, by the Act of August 1, 1914, c. 222, 38 Stat. 582, the first of a series appropriating money to meet the cost of "determining the heirs of deceased Indian allottees having any right, title, or interest, in any trust *or restricted* allotment, under regulations prescribed by the Secretary of the Interior." So *held* in view of continuous executive practice antedating the first appropriation, whereby the heirs of allottees holding restricted fees were determined in numerous cases, communication thereof through official reports to Congress, and provisos declaring the appropriations inapplicable to specified tribes whose allotments are of the restricted fee class. P. 488.

261 Fed. Rep. 657, reversed.

THE case is stated in the opinion.

Mr. Leslie C. Garnett, Special Assistant to the Attorney General, for the United States.

Mr. Halbert H. McCluer, with whom *Mr. Vern E. Thompson* was on the brief, for defendants in error.

MR. JUSTICE VAN DEVANTER delivered the opinion of the court.

This was an action by the United States to recover the possession of a tract of land in Oklahoma, with damages for its detention and use by the defendants for several years. The trial resulted in a judgment for the defendants, which the Circuit Court of Appeals affirmed. 261 Fed. Rep. 657.

The land was allotted and patented under the Act of March 2, 1889, c. 422, 25 Stat. 1013, to Pe-te-lon-o-zah, or William Wea, a member of the confederated Wea, Peoria, Kaskaskia and Piankeshaw tribes of Indians, as his distributive share of the tribal lands. The patent was dated April 8, 1890, conveyed a fee simple title and imposed a restriction upon alienation for a period of twenty-five years from its date. Wea died intestate and seized of the land January 23, 1894. Shortly after his death persons claiming to be his heirs executed a conveyance of the land and on May 4, 1914, this court affirmed a decree against two of the present defendants canceling that conveyance as made in violation of the restriction. *Bowling* v. *United States*, 233 U. S. 528.

This action was commenced January 20, 1915, during the period of restriction, and, according to the petition, was brought in the interest of designated Indians who were alleged to be the heirs at law of Wea, to be entitled to the possession and to be members of the confederated tribes and still under the supervision and guardianship of the United States. The defendants, by their answer, admitted that the land had been allotted and patented to Wea and that they were in possession; denied all the other allegations in the petition, including the heirship

of those in whose interest the action was brought, and alleged that at the time of answering the defendants were rightfully in possession under conveyances executed by the real heirs after the restriction upon alienation expired.

At the trial the United States, to establish the heirship of those in whose interest the action was brought, offered in evidence an exemplified copy of a decision by the Secretary of the Interior, dated October 21, 1914, during the period of restriction, finding and holding that they were the heirs, and the sole heirs, of Wea, and stating their respective shares. To this the defendants objected upon the ground that the law of Congress under which the decision was given applied only where the deceased allottee held under a trust patent. The court sustained the objection and no other evidence on the subject was presented by either side. Whether the court erred in excluding the Secretary's determination is the only question reserved at the trial and now presented for decision. It was not claimed that the Secretary proceeded without notice or without according all who were interested a full hearing, but only that he had not been empowered to determine who were the heirs where the deceased allottee held, as did Wea, under a patent in fee, even though the land was subject to a restriction upon alienation.

Before coming to the acts under which the Secretary of the Interior proceeded, it will be helpful to refer to the modes, long in use, by which Indians are prevented from improvidently disposing of allotted lands. One is to issue to the allottee a written instrument or certificate, called a trust patent, declaring that the United States will hold the land for a designated period, usually twenty-five years, in trust for the sole use and benefit of the allottee, or, in case of his death, of his heirs, and at the expiration of that period will convey the same to him, or

his heirs, in fee, discharged of the trust and free of all charge or incumbrance. The other is to issue at once to the allottee a patent conveying to him the land in fee and imposing a restriction upon its alienation for twenty-five years or some other stated period. While alienation is effectually restricted by either mode, allotments under the first are commonly spoken of as trust allotments and those under the second as restricted allotments. As respects both classes of allotments—one as much as the other—the United States possesses a supervisory control over the land and may take appropriate measures to make sure that it inures to the sole use and benefit of the allottee and his heirs throughout the original or any extended period of restriction.[1] As an incident to this power Congress may authorize and require the Secretary of the Interior to determine the legal heirs of a deceased allottee and may make that determination final and conclusive.[2] It rests with Congress to say which of the two modes shall be followed in respect of the lands of a particular tribe, and this usually is done in the act directing that the lands be allotted. The Act of 1889, under which the lands of the confederated tribes were allotted, required that the second mode be followed—that of issuing a patent in fee imposing a restriction upon alienation for a fixed period.

By § 1 of the Act of June 25, 1910, c. 431, 36 Stat. 855, Congress provided: "That when any Indian to whom an allotment of land has been made, or may hereafter be made, dies before the expiration of the trust period and before the issuance of a fee simple patent, without having

---

[1] *United States* v. *Rickert*, 188 U. S. 432; *Tiger* v. *Western Investment Co.*, 221 U. S. 286; *Heckman* v. *United States*, 224 U. S. 413; *Brader* v. *James*, 246 U. S. 88; *Talley* v. *Burgess*, 246 U. S. 104; *La Motte* v. *United States*, 254 U. S. 570.

[2] *Hallowell* v. *Commons*, 239 U. S. 506. And see *Lane* v. *Mickadiet*, 241 U. S. 201; *Egan* v. *McDonald*, 246 U. S. 227.

made a will disposing of said allotment as hereinafter provided, the Secretary of the Interior, upon notice and hearing, under such rules as he may prescribe, shall ascertain the legal heirs of such decedent, and his decision thereon shall be final and conclusive."

The courts below concluded from the words of this provision that it was confined to trust allotments—those held under trust patents. Separately considered, it hardly admits of any other view; and yet other provisions in the same section suggest that its words may not have been happily chosen and that it may have been intended to be more comprehensive. To illustrate, a closely following proviso declares: "That the Secretary of the Interior is hereby authorized in his discretion to issue a certificate of competency, upon application therefor, to any Indian, or in case of his death, to his heirs, to whom a patent in fee containing restrictions on alienation has been or may hereafter be issued, and such certificate shall have the effect of removing the restrictions on alienation contained in such patent."

But we need not dwell upon the internal proof of what was intended, for by a series of appropriation acts, beginning August 1, 1914, and extending to the present time, Congress has treated and construed the provision as including both trust and restricted allotments.[1] Each of the appropriation acts contains a paragraph appropriating one hundred thousand dollars to meet the cost of "determining the heirs of deceased Indian allottees having any right, title, or interest, in any trust or restricted allotment, under regulations prescribed by the Secretary of the Interior," and they show affirmatively that they refer to a determination under § 1 of the Act of

[1] Acts August 1, 1914, c. 222, 38 Stat. 582, 586; May 18, 1916, c. 125, 39 Stat. 123, 127; March 2, 1917, c. 146, 39 Stat. 969, 972; May 25, 1918, c. 86, 40 Stat. 561, 567; June 30, 1919, c. 4, 41 Stat. 3, 8; February 14, 1920, c. 75, 41 Stat. 408, 413.

1910. Not only so, but they all contain a proviso that "this paragraph shall not apply to the Osage Indians, nor to the Five Civilized Tribes," which would be a needless provision if Congress had not intended that the power to determine heirships should extend to restricted as well as trust allotments; for the allotments to the Osages and to members of the Five Civilized Tribes were not trust but restricted allotments. The annual reports of the Indian Bureau [1] show that the officers of that bureau, including the Secretary of the Interior, have uniformly regarded § 1 of the Act of 1910, in connection with these appropriation acts, as enabling them to determine the heirs of both classes of deceased allottees, and they further show that in each year since these appropriations began these officers have determined the heirs of hundreds of deceased allottees who held under restricted as distinguished from trust allotments. In one year alone the number was 566 and of course the aggregate of the values involved was great. These reports were regularly laid before Congress and, with the knowledge thus obtained, it repeated the appropriation each year. Of course, this can be accounted for only upon the theory that in the opinion of Congress the officers were but exercising the power which it intended they should have and exercise. It was after the original provision had been so construed and supplemented by the first of the appropriation acts that Wea's heirs were determined by the Secretary. Apparently the appropriation acts and the reports of the Indian Bureau were not brought to the attention of the courts below.

We conclude that the District Court erred in sustain-

[1] House Doc. No. 90, p. 38, 64th Cong., 1st sess.; House Doc. No. 1899, p. 51, 64th Cong., 2d sess.; House Doc. No. 915, p. 53, 65th Cong., 2d sess.; House Doc. No. 1455, p. 53, 65th Cong., 3rd sess.; House Doc. No. 409, p. 51, 66th Cong., 2d sess.; House Doc. No. 849, p. 45, 66th Cong., 2d sess.

ing the defendants' objection to the introduction in evidence of the Secretary's determination, and therefore that the judgment must be reversed and the case remanded for a new trial.

Judgment reversed.

EX PARTE IN THE MATTER OF THE STATE OF NEW YORK ET AL., PETITIONERS.

ON PETITION FOR WRIT OF PROHIBITION AND/OR WRIT OF MANDAMUS.

No. 25, Original. Argued December 13, 14, 1920.—Decided June 1, 1921.

1. The power to issue a writ of prohibition to prevent a District Court from exceeding its jurisdiction in admiralty is conferred upon this court by Jud. Code, § 234, and may be exercised in a clear case even where an ultimate remedy exists by appeal. Pp. 496, 503.
2. Under the Eleventh Amendment, an admiralty suit *in personam* can not be brought against a State, without its consent, by an individual, whether a citizen of the State or not. P. 497.
3. Whether a suit in admiralty is a suit against a State is determined, not by the names of the titular parties, but by the essential nature and effect of the proceeding as it appears from the entire record. P. 500.
4. In suits *in rem* against privately owned steam tugs for injuries inflicted on libelants' barges, the tug-owners, appearing as claimants, sought to implead the Superintendent of Public Works of the State of New York, alleging that the damages complained of were occasioned while the tugs were under charter to him officially and under his operation, control and management, pursuant to the state law, and praying that as such official he be cited into the suits to answer for the damages and, if not found, that the goods and chattels of the State used and controlled by him be attached. Monitions, issued accordingly, were served on him in the district. *Held*, that these proceedings against the Superintendent were *in personam*, and, considering his functions under the state laws and the ultimate

incidence of the relief sought, were essentially proceedings against the State, beyond the jurisdiction of the District Court in admiralty. P. 501. *Workman* v. *New York City*, 179 U. S. 552, distinguished. Rule absolute for a writ of prohibition.

PROHIBITION, to restrain proceedings in admiralty in the District Court. The case is stated in the opinion, *post*, 494.

Mr. Edward G. Griffin, with whom *Mr. Charles D. Newton*, Attorney General of the State of New York, and *Mr. George A. King*, were on the brief, for petitioners.

Mr. Ellis H. Gidley for respondent:

This court has not granted writs of prohibition when petitioner possessed another remedy. *In re Cooper*, 143 U. S. 472; *Ex parte Gordon*, 104 U. S. 515; *In re New York & Porto Rico S. S. Co.*, 155 U. S. 523, 531.

The District Court, having general jurisdiction over the subject-matter and over the parties, should be allowed to proceed to decision upon the merits, and if error has been or shall be committed in entertaining the claimants' contention against the charterer in the same suit with the libel against the ship, it may be later corrected on appeal. See *In re Fassett*, 142 U. S. 479, 484; *Moran* v. *Sturges*, 154 U. S. 256, 286; *Ex parte Detroit River Ferry Co.*, 104 U. S. 519; *Ex parte Hagar*, 104 U. S. 520; *In re Rice*, 155 U. S. 396; *In re Huguley Manufacturing Co.*, 184 U. S. 297; *Alexander* v. *Crollott*, 199 U. S. 580; *Ex parte Oklahoma*, 220 U. S. 191, 208, 209.

The Superintendent of Public Works is subject to the exercise of admiralty jurisdiction. The District Court unquestionably has control of the *res*, as both tugs were within the territorial jurisdiction when arrested. They were subject to maritime liens in favor of the libelants. Likewise the Superintendent was within the territorial jurisdiction when its process, issued conformably to Rule 59, was served personally upon him. Moreover, it was

alleged in the petitions filed by claimants that the Superintendent had and maintained various property under his control and direction within the district. Therefore, the only question is, whether, having such control of the subject-matter, vessels and parties by due and proper exercise of its admiralty process, the District Court might also exercise its admiralty jurisdiction against the Superintendent.

The application of the provisions of Rule 59 to these causes does not change their admiralty characteristics and does not deprive the District Court of jurisdiction. The proceedings became pure actions *in rem*, *sui generis*, distinctly maritime in nature, and we submit that the contrary assertion is neither based on fact nor supported by law.

The Attorney General argues that inasmuch as the *res* are not now under charter to, or in the possession of, the State, there is no basis in such a claim *in personam* against the State. It should be sufficient reply to say that such argument neglects not only the creation by disaster of a *jus in re* enforceable in admiralty by process *in rem*, *The John G. Stevens*, 170 U. S. 113, 117, and cases cited; but likewise takes no thought of the liability of the charterer to return the vessel to the owner free from lien. *The Barnstable*, 181 U. S. 464.

These are not, under any consideration, actions at law or in equity falling within the purview of the Eleventh Amendment. Admiralty suits are neither suits at law nor in equity, but are spoken of in contradistinction to both. 3 Story, Constitution, § 1683, original ed. Admiralty actions are *sui generis*, and are not within the term civil suits, thereby meaning suits of a civil nature at common law or in equity. *United States* v. *Bright*, Fed. Cas. No. 14,647; *Atkins* v. *Disintegrating Co.*, 18 Wall. 272.

The prerequisite in admiralty to the right to resort to a libel *in personam* is the existence of a cause of action,

maritime in its nature. *Workman* v. *New York City*, 179 U. S. 552, 573. Further, a libel *in personam* may be maintained for any cause within the jurisdiction of an admiralty court, wherever a monition can be served upon the libelee or an attachment made of any personal property or credits of his. *In re Louisville Underwriters*, 134 U. S. 488, 490. *Governor of Georgia* v. *Madrazo*, 1 Pet. 110, and *Ex parte Madrazzo*, 7 Pet. 627, distinguished.

The doctrine laid down by this court in the case of *Workman* v. *New York City*, *supra*, is wholly decisive of the issue here, for no distinction in the applicability of the rule there laid down was made between corporations, municipal or sovereign; the National Government alone was excepted therefrom.

These are not suits against the State; and, in any event, the question whether they are belongs to the merits rather than to the jurisdiction. *Scully* v. *Bird*, 209 U. S. 481; *Illinois Central R. R. Co.* v. *Adams*, 180 U. S. 28.

The cases in which immunity from process has been heretofore claimed and granted on the ground of sovereignty have no application. They were either—(1) actions brought directly against vessels owned or maintained as the property of a sovereign power and at the time of action possessed by it or maintained under its control, or (2) against vessels in the possession of the National Government or vessels of a friendly foreign sovereign. The principle of immunity to vessels in the possession of the National Government was first declared in *The Siren*, 7 Wall. 152, and again in *The Davis*, 10 Wall. 15. Both of those cases nevertheless held that the liens in question were capable of enforcement therein because the possession of the Government was not disturbed in so doing. See *Workman* v. *New York City*, 179 U. S. 552, 573.

The granting of immunity from process to vessels of a friendly foreign sovereign power apparently has its basis in the decision of *The Exchange*, 7 Cranch, 116, in which it was

held that a public armed vessel in the service of a sovereign at peace with the United States is not within the ordinary jurisdiction of the admiralty court, such privilege being based upon international courtesy. See *The Maipo*, 252 Fed. Rep. 627; *The Roseric*, 254 Fed. Rep. 154; *The Pampa*, 245 Fed. Rep. 137.

Nowhere is it suggested that the courtesy accorded vessels of the National Government or of a friendly foreign power can be extended to include one of the several States of the United States. If it should be thought that such doctrine should be so extended, it would still be inapplicable here, where no possession of the *res* by the State or by a state officer could be disturbed by these proceedings *in rem;* and the vessels were not, at the time of seizure, owned, maintained or possessed by the State. Moreover, a further decisive objection lies in the absence of complete sovereignty in the State of New York. Sovereignty in its essence means supreme political authority.

The State of New York may not impose its local law upon the admiralty jurisdiction. *Workman* v. *New York City*, 179 U. S. 552, 557; *Southern Pacific Co.* v. *Jensen*, 244 U. S. 205, 215, 216; *The Lottawanna*, 21 Wall. 558. See also *Union Fish Co.* v. *Erickson*, 248 U. S. 308.

As between the owners and the charterer, liability for damage caused by negligence of the officers and crew under the dominion of the charterer rests with the charterer.

The State must be presumed to have contemplated the system of maritime law under which the charters were made.

Justice commends the unlimited application of the provisions of Admiralty Rule 59.

MR. JUSTICE PITNEY delivered the opinion of the court.

Three separate libels *in rem* were filed in the United States District Court for the Western District of New

York: two against the Steam Tug *Charlotte*, her engines, boilers, machinery, etc., by one Dolloff and one Wagner respectively, both residents and presumably citizens of the State of New York, to severally recover for damages alleged to have been caused to certain canal boats owned by them while navigated upon the Erie Canal in tow of the *Charlotte;* the other against the Steam Tug *Henry Koerber, Jr.*, her boilers, engines, tackle, etc., by Murray Transportation Company, a corporation of the State of New York, bailee of a certain coal barge, to recover damages alleged to have been received by the barge while navigated upon the Erie Canal in tow of the *Koerber*. In each case the tug was claimed by Frank F. Fix and Charles Fix, partners in business under the name of Fix Brothers, of Buffalo, New York, and released from arrest on the filing of satisfactory stipulations. Claimants filed answers to the several libels, and at the same time filed petitions under Admiralty Rule 59 (new Rule 56), setting up in each case that at the time of the respective disasters and damage complained of the tugs were under charter by claimants to Edward S. Walsh, Superintendent of Public Works of the State of New York, who had entered into such charter parties under authority reposed in him by an act of the Legislature of the State of New York, being c. 264 of the Laws of 1919, and had the tugs under his operation, control, and management; that if decrees should be ordered in the respective causes against the tugs the claimants, because of their ownership of the vessels, would be called upon for payment, and thus would be mulcted in damages for the disasters, to which they were total strangers; and that by reason of these facts Edward S. Walsh, Superintendent of Public Works of the State of New York, ought to be proceeded against in the same suits for such damages in accordance with the rule. The District Court, pursuant to the prayer of these petitions, caused monitions to be issued in all

three cases against Edward S. Walsh, Superintendent of Public Works, citing him to appear and answer, and, in case he could not be found, that "the goods and chattels of the State of New York used and controlled by him" should be attached. The monitions were served upon Walsh within the jurisdiction of the court.

The Attorney General of the State appeared in all three cases specially in behalf of the State and the People thereof, and of Walsh, and filed a suggestion that the court was without jurisdiction to proceed against Walsh as Superintendent of Public Works for the reason that, as appeared upon the face of the proceedings, they were suits against the State of New York in which the State had not consented to be sued. The District Court denied motions to dismiss the monitions (*The Henry Koerber, Jr.*, 268 Fed. Rep. 561), whereupon the Attorney General, on behalf of the State and the People thereof, and of Walsh as Superintendent and individually, under leave granted, filed in this court a petition for writs of prohibition and mandamus. An order to show cause was issued, to which the District Judge made a return, and upon this and the proceedings in the District Court the matter has been argued.

The record shows that the charters had expired according to their terms, and the tugs were in possession of the claimants, neither the State nor Walsh having any claim upon or interest in them. At no time has any *res* belonging to the State or to Walsh, or in which they claim any interest, been attached or brought under the jurisdiction of the District Court. Nor is any relief asked against Mr. Walsh individually; the proceedings against him being strictly in his capacity as a public officer.

The power to issue writs of prohibition to the district courts when proceeding as courts of admiralty and maritime jurisdiction is specifically conferred upon this court by § 234, Judicial Code (Act of March 3, 1911, c. 231, 36

Stat. 1087, 1156). And the fact that the objection to the jurisdiction of the court below might be raised by an appeal from the final decree is not in all cases a valid objection to the issuance of a prohibition at the outset, where a court of admiralty assumes to take cognizance of matters over which it has no lawful jurisdiction. *In re Cooper*, 143 U. S. 472, 495.

That a State may not be sued without its consent is a fundamental rule of jurisprudence having so important a bearing upon the construction of the Constitution of the United States that it has become established by repeated decisions of this court that the entire judicial power granted by the Constitution does not embrace authority to entertain a suit brought by private parties against a State without consent given: not one brought by citizens of another State, or by citizens or subjects of a foreign State, because of the Eleventh Amendment; and not even one brought by its own citizens, because of the fundamental rule of which the Amendment is but an exemplification. *Beers* v. *Arkansas*, 20 How. 527, 529; *Railroad Co.* v. *Tennessee*, 101 U. S. 337, 339; *Hans* v. *Louisiana*, 134 U. S. 1, 10–17; *North Carolina* v. *Temple*, 134 U. S. 22, 30; *Fitts* v. *McGhee*, 172 U. S. 516, 524; *Palmer* v. *Ohio*, 248 U. S. 32, 34; *Duhne* v. *New Jersey*, 251 U. S. 311, 313.

Nor is the admiralty and maritime jurisdiction exempt from the operation of the rule. It is true the Amendment speaks only of suits in law or equity; but this is because, as was pointed out in *Hans* v. *Louisiana*, *supra*, the Amendment was the outcome of a purpose to set aside the effect of the decision of this court in *Chisholm* v. *Georgia*, 2 Dall. 419, which happened to be a suit at law brought against the State by a citizen of another State, the decision turning upon the construction of that clause of § 2 of Art. III of the Constitution establishing the judicial power in cases in law and equity between a State

and citizens of another State; from which it naturally came to pass that the language of the Amendment was particularly phrased so as to reverse the construction adopted in that case. In *Hans* v. *Louisiana, supra* (p. 15), the court demonstrated the impropriety of construing the Amendment so as to leave it open for citizens to sue their own State in the federal courts; and it seems to us equally clear that it cannot with propriety be construed to leave open a suit against a State in the admiralty jurisdiction by individuals, whether its own citizens or not.

Among the authorities to which we are referred is Mr. Justice Story, who, in his commentaries on the Constitution (1st ed., § 1683; 5th ed., § 1689), stated that it had been doubted whether the Amendment extended to cases of admiralty and maritime jurisdiction where the proceeding was *in rem* and not *in personam;* and whose doubt was supported by a declaration proceeding from Mr. Justice Washington at the circuit, *United States* v. *Bright* (1809), Brightly, N. P. 19, 25, Note; 24 Fed. Cas. 1232, 1236, No. 14,647; 3 Hall's L. J. 197, 225. But the doubt was based upon considerations that were set aside in the reasoning adopted by this court in *Hans* v. *Louisiana.* In *Governor of Georgia* v. *Madrazo,* 1 Pet. 110, 124, the question whether the Eleventh Amendment extended to proceedings in admiralty was alluded to, but found unnecessary to be decided, because, if it did not, the case was for the original jurisdiction of this court and not of the district court in which it was brought; and it was held, further, that the decree could not be sustained as a proceeding *in rem,* because the thing was not in possession of the district court. Subsequently, in *Ex parte Madrazo,* 7 Pet. 627, 632, an application was made to this court to entertain a suit in admiralty against the State of Georgia, and it was held that as there was no property in the custody of the court of admiralty, or brought within its jurisdiction and in the possession of any private person,

the case was not one for the exercise of the admiralty jurisdiction; and that, being a mere personal suit against a State to recover proceeds in its possession, it could not be entertained, since "no private person has a right to commence an original suit in this court against a State." *Atkins* v. *Disintegrating Co.*, 18 Wall. 272, 300, *et seq.*, and *In re Louisville Underwriters*, 134 U. S. 488, are aside from the point, since they relate merely to a question of statutory construction: whether the provision of § 11 of the Judiciary Act of 1789 (1 Stat. 79, c. 20; reënacted in § 739 of the Revised Statutes, and in § 1 of Act of March 3, 1875, c. 137, 18 Stat. 470), to the effect that no civil suit should be brought against a person by original process in any district other than that of which he was an inhabitant or in which he should be found, applied to suits *in personam* in admiralty so as to prevent the court from acquiring jurisdiction over a corporation through attachment of its goods or property in a district other than that of its residence (in the former case), or by service of process upon its appointed agent (in the latter).

Much reliance is placed upon *Workman* v. *New York City*, 179 U. S. 552. But that dealt with a question of the substantive law of admiralty, not the power to exercise jurisdiction over the person of defendant; and in the opinion the court was careful to distinguish between the immunity from jurisdiction attributable to a sovereign upon grounds of policy, and immunity from liability in a particular case. Thus (p. 566): "The contention is, although the corporation *had general capacity to stand in judgment*, and was therefore *subject to the process* of a court of admiralty, nevertheless the admiralty court would afford no redress against the city for the tort complained of, because under the local law," etc. "But the maritime law affords no justification for this contention, and no example is found in such law, where one who is *subject to suit and amenable to process* is allowed to escape liability

for the commission of a maritime tort, upon the theory relied upon."

We repeat, the immunity of a State from suit *in personam* in the admiralty brought by a private person without its consent, is clear.

As to what is to be deemed a suit against a State, the early suggestion that the inhibition might be confined to those in which the State was a party to the record (*Osborn* v. *United States Bank*, 9 Wheat. 738, 846, 850, 857) has long since been abandoned, and it is now established that the question is to be determined not by the mere names of the titular parties but by the essential nature and effect of the proceeding, as it appears from the entire record. *Louisiana* v. *Jumel*, 107 U. S. 711, 719, 720, 723, 727–728; *Hagood* v. *Southern*, 117 U. S. 52, 67, *et seq.; In re Ayers*, 123 U. S. 443, 487–492; *Pennoyer* v. *McConnaughy*, 140 U. S. 1, 10, *et seq.; Smith* v. *Reeves*, 178 U. S. 436, 438–440; *Murray* v. *Wilson Distilling Co.*, 213 U. S. 151, 168–170; *Lankford* v. *Platte Iron Works Co.*, 235 U. S. 461, 469.

Thus examined, the decided cases have fallen into two principal classes, mentioned in *Pennoyer* v. *McConnaughy*, 140 U. S. 1, 10: "The first class is where the suit is brought against the officers of the State, as representing the State's action and liability, thus making it, though not a party to the record, the real party against which the judgment will so operate as to compel it to specifically perform its contracts [citing cases]. The other class is where a suit is brought against defendants who, claiming to act as officers of the State, and under the color of an unconstitutional statute, commit acts of wrong and injury to the rights and property of the plaintiff acquired under a contract with the State. Such suit . . . is not, within the meaning of the Eleventh Amendment, an action against the State." The first class, in just reason, is not confined to cases where the suit will operate so as to com-

pel the State specifically to perform its contracts, but extends to such as will require it to make pecuniary satisfaction for any liability. *Smith* v. *Reeves*, 178 U. S. 436, 439.

As has been shown, the proceedings against which prohibition is here asked have no element of a proceeding *in rem*, and are in the nature of an action *in personam* against Mr. Walsh, not individually, but in his capacity as Superintendent of Public Works of the State of New York. The office is established and its duties prescribed by the constitution of the State; Art. 5, § 3. He is "charged with the execution of all laws relating to the repair and navigation of the canals, and also of those relating to the construction and improvement of the canals," with exceptions not material. By c. 264 of the Laws of 1919, effective May 3, the Superintendent is authorized to provide such facilities as in his judgment may be necessary for the towing of boats on the canals of the State, the towing service to be furnished under such rules and regulations as he shall adopt; and for that service he is authorized to impose and collect such fees as in his judgment may seem fair and reasonable; the moneys so collected to be deposited by him in the state treasury. For the carrying into effect of this act the sum of $200,000 was appropriated. Under these provisions of law Mr. Walsh, as Superintendent of Public Works, chartered the tugs *Henry Koerber, Jr.*, and *Charlotte*, in the name and behalf of the People of the State of New York, for periods beginning May 15 and ending at latest December 15, 1919; and it was under these charters that they were being operated when the disasters occurred upon which the libels are founded and the petitions under Rule 59 are based. The decrees sought would affect Mr. Walsh in his official capacity, and not otherwise. They might be satisfied out of any property of the State of New York in his hands as Superintendent of Public Works, or made a basis for charges upon the treasury of the State under

§ 46 of the Canal Law (Cons. L. 1909, p. 269), which provides that the commissioners of the canal fund may allow claims for moneys paid by the Superintendent of Public Works or other person or officer employed in the care, management, superintendence, and repair of the canals, for a judgment recovered against them or any of them in any action instituted for an act done pursuant to the provisions of the canal law. In either case their effect, whether complete or not, would expend itself upon the People of the State of New York in their public and corporate capacity. Section 47 of the Canal Law provides for an action before the Court of Claims for certain kinds of damages arising from the use or management of the canals; but in terms it is provided that this "shall not extend to claims arising from damages resulting from the navigation of the canals." There is no suggestion that the Superintendent was or is acting under color of an unconstitutional law, or otherwise than in the due course of his duty under the constitution and laws of the State of New York. In the fullest sense, therefore, the proceedings are shown by the entire record to be in their nature and effect suits brought by individuals against the State of New York, and therefore—since no consent has been given—beyond the jurisdiction of the courts of the United States.

There is no substance in the contention that this result enables the State of New York to impose its local law upon the admiralty jurisdiction, to the detriment of the characteristic symmetry and uniformity of the rules of maritime law insisted upon in *Workman* v. *New York City*, 179 U. S. 552, 557–560; *Southern Pacific Co.* v. *Jensen*, 244 U. S. 205, 215; *Union Fish Co.* v. *Erickson*, 248 U. S. 308, 313; *Knickerbocker Ice Co.* v. *Stewart*, 253 U. S. 149, 160. The symmetry and harmony maintained in those cases consists in the uniform operation and effect of the characteristic principles and rules of the maritime law

as a body of substantive law operative alike upon all who are subject to the jurisdiction of the admiralty, and binding upon other courts as well. *Chelentis* v. *Luckenbach S. S. Co.*, 247 U. S. 372, 382, 384. It is not inconsistent in principle to accord to the States, which enjoy the prerogatives of sovereignty to the extent of being exempt from litigation at the suit of individuals in all other judicial tribunals, a like exemption in the courts of admiralty and maritime jurisdiction.

The want of authority in the District Court to entertain these proceedings *in personam* under Rule 59 (now 56) brought by the claimants against Mr. Walsh as Superintendent of Public Works of the State of New York is so clear, and the fact that the proceedings are in essence suits against the State without its consent is so evident, that instead of permitting them to run their slow course to final decree, with inevitably futile result, the writ of prohibition should be issued as prayed. *Ex parte Simons*, 247 U. S. 231, 239; *Ex parte Peterson*, 253 U. S. 300, 305.

Rule absolute for a writ of prohibition.

EX PARTE IN THE MATTER OF THE STATE OF NEW YORK ET AL., OWNERS OF THE STEAM TUG QUEEN CITY, PETITIONERS.

ON PETITION FOR WRIT OF PROHIBITION AND/OR WRIT OF MANDAMUS.

No. 26, Original. Argued December 14, 1920.—Decided June 1, 1921.

1. The facts that a vessel, libeled in the District Court, is the property of a State, in its possession and control and employed in its public governmental service, may be established, *prima facie*, at least, by

a suggestion verified and filed by the attorney general of the State, in his official capacity, in connection with his special appearance and objection to the jurisdiction. P. 509. *Ex parte Muir*, 254 U. S. 522, distinguished.

2. Under the admiralty law, a vessel owned and possessed by a State and employed exclusively for its governmental purposes, is exempt from seizure in a suit to recover damages for a death caused by her negligent operation. P. 510.

Rule absolute for writ of prohibition.

PROHIBITION to restrain proceedings in admiralty in the District Court. The case is stated in the opinion, *post*, 508.

Mr. Edward G. Griffin, with whom *Mr. Charles D. Newton*, Attorney General of the State of New York, and *Mr. George A. King*, were on the brief, for petitioners.

Mr. Irving W. Cole, with whom *Mr. Thomas P. Haley* was on the brief, for respondents:

There can be no question but that originally the District Court had jurisdiction, under the facts set forth in the libel. It is not claimed otherwise, but only that something has been since extraneously suggested which ousts such jurisdiction—the ownership of the *res* by the State. It is, therefore, not a question of jurisdiction, but whether, in such a situation, the powers of a court, originally having jurisdiction, and the jurisdiction itself, are destroyed, or still exist and should be continued over the subject-matter to judgment.

The objections to such continuance now interposed by the State, we say, should properly be interposed according to the requirements of proceedings and practice in admiralty courts, by appearing and claiming ownership and excepting or answering to the libel, setting forth the grounds. Then a plea based on the sovereign attributes of the State could be heard, and, if overruled, appeal

could be taken as a matter of right to the Circuit Court of Appeals and from there to this court. *The Steamship Jefferson*, 215 U. S. 130; *The Ira M. Hedges*, 218 U. S. 264; *Illinois Central R. R. Co.* v. *Adams*, 180 U. S. 28; *South Carolina* v. *Wesley*, 155 U. S. 542.

This suit in its present form is purely *in rem*. A question may arise whether such a suit, when not *in personam*, can be maintained under the New York Death Statutes (§§ 1902, 1903, 1904, 1905, New York Code Civil Procedure). This, however, is not a ground for prohibition, *Ex parte Gordon*, 104 U. S. 515; nor is any such ground urged here.

If, however, the owner of the vessel or any claimant shall appear and proceed by claim, and exception or answer, according to the usual practice in admiralty, libelants will be formally advised as to who the person, or corporation, or State is that may be liable *in personam*. Having become so informed libelants may procure the libel to be amended, making such person, corporation, or State, as well as the vessel, a party, and will then have the advantage of a suit *in personam* as well as *in rem* to meet any objection to the suit raised by exception or defense, and have a chance to litigate it. For instance, the master or captain sailing the vessel at the time or the superintendent of the canals having charge of the vessel and who authorized its use at the time, might either or both be personally liable. The State itself, if it owns the boat and was operating it as a master of servants in immediate charge of it, might be claimed to be privy to the negligence or wrong and liable *in personam*, at least in a suit in admiralty. Canal Law, § 47; Code Civ. Proc., § 264.

The question might arise as to whether the State has waived its immunity from liability to libelants, if that be necessary to recovery. The State owns and operates the canals for commercial purposes. It has waived

its immunity from liability for damages caused in such operation, to a large extent at least, by § 47 of the State Canal Law. Has the State waived its immunity from liability to libelants for the damages they have suffered as alleged? Is the State while operating a vessel on its canals for commercial purposes for pay, through officers and employees, engaged thereby in such governmental functions as will prevent a court of admiralty from exercising powers exclusively lodged in it?

All these questions may become important, as under *Workman* v. *New York City*, 179 U. S. 552, where they were litigated in the regular and proper way on the merits and not by writ of prohibition.

It is well established that the writ of prohibition lies only where the District Court clearly had no jurisdiction of the case originally and where the relator has no other remedy.

Where a district court has jurisdiction the writ does not lie to restrain it from proceeding to exercise such jurisdiction, *Morrison* v. *District Court*, 147 U. S. 14; but will issue only in case of want of jurisdiction either of the parties or the subject-matter of the proceeding and cannot be used as a substitute for exception to a libel for insufficiency. *In re Fassett*, 142 U. S. 479. It will not issue to restrain the court from proceeding in a libel case against a vessel for damages for drowning a person in a collision. *Ex parte Gordon*, 104 U. S. 515; *Ex parte Detroit River Ferry Co.*, 104 U. S. 519. It cannot be used to correct errors of a court in deciding matters of law or fact within its jurisdiction, *Smith* v. *Whitney*, 116 U. S. 167; and will be issued only on the record in the suit. *Ex parte Easton*, 95 U. S. 68. The record of the suit shows jurisdiction perfect.

We say, therefore, that this is not a case for prohibition, but the grounds urged for the prohibition should be disposed of when raised in the regular and usual manner

on the merits of the case. *Scully* v. *Bird*, 209 U. S. 481.

The body of admiralty law and the federal judicial power in admiralty and maritime jurisdiction are paramount and exclusive over and against everything except the sovereignty of the Federal Government itself, and foreign sovereignties having treaty rights. They recognize but one sovereignty in the United States, that of the Federal Government. Nor can there be but one sovereign power over the same thing at the same time. As to this body of law and these judicial powers, the States have surrendered both their sovereign powers and sovereign privileges under the Constitution. The State can have or enact no law contravening or affecting them. Nor can it urge its sovereign attributes to accomplish the same results. To hold otherwise would be a contradiction. *Workman* v. *New York City*, 179 U. S. 552; *The Lake Monroe*, 250 U. S. 246; *Knickerbocker Ice Co.* v. *Stewart*, 253 U. S. 149; *Southern Pacific Co.* v. *Jensen*, 244 U. S. 205; *Union Fish Co.* v. *Erickson*, 248 U. S. 308.

It is immaterial to whom the vessel proceeded against in admiralty belongs. *Clark* v. *New Jersey Steam Navigation Co.*, Fed. Cas. No. 2,859; *The John G. Stevens*, 170 U. S. 113; *The Siren*, 7 Wall. 152.

The question as to the limits of maritime law and admiralty jurisdiction is exclusively a judicial question. *The Lottawanna*, 21 Wall. 558; *Ex parte Easton*, 95 U. S. 68.

The jurisdiction depends not on the character of the parties but on the subject-matter. *The Jerusalem*, Fed. Case. No. 7,293; *De Lovic* v. *Boit*, Fed. Cas. No. 3,776; *Clark* v. *New Jersey Steam Navigation Co.*, *supra*.

The use of the words "admiralty" and "maritime" in the Constitution relates simply to subject-matter and embraces all cases arising under the general maritime law. *Waring* v. *Clarke*, 5 How. 441, 473.

The vessel in question being, and having committed the

marine tort, in maritime waters was under the exclusive sovereignty of the United States and within the exclusive federal judicial power. The State cannot, by reason of its sovereignty as to other matters and things, oust or limit either the federal sovereignty or the jurisdiction and powers of the federal courts over the *res*, the vessel.

MR. JUSTICE PITNEY delivered the opinion of the court.

In October, 1920, Martin J. McGahan and another, as administrators of Evelyn McGahan, deceased, filed a libel in admiralty in the District Court of the United States for the Western District of New York against the Steam Tug *Queen City*, her tackle, apparel, and furniture, to recover damages alleged to have been sustained through the death of deceased by drowning, due to the negligent operation of the *Queen City* upon the Erie Canal, in said district. The Attorney General of the State of New York appeared specially for the purpose of questioning the jurisdiction of the court, and filed a verified suggestion of the want of such jurisdiction over the *Queen City*, for the reason that at all times mentioned in the libel and at present she was the absolute property of the State of New York, in its possession and control, and employed in the public service of the State for governmental uses and purposes, and, at the times mentioned in the libel, was authorized by law to be employed only for the public and governmental uses and purposes of the State of New York, such purposes being the repair and maintenance of the Improved Erie Canal, a public work owned and operated by the State, and particularly the towing of dredges, the carrying of material and workmen, the towing of barges and vessels containing material, and the setting, replacing, and removing of buoys and safety devices. He prayed that the vessel be declared immune from process and free from seizure and attachment, and

that the libel and all proceedings thereunder be dismissed for want of jurisdiction.

The District Court overruled the suggestion and awarded process *in rem*, under which the *Queen City* was arrested. Thereupon the Attorney General, in behalf of the State, filed in this court, under leave granted, a petition for a writ of prohibition to require the District Court to desist from further exercise of jurisdiction and for a mandamus to require the entry of an order declaring the *Queen City* to be immune from arrest. An order to show cause was issued, to which the District Judge made return, embodying by reference the admiralty proceedings; and the matter was argued together with No. 25, Original, *Ex parte New York, No. 1*, just decided, *ante*, 490.

To the suggestion that the *Queen City* is the property of the State of New York, in its possession and control and employed in its public governmental service, it is objected at the outset that the record and proceedings in the suit in admiralty do not disclose the identity of the owner of the vessel or that she was employed in the governmental service of the State. We deem it clear, however, that the verified suggestion presented by the Attorney General of that State, in his official capacity as representative of the State and the People thereof, amounts to an official certificate concerning a public matter presumably within his official knowledge, and that it ought to be accepted as sufficient evidence of the fact, at least in the absence of special challenge. The suggestion was overruled and denied, with costs, and process thereupon ordered to issue against the vessel, without any intimation that there was doubt about the facts stated in the suggestion, or opportunity given to verify them further. It would be an unwarranted aspersion upon the honor of a great State to treat facts thus solemnly certified by its chief law officer, and accepted as true when passed upon by the District Court, as now requiring

verification. *Ex parte Muir*, 254 U. S. 522, differs widely, for there the suggestion that the vessel was exempt because of its ownership and character came not through official channels but from private counsel appearing as *amici curiæ*, who, on being challenged to submit proof in support of the allegations in the suggestion, refused to do so. Of course, there were other and more fundamental differences, but it is the one mentioned that especially concerns us upon the question of practice.

Accepting, as we do, the facts stated in the suggestion of the Attorney General, the record—aside from whether a suit in admiralty brought by private parties through process *in rem* against property owned by a State is not in effect a suit against the State, barred by the general principle applied in *Ex parte New York, No. 1*, No. 25, Original —presents the question whether the proceeding can be based upon the seizure of property owned by a State and used and employed solely for its governmental uses and purposes.

By the law of nations, a vessel of war owned by a friendly power and employed in its service will not be subjected to admiralty process; and this upon general grounds of comity and policy. *Schooner Exchange* v. *McFaddon*, 7 Cranch, 116, 144–147. In a case before Judge Francis Hopkinson in the admiralty court of Pennsylvania in 1781, on a plea to the jurisdiction, it was adjudged that marines enlisting on board a ship of war or vessel belonging to a sovereign independent state could not libel the ship for their wages. *Moitez* v. *The South Carolina*, Bee, 422; Fed. Cas. No. 9,697. The question whether by international law the rule of *The Exchange* is to be applied to other kinds of public vessels owned or controlled by friendly powers (see *The Parlement Belge* [1880], L. R. 5 Prob. Div. 197), was stirred in *Ex parte Muir*, *supra*, but found unnecessary to be decided. It does not now press for solution; for, aside from the obligations of inter-

national law, though upon principles somewhat akin, it is uniformly held in this country that even in the case of municipal corporations, which are not endowed with prerogatives of sovereignty to the same extent as the States by which they are created, yet because they exercise the powers of government for local purposes, their property and revenue necessary for the exercise of those powers are to be considered as part of the machinery of government exempt from seizure and sale under process against the city. As Mr. Chief Justice Waite said, speaking for this court in *Klein* v. *New Orleans*, 99 U. S. 149, 150, "To permit a creditor to seize and sell them to collect his debt would be to permit him in some degree to destroy the government itself." The rule was applied in the admiralty by the same learned Chief Justice, sitting on appeal at the circuit, in *The Fidelity*, 16 Blatchf. 569; Fed. Cas. No. 4,758, upon a well-considered opinion. To the same effect, *The Seneca* (1876), Fed. Cas. No. 12,668; *Long* v. *The Tampico* (1883), 16 Fed. Rep. 491, 494; *The Protector* (1884), 20 Fed. Rep. 207; *The F. C. Latrobe* (1886), 28 Fed. Rep. 377, 378; *The John McCraken*, 145 Fed. Rep. 705, 706.

The principle so uniformly held to exempt the property of municipal corporations employed for public and governmental purposes from seizure by admiralty process *in rem*, applies with even greater force to exempt public property of a State used and employed for public and governmental purposes.

Upon the facts shown, the *Queen City* is exempt, and the prohibition should be issued.

Rule absolute for a writ of prohibition.

EX PARTE IN THE MATTER OF LINCOLN GAS & ELECTRIC LIGHT COMPANY, PETITIONER.

ON PETITION FOR WRIT OF MANDAMUS.

No. 29, Original. Argued March 15, 16, 1921.—Decided June 1, 1921.

In a suit brought by a gas company against a city to enjoin the enforcement of an ordinance rate alleged to be confiscatory, this court by its former decision (250 U. S. 256) affirmed, with modifications, the decree of the District Court dismissing the bill, and issued its mandate, reciting the decision and directing "that such execution and proceedings be had in said cause as according to right and justice . . . ought to be had, the said appeal notwithstanding."

Held: (1) That the court below had jurisdiction, through a special master, to ascertain the amounts collected by the company from its customers, in excess of the ordinance rate, pending the litigation, and to require repayment thereof, with interest, in accordance with the terms of a bond that the company filed in the cause in order to obtain a supersedeas, with continuance of injunction, pending its appeal. P. 516.

(2) That the absence of the customers as parties was no obstacle to such enforcement of their equitable rights, represented in the litigation by the city and recognized and protected by the bond. P. 517.

(3) That the fact that the affirmance modified the lower court's decree so as to dismiss the bill without prejudice to the filing of another in case changed conditions should render the rate confiscatory, did not restrict the lower court's jurisdiction to the overcharges made before its decree was entered, since the ordinance rate remained presumably valid until proven otherwise in a new suit, and the bond required repayment of all overcharges collected while the company had the benefit of the injunction pending the appeal. P. 518.

Rule discharged.

THE case is stated in the opinion.

Mr. Robert A. Brown, with whom *Mr. Maxwell V. Beghtol* and *Mr. Charles A. Frueauff* were on the briefs, for petitioner.

Mr. C. Petrus Peterson for the City of Lincoln.

MR. JUSTICE PITNEY delivered the opinion of the court.

Following our decision in *Lincoln Gas & Electric Light Co.* v. *City of Lincoln*, June 2, 1919, 250 U. S. 256, our mandate went down to the District Court of the United States for the District of Nebraska, reciting our determination that its decree of September 23, 1915, should be modified as indicated in the opinion, and as so modified should be affirmed with costs; and proceeding as follows: "You, therefore, are hereby commanded that such execution and proceedings be had in said cause as according to right and justice, and the laws of the United States, ought to be had, the said appeal notwithstanding."

Upon the filing of this mandate, the District Court, on January 6, 1920, entered an order modifying its decree of September 23, 1915, as particularly required, and, at the same time, made an order retaining jurisdiction for the purpose of requiring the company to make refund and restitution to consumers of gas for all amounts collected over and above the legal rate pending the litigation, with interest, in accordance with the terms of a bond that the company had filed in the cause in order to obtain a *supersedeas*, with a continuance of injunction, pending its appeal from the decree of September 23, 1915. An appeal from the order retaining jurisdiction, taken by the company to this court, was dismissed because the order lacked finality. 253 U. S. 477. The mandate upon the dismissal again commanded the District Court "that such proceedings be had in said cause, as according to right and justice, and the laws of the United States, ought to be had, the said appeal notwithstanding." This having gone down, the court appointed a master, with direction to examine the books and accounts of the company and prepare an account of the amounts paid by consumers in excess of the ordinance rates during the pendency of any restraining order or injunction in the

cause; with other provisions not necessary to be mentioned.

The company applied to this court, obtained leave for the purpose, and filed a petition for a writ of mandamus to command the judge of the District Court to nullify and revoke the above mentioned orders and refrain from assuming jurisdiction over the cause as aforesaid. An order to show cause was issued, proper return thereto made by the judge, and the matter has been argued.

From the petition and return the following additional particulars appear: The original suit was commenced December 27, 1906, in the United States Circuit (now District) Court, by the company against the city and its officials as defendants seeking (among other things) to enjoin the enforcement of an ordinance regulating the price to be charged for gas. At the outset a restraining order was obtained, and this was followed by a temporary injunction, continued in force until final decree, and afterwards, pending an appeal to this court (223 U. S. 349), under a bond conditioned to account for overcharges if the rate ordinance should be sustained. After this first appeal, the litigation was continued until September 23, 1915, when the District Court made a final decree sustaining the rate ordinance and dismissing the bill. An application for allowance of an appeal to this court, with a *supersedeas* to keep the injunction in effect, was granted November 22, 1915, upon approval of a supersedeas bond tendered by the company for the purpose, in the penal sum of $575,000, to be paid to the clerk of the District Court for the benefit of all gas consumers who had purchased gas from the company during the pendency of the action from its commencement, and all consumers who should purchase gas thereafter until the final determination of the suit; with a condition reciting the decree of September 23, 1915, and the temporary injunction theretofore granted to restrain the putting into effect

of the rate ordinance, and providing that if the company should prosecute its appeal to effect, or failing to make its appeal good should answer all costs and damages and refund all overcharges collected from gas consumers above the price fixed by said ordinance, and should pay to the clerk of the District Court or his successor in office, for the benefit of all whom it might concern and in particular for the benefit of all consumers entitled to refunds, all overcharges collected since the granting of the original injunction, together with interest thereon, when the several parties lawfully entitled and the amount of refund due to each should have been ascertained in the action in such manner as the court should direct, the determination to be binding upon all parties to the bond, then the obligation should be void, otherwise to remain in force.

This appeal resulted in our decision of June 2, 1919, affirming the decree, with two modifications, one of which related to an occupation tax that was under attack in the same suit, but is not now material; the other was, to cause the dismissal of the suit as to the rate ordinance to be without prejudice to the commencement of a new action thereafter to restrain enforcement of the ordinance if it could be shown to be confiscatory in its effect under the new conditions.

Thus it appears that, during the entire course of this protracted litigation (except for a period when the company put the prescribed rate into effect as a test), the operation of the ordinance was suspended at the instance of the company, upon terms obliging it and its surety to refund all overcharges should it fail to make good its attack upon the established rate, and binding it to abide by the determination of the court in the same cause as to the amounts due, and pay the entire amount thus ascertained, with interest, to the clerk of the court, for the benefit of the consumers. According to the com-

pany's own statement, its books showing the accounts between it and its customers during the period from 1906 to 1920 contain more than 25,000 accounts, which are involved and complicated by other charges, so that an examination of them would involve much time and expense.

The principal contention upon which the petition for mandamus is rested is that, under our mandate following the decision of June 2, 1919, and the more recent one on dismissal of the subsequent appeal, no jurisdiction was conferred upon the District Court to take any action except to affirm its decree of September 23, 1915, dismissing the bill of complaint, after modifying the decree in the two particulars specified. It is said that, after an appeal, the court below has jurisdiction to proceed only in conformity with the direction of the mandate of the appellate court. This may be conceded. But here our mandate expressly commanded "that such execution and proceedings be had in said cause as according to right and justice, and the laws of the United States, ought to be had, the said appeal notwithstanding." Of course, whatever proceedings were taken thereafter in the same cause would be *further* proceedings; and the absence of the particular word "further" from the mandate is of no consequence. Emphatically the command called for proceedings in the nature of execution according to right and justice and the laws of the United States. The necessary meaning is that the court below should proceed to carry our decision into full effect according to right and justice; and, manifestly, this could not be done without proceeding to enforce the supersedeas bond according to its terms. The bond recognized that the city and its officials, who were the nominal parties defendant, were in a broad sense the representatives of the consumers, the parties actually concerned. It recognized that they were required to pay a rate for gas higher than the city

ordinance had determined to be just and reasonable; that these excess charges were being exacted pending the suit, in order that the company might be secure in the event that it should prevail, and, *per contra*, that they ought to be refunded with interest in the event that it should fail. It recognized that the consumers were so many in number, and the difficulty of sustaining their individual claims through separate suits would be so great, that to remit them to such suits would be a virtual denial of justice. And it recognized that to ascertain what should be due to them, to see to its collection from the company in case of its failure to make good its attack upon the ordinance, and to cause distribution to be made among the several claimants, was essential to the doing of complete equity, and therefore a natural incident to the jurisdiction of the court in the main cause. To retain jurisdiction for the purpose of requiring that restitution be made according to the terms of the bond was and is a necessary part of the duty of the District Court under the mandate.

The case is within the principle of *Arkadelphia Milling Co.* v. *St. Louis Southwestern Ry. Co.*, 249 U. S. 134, 143–147.

The contention that the jurisdiction fails because the consumers were not parties to the record nor in privity with the parties, and the company prayed no relief against them, is transparently unsound. The ordinance was intended to limit the gas rate for the benefit of the consumers; suit was brought against the municipality and its officers as the public representatives of the interests of the consumers; the restraining order and temporary injunction were intended for the very purpose of enabling the company to exact, pending the suit, rates in excess of those limited by the ordinance; the equitable duty to refund excess charges if the suit should fail was a duty owing to the consumers; and the form of the supersedeas

bond recognized all this, and was particularly designed for their protection.

Nor is there substance in the contention that the jurisdiction does not extend to overcharges subsequent to September 23, 1915. The thought suggested is, that the adjudication of the validity of the ordinance did not extend beyond the date of the final decree; that thereafter changed conditions, increased costs, and other circumstances referred to by us in 250 U. S. 268, may have rendered the limited rate non-compensatory, and the ordinance therefore confiscatory; and that at least the company, before being called upon to make restitution, ought to have a hearing upon this question as to the period subsequent to September 23, 1915. The contention overlooks the effect of the ordinance, which is presumptively valid, and has continuing force unless and until set aside by judicial decree as the result of an investigation, in which the burden of proof is upon the company; that the decree of September 23, 1915, is conclusive evidence that the company has made such an attempt, and has failed, and that the ordinance rate not only is lawful and binding, but will so continue unless and until the company, under the "without prejudice" clause, shall begin a new suit and maintain its contention that the rate through changed conditions has become non-compensatory. See *Missouri* v. *Chicago, Burlington & Quincy R. R. Co.*, 241 U. S. 533, 539. The contention also overlooks the fact that the bond itself was given subsequent to the decree appealed from, in terms for the benefit not only of gas consumers who theretofore had purchased gas from the company but of those who should purchase thereafter at any time before the final determination of the suit. The specific obligation thus assumed requires it to refund all overcharges collected in excess of the ordinance rate, so long as it had the benefit of the injunction pending the appeal; and the jurisdiction of the District Court to see

that the excess charges are refunded has corresponding extent.

We have said enough to demonstrate the existence of the jurisdiction of the District Court and its scope. Other points are raised, but they relate not to the question of jurisdiction, but to the mode in which the jurisdiction ought to be exercised. If they have substance—as to which we make no intimation—they will be subject to review in the appropriate method, after the conclusion of the proceeding.

Rule discharged.

ANCHOR OIL COMPANY v. GRAY ET AL.

APPEAL FROM THE CIRCUIT COURT OF APPEALS FOR THE EIGHTH CIRCUIT.

No. 188. Argued January 27, 1921.—Decided June 1, 1921.

1. The authority of the Secretary of the Interior under § 2 of the Act of May 27, 1908, c. 199, 35 Stat. 312, to approve an oil and gas lease made by a full-blood Creek allottee is not taken away, under § 9, by the death of the allottee. P. 522.
2. As respects the rights of the allottee's heirs and those claiming under them with notice of such outstanding lease, the approval relates back and takes effect as of the execution of the lease by the parties named therein. P. 522.
3. Under the Act of March 1, 1907, c. 2285, 34 Stat. 1026, the lodging of such lease in the office of the United States Indian Agent (now Superintendent of the Five Civilized Tribes) at Muskogee, for transmission to the Secretary of the Interior, constituted constructive notice to persons who, after the death of the lessor and after the lease had been approved by the Secretary, took another lease from the lessor's heirs. P. 522.
4. The provision of the Act of March 1, 1907, making the filing of Indian leases with the Indian Agent at Muskogee constructive

notice, was not superseded by the admission of Oklahoma as a State or as a result of provisions in the Enabling Act of June 16, 1906, and in the state constitution adopted thereunder. P. 523.

257 Fed. Rep. 277, affirmed.

THE case is stated in the opinion.

Mr. John Devereux, for appellant, submitted.

Mr. Preston C. West, with whom *Mr. A. A. Davidson* was on the brief, for appellees.

Mr. Geo. S. Ramsey, Mr. Malcolm E. Rosser, Mr. Villard Martin, Mr. James A. Veasey, Mr. John M. Chick, Mr. G. Earl Shaffer, Mr. James C. Denton and *Mr. Edgar A. deMeules*, by leave of court, filed a brief as *amici curiæ*.

MR. JUSTICE PITNEY delivered the opinion of the court.

This is a suit in equity instituted by appellant against appellees in a state court of Oklahoma, involving the ownership of a leasehold estate for oil and gas mining purposes in a Creek Indian allotment containing 80 acres, situate in Tulsa County, Oklahoma. Upon petition of appellees it was removed to the United States District Court upon the ground that it arose under the Constitution and laws of the United States; a motion to dismiss the suit was granted by that court, the decree of dismissal was affirmed by the Circuit Court of Appeals for the Eighth Circuit (257 Fed. Rep. 277), and an appeal brings the case here.

From appellant's amended petition it appears that the 80 acres were allotted to Jennie Samuels, a full-blood Creek Indian, as her distributive share of the lands of the tribe, and patented to her in the year 1903. December 5, 1914, pursuant to the Act of Congress of May 27, 1908, c. 199, § 2, 35 Stat. 312, and the rules and regu-

lations of the Secretary of the Interior, she made an oil and gas mining lease to McDonnell and Egan covering the lands in controversy, and this was filed in the office of the United States Indian Agent (now designated as Superintendent of the Five Civilized Tribes), Union Agency, at Muskogee, on January 5, 1915. It was forwarded by the Agent to the Commissioner of Indian Affairs with a favorable recommendation October 14, 1915; submitted by the Commissioner to the Secretary of the Interior for approval, and by him approved October 21, 1915. It was first filed for record in the county clerk's office of Tulsa County on August 10, 1916. Appellees are the owners of this lease, and are in possession of the lands.

Jennie Samuels died intestate October 11, 1915 (ten days before the Secretary's approval of the above lease), leaving as her heirs a daughter, Feney Rogers, and a granddaughter, Lina White, both full-blood Creek Indians, and to them the lands descended, subject to the lease. In the following December they made oil and gas leases to one Williams covering the same 80 acres, which were approved by the county court having jurisdiction of the estate of Jennie Samuels, and were recorded in the county records prior to August 10, 1916. These leases are held by appellant, whose interest was acquired, according to the averments of the petition, without knowledge or notice of the lease made by Jennie Samuels.

Appellees, having entered into possession, commenced drilling and discovered and produced petroleum and natural gas in paying quantities. This suit was commenced in January, 1917, appellant praying that their lease be canceled and they enjoined from interfering with appellant in the possession of the premises, and required to account.

Like the courts below, we find it unnecessary to consider the inherent validity or invalidity of appellant's

title, because we conclude that that of appellees is good and has priority over it. The authority of the Secretary of the Interior to approve and thereby confirm oil and gas mining leases made by full-blood Creek allottees upon their allotments—derived from § 2 of the Act of May 27, 1908—did not cease at the death of the allottee by reason of the provision of § 9 of the same act (35 Stat. 315), "That the death of any allottee of the Five Civilized Tribes shall operate to remove all restrictions upon the alienation of said allottee's land: *Provided*, That no conveyance of any interest of any full-blood Indian heir in such land shall be valid unless approved by the court having jurisdiction of the settlement of the estate of said deceased allottee." The validity of the lease made by Jennie Samuels having been conditioned upon the approval of the Secretary, such approval might be given at any time either before or after her death, so far as the rights of her heirs and those claiming under them with notice were concerned, and the approval when given related back and took effect as of the execution of the lease by the parties named therein (*Pickering* v. *Lomax*, 145 U. S. 310, 314, 316; *Lomax* v. *Pickering*, 173 U. S. 26, 27, 32; *Lykins* v. *McGrath*, 184 U. S. 169, 171–172).

The lease received the approval which gave it complete validity, some time before the first of the leases made by the heirs to Williams. And Williams was charged with notice of the prior grant, because, under the provision of the Act of March 1, 1907, c. 2285, 34 Stat. 1015, 1026, "The filing heretofore or hereafter on any lease in the office of the United States Indian agent, Union Agency, Muskogee, Indian Territory, shall be deemed constructive notice," the lodging of the prior lease with that officer in January, 1915, for transmission to the Secretary of the Interior, constituted notice to all parties thereafter claiming under her or her heirs. We agree that this provision was neither repealed nor superseded by the admis-

sion of the State of Oklahoma into the Union, or by the provisions of the Enabling Act, or the constitution of the State which became effective November 16, 1907. As the Circuit Court of Appeals pointed out (257 Fed. Rep. 282), § 1 of the Enabling Act (June 16, 1906, c. 3335, 34 Stat. 267), contained a proviso "that nothing contained in the said constitution shall be construed to limit or impair the rights of person or property pertaining to the Indians . . . or to limit or affect the authority of the Government of the United States to make any law or regulation respecting such Indians, their lands, property, or other rights by treaties, agreement, law, or otherwise, which it would have been competent to make if this Act had never been passed." While § 21 of the same act (34 Stat. 277), and § 2 of the Schedule to the constitution of Oklahoma (Rev. Laws Oklahoma, 1910, p. cxcix), contained provisions to the effect that laws in force in the Territory of Oklahoma at the time of the admission of the State not repugnant to its constitution and not locally inapplicable should be extended to and remain in force throughout the State, there was nothing to show an intent to repeal or supersede the provision of the Act of Congress of March 1, 1907, above quoted, or to establish the local recordation statutes in its place so far as related to Indian leases, such as we have here. See *Ex parte Webb*, 225 U. S. 663, 682–683.

The satisfactory reasoning of the courts below, which we have followed in outline, has the support of a well-considered decision by the Supreme Court of Oklahoma in *Scioto Oil Co.* v. *O'Hern*, 169 Pac. Rep. 483.

Appellant lays some stress upon particular provisions in the Jennie Samuels lease, but we find nothing in them to affect the result. They are sufficiently dealt with in the opinion of the Circuit Court of Appeals (257 Fed. Rep. 280–281).

Decree affirmed.

UNITED STATES *v.* HUTTO ET AL. (NO. 1).

ERROR TO THE DISTRICT COURT OF THE UNITED STATES FOR THE WESTERN DISTRICT OF OKLAHOMA.

No. 691. Argued April 11, 1921.—Decided June 1, 1921.

1. Revised Statutes, § 2078, declaring that "No person employed in Indian affairs shall have any interest or concern in any trade with the Indians, except for, and on account of, the United States," and subjecting the offender to a pecuniary penalty and removal from office, includes transactions with tribal Indians involving land or other property in respect of which the Government has no interest or control. P. 526.
2. This section defines an offense against the United States, within the meaning of Crim. Code, § 37, whether it be itself punishable through a criminal prosecution or only through civil action for the penalty. P. 528.

Reversed.

THE case is stated in the opinion.

Mr. Leslie C. Garnett, Special Assistant to the Attorney General, for the United States.

Mr. Sam K. Sullivan, with whom *Mr. Henry S. Johnston* was on the brief, for defendants in error:

Under § 2124, Rev. Stats., which is synonymous with § 2078 as to punishment, there is no other alternative than a civil action by the United States to recover all penalties accruing under offenses committed under the title of Indians, including § 2078. *United States* v. *Payne*, 22 Fed. Rep. 426; *In re Seagraves*, 4 Oklahoma, 422.

Section 2078 applies only to Indians who are wards of the Government and whose lands are restricted and does not apply to Indians who have received patents to their land. *Bluejacket* v. *Ewert*, 265 Fed. Rep. 823, 829.

The indictment for conspiracy must charge some act

that has been made a crime by the laws of the United States, or an act made to defraud the United States, and must state the act intended to be carried out by agreement of the parties so that it can be seen that the object of the conspiracy was a crime against the United States or to defraud the United States.

MR. JUSTICE PITNEY delivered the opinion of the court.

This writ of error was brought under the Criminal Appeals Act of March 2, 1907, c. 2564, 34 Stat. 1246, to review a judgment of the District Court sustaining demurrers to an indictment under § 37, Criminal Code, charging a conspiracy to violate § 2078, Rev. Stats., and overt acts done to effect the object of th conspiracy.

Section 37 prescribes: "If two or more persons conspire either to commit any offense against the United States, or to defraud the United States in any manner or for any purpose, and one or more of such parties do any act to effect the object of the conspiracy, each of the parties to such conspiracy shall be fined," etc.

Section 2078, Rev. Stats., reads thus: "No person employed in Indian affairs shall have any interest or concern in any trade with the Indians, except for, and on account of, the United States; and any person offending herein, shall be liable to a penalty of five thousand dollars, and shall be removed from his office."

The indictment alleges that A. Z. Hutto was a duly appointed and qualified Indian farmer for the Tonkawa Tribe of Indians, Ponca Reservation, Oklahoma, acting as such, and that, under an act of Congress and the rules and regulations promulgated by the Secretary of the Interior, it was his duty to superintend and direct farming and stock raising among said Tonkawa Tribe, to supervise the leasing of Indian lands, and to appraise their value for sale; that Hutto, J. R. White, Ray See, and J. R.

Ricks feloniously conspired together that Hutto, while so employed in Indian affairs, should have an interest and concern in certain trades with the Indians not for or on account of the United States, in violation of § 2078, Rev. Stats., that is to say, that Hutto, while so employed, should have an interest and concern in sales of land by Indians of said tribe, and in the purchase of automobiles and other commodities by said Indians, and that the alleged conspirators would and should persuade, induce, procure, and cause certain Indians named, members of said Tonkawa Tribe, to sell their lands, purchase automobiles and other commodities, borrow money and lend money, and that said Hutto should have an interest and profit in said sales, purchases, and loans. The alleged overt acts need not be recited.

Defendants having filed separate demurrers, the District Court at first sustained them upon the ground that the acts prohibited in § 2078, Rev. Stats., are not a crime against the United States, but acts for which a penalty is provided, to be collected only by a civil action, and hence cannot form the basis of a criminal conspiracy in violation of § 37, Crim. Code.

Upon a rehearing, the demurrers again were sustained, but upon the ground that § 2078 is inapplicable to transactions involving lands or other property with respect to which the Government has no interest or control, and that no such interest or control was alleged in the indictment.

Taking up the second point first: It seems to us the plain terms of § 2078 leave little room for discussion over the proposition that the prohibition is not confined to transactions involving lands or other property in respect to which the Government has an interest or control.

In early days, under the power conferred upon Congress by the Constitution (Art. I, § 8, cl. 3) to regulate commerce with the Indian tribes, some traffic was carried

on with the Indians upon the Government account. As early as the year 1796 (c. 13, 1 Stat. 452) the President was authorized to establish Indian trading posts on the frontiers and in the Indian country; and the agent appointed for each trading house was required to swear or affirm in his oath of office that he would not directly or indirectly be concerned or interested in any trade, commerce, or barter with any Indian or Indians but on the public account. This was a temporary measure, to continue for two years and to the end of the next session of Congress thereafter. Another act, to continue for three years, was approved April 21, 1806 (c. 48, 2 Stat. 402), which required of the superintendent of Indian trade an oath or affirmation faithfully to execute the trust committed to him, and that he would not directly or indirectly be concerned or interested in any trade, commerce, or barter but on the public account. A like oath was required of the agent appointed for each trading house. Still a third act for establishing trading houses with the Indian tribes, approved March 2, 1811 (c. 30, 2 Stat. 652), required a similar form of oath from the superintendent of Indian trade, and from each agent and assistant agent. This act, like the others, was limited to a brief duration.

Section 2078, Rev. Stats., was taken, with but slight change, from § 14 of an Act of June 30, 1834, c. 162, 4 Stat. 735, 738, entitled "An Act to provide for the organization of the department of Indian affairs," and designed not for the carrying on of trade or barter with the Indians on Government account, but to carry out treaty obligations, pay annuities and distribute merchandise to the Indians as stipulated, furnish them with domestic animals, implements of husbandry, and rations as the President might think proper, provide interpreters, blacksmiths, farmers, mechanics, and teachers, as required by treaty, and generally to promote friendly relations with

the Indians and advance their welfare. In this connection the provision of § 14, "that no person employed in the Indian department shall have any interest or concern in any trade with the Indians, except for, and on account of, the United States," manifestly had a significance extending quite beyond any pecuniary interest of the United States in government trade or barter with the Indians. In its original setting, and more emphatically when grouped in the Revised Statutes with other provisions having to do with the supervision and management of the affairs of the Indians, it manifestly was and is designed to insure integrity of conduct on the part of all persons employed in Indian affairs, and an impartial attitude towards the Indians, by excluding from persons so employed all motives of personal gain, so that the duty of the United States as trustee for these dependent peoples, recognized wards of the Government, might be performed with a single regard for their interests appropriate to the fiduciary relation. The purpose was to protect the Indians from their own improvidence; relieve them from temptations due to possible cupidity on the part of persons coming into contact with them as representatives of the United States; and thus to maintain the honor and credit of the United States, rather than to subserve its pecuniary interest.

The District Court erred in its construction of § 2078.

Nor can we sustain the other ground upon which it is contended the demurrers were well taken. Section 37, Criminal Code, is violated by a conspiracy "to commit any offense against the United States" accompanied or followed by an overt act done to effect the object of the conspiracy. It does not in terms require that the contemplated offense shall of itself be a criminal offense; nor does the nature of the subject-matter require this construction. A combination of two or more persons by concerted action to accomplish a purpose either criminal

or otherwise unlawful comes within the accepted definition of conspiracy. *Pettibone* v. *United States*, 148 U. S. 197, 203. The distinction between a conspiracy and the contemplated offense that forms its object has often been pointed out. *United States* v. *Rabinowich*, 238 U. S. 78, 85–86, and cases cited. And we deem it clear that a conspiracy to commit any offense which by act of Congress is prohibited in the interest of the public policy of the United States, although not of itself made punishable by criminal prosecution but only by suit for penalty, is a conspiracy to commit an "offense against the United States" within the meaning of § 37, Criminal Code, and, provided there be the necessary overt act or acts, is punishable under the terms of that section.

We have assumed, for the sake of the argument, that under § 2078, Rev. Stats., the United States is confined to the suit for penalty specifically mentioned; but we do not so decide, and in our view the present case does not require an expression of opinion upon that subject. See *United States* v. *Stevenson*, 215 U. S. 190, 197, *et seq.*

Judgment reversed, and the cause remanded for further proceedings in conformity with this opinion.

UNITED STATES *v.* HUTTO (NO. 2).

ERROR TO THE DISTRICT COURT OF THE UNITED STATES FOR THE WESTERN DISTRICT OF OKLAHOMA.

No. 692. Argued April 11, 1921.—Decided June 1, 1921.

Decided upon the authority of *United States* v. *Hutto, No. 1, ante,* 524. Reversed.

THE case is stated in the opinion.

Mr. Leslie C. Garnett, Special Assistant to the Attorney General, for the United States.

Mr. Sam K. Sullivan, with whom *Mr. Henry S. Johnston* was on the brief, for defendant in error.

MR. JUSTICE PITNEY delivered the opinion of the court.

This is a writ of error under the Criminal Appeals Act of March 2, 1907, c. 2564, 34 Stat. 1246, to review a judgment sustaining a demurrer to an indictment which, in essential respects, is precisely like that passed upon in *United States* v. *Hutto,* No. 691, just decided, *ante,* 524. In this case the demurrer was sustained upon the ground that § 2078, Rev. Stats., was inapplicable to transactions involving property with respect to which the Government had no interest or control. For the reasons stated in the opinion in No. 691, the judgment herein is

Reversed, and the cause remanded for further proceedings in conformity with this opinion.

CHOCTAW, OKLAHOMA & GULF RAILROAD COMPANY ET AL. v. MACKEY, AS COUNTY TREASURER OF HUGHES COUNTY, OKLAHOMA, ET AL.

APPEAL FROM THE CIRCUIT COURT OF APPEALS FOR THE EIGHTH CIRCUIT.

No. 211. Argued April 21, 1921.—Decided June 1, 1921.

1. The railroad right of way and station grounds here in question, now constituting, with the consent of Congress, parts of a through line of an extensive interstate system, are not exempt from state special tax assessments upon the ground that they are parts of a federal instrumentality, though originally granted by Congress with a purpose to develop coal lands of the Choctaw Nation, and though coal mines leased from the tribe are served by the railroad. P. 535.
2. A special assessment for a street improvement, levied by a city under Oklahoma Comp. Laws, 1909, § 724, on railroad property abutting on the improved street and designated on a map prepared by the city engineer, *held* to have sufficiently identified the property. P. 537.
3. The removal of such map from the city files and its possession meanwhile by purchasers of the improvement bonds, did not invalidate the assessment, the railroad companies not having been injured or misled by its absence and having had full knowledge of the assessment proceedings and the improvement. P. 538.
4. A railroad right of way and station grounds in Oklahoma, owned by a company in fee but subject to a right of reverter in the Creek Nation in case they cease to be used for railroad purposes, are liable to special assessment, under the Oklahoma laws, for a street improvement enhancing the value of the railroad use. P. 538.

261 Fed. Rep. 342, affirmed.

THIS was a suit brought in the District Court by the present appellants to avoid and enjoin enforcement of a special street improvement tax. The appeal is from a judgment of the Circuit Court of Appeals reversing a

judgment in their favor. The facts are stated in the opinion, *post*, 534.

Mr. C. O. Blake, with whom *Mr. W. R. Bleakmore*, *Mr. R. A. Tolbert*, *Mr. Roy St. Lewis*, *Mr. Thomas P. Littlepage* and *Mr. Sidney F. Taliaferro* were on the brief, for appellants:

The purpose of the acts of Congress was not alone to provide transportation, but both acts have as their principal object the development of the coal lands belonging to the Indians, and to this end the purchasers of the property and franchises of the Coal Company were authorized to organize and become a federal corporation, with the rights, immunities, powers and duties of the Coal Company, which was primarily a mining company with the power to build, acquire, maintain and operate roads, ways and railroads necessary or useful in the operation of any mine or quarry owned or operated by the corporation. By these acts of the Government, accepted by the companies, the premises sought to be charged with the assessment were impressed with a duty in relation to the congressional purpose, which would be obstructed by the sale, apart from the franchise, of portions of the lands so devoted to such use. The appellants were more than ordinary common carriers, in that they were charged and entrusted with a duty to accomplish the operation of the mines identified in the acts of Congress, and to transport the products thereof, as well as the United States mail.

The nature and purpose of such grants as those made to the Coal Company and to the Choctaw Company and of the estate thereby conferred have been definitely settled by this court. *Chicago &c. Ry. Co.* v. *United States*, 217 U. S. 180; *Spokane & B. C. Ry. Co.* v. *Washington & Great Northern Ry. Co.*, 219 U. S. 166; *Northern Pacific Ry. Co.* v. *Townsend*, 190 U. S. 267.

This contention, that the way and grounds were not subject to assessment, is supported by the decision in *Choctaw, Oklahoma & Gulf R. R. Co.* v. *Harrison*, 235 U. S. 292.

It is true that the court was there speaking more with reference to the mining of the coal than the transportation thereof, but the mining and the transportation are inseparably connected and it was as much the duty of the Government to see that the avenues of transportation for which it, as guardian of the interest of the Indians, had appropriated a portion of their lands, were kept open and that the lands of the Indians which were taken for rights of way and station grounds were held intact, as it was to see that the coal mines were opened and operated.

At the time of the making of the grants to the Coal Company and its successor, the Choctaw Company, and of the authorization of the letting to the Rock Island Company, there was in effect in the United States a rule of property, arising out of the decision of this court in the case of *East Alabama Ry. Co.* v. *Doe*, 114 U. S. 340, that no part of the right of way of a railway line may be sold under process separate from the franchise under which it is held.

There are numerous state decisions to the contrary, but they are in the minority and do not relate to congressional grants. It is fair to assume that Congress, in granting the way and grounds, incorporated as integral parts thereof the rule of property so disclosed by the highest court and generally accepted in the courts of the land. We do not think that this court has since shown any disposition to change the rule so established. *Nadeau* v. *Union Pacific R. R. Co.*, 253 U. S. 442; *Buncombe County Commissioners* v. *Tommey*, 115 U. S. 122.

It may be said that no intention should be imputed to Congress to empower or suffer the State or its municipalities to dismember the thoroughfare so secured, either

with or without the consent of private investment therein. Congress was creating a public thoroughfare for all of the general uses and for a specific use to which a special interest of the Government and of the Indian nations attached.

The grantee and its lessees and assigns, in fact all persons, were forbidden to use the granted ways and grounds for any other purposes.

The proceedings to make and enforce the assessment were not such as to afford due process of law.

The state laws did not authorize the assessment.

Mr. Jacob B. Furry, with whom *Mr. Geo. S. Ramsey*, *Mr. W. H. Harris*, *Mr. J. W. Harbaugh*, *Mr. W. T. Anglin* and *Mr. Alfred Stevenson* were on the brief, for appellees.

MR. JUSTICE BRANDEIS delivered the opinion of the court.

This suit was brought in the United States District Court for the Eastern District of Oklahoma by the Chicago, Rock Island & Pacific Railway Company to have declared void a special assessment for street improvement made against part of its right of way and station grounds in the City of Holdenville, Oklahoma, and to enjoin the taking of any proceedings to enforce the same. The Choctaw, Oklahoma & Gulf Railroad Company, the lessor, was joined as plaintiff. The defendants are the county treasurer, the city, and holders of bonds issued to pay for the improvement. The street improved, called Oklahoma Avenue, runs parallel to the main tracks. The station grounds abut on the Avenue for a distance of 1641 feet, and the parcel assessed extends back from the Avenue 150 feet to the centre of the right of way. Over this street a large part of the traffic to and from the station necessarily passes. For between it and the main

tracks lie the passenger depot, the freight houses, the express office, the cotton platform, an oil warehouse, grain elevators, coal bins and the team tracks. The assessment is assailed as invalid on several grounds. The chief contention is that the property is immune from assessment by the State because that part of the railroad was an instrumentality of the Federal Government. The other grounds of attack are that in laying the assessment the property was not sufficiently identified, and that the assessment of a railroad right of way and station grounds is not authorized by the law of the State. The District Court entered a decree for plaintiffs which was reversed by the Circuit Court of Appeals with directions to dismiss the bill. 261 Fed. Rep. 342. The case comes here under § 241 of the Judicial Code.

First. The claim of immunity from assessment rests upon these facts: The right of way and station grounds are on land which had belonged to the Creek Nation before the town (now city) was established under direction of the Secretary of the Interior, pursuant to the original Creek Agreement. Act of March 1, 1901, c. 676, § 10, 31 Stat. 861, 864. The Rock Island acquired its interest on March 24, 1904, under a lease from the Choctaw, Oklahoma & Gulf, for a period of 999 years, of all of its railroad property. The lessor company had in locating its railroad through Holdenville taken, besides the right of way 100 feet wide, an additional strip for station purposes 200 feet wide with a length of 3,000 feet; having acquired the power so to do by succeeding to the powers and franchises of the Choctaw Coal and Railway Company. To that company Congress had in 1888 granted the right to build a railroad in Indian Territory, with a branch line to coal mines leased from the Choctaw Nation.[1]

[1] Act of Congress, February 18, 1888, c. 13, 25 Stat. 35. Section 2, provides:

"That said corporation is authorized to take and use for all purposes

The contention is that the railroad is an instrumentality through which the Government undertook to perform its obligation to develop coal lands belonging to the Indians; and that, if the railroads' interest in the right of way and station grounds could be subjected to a special assessment and possible sale thereunder apart from the railroad franchises, the congressional purpose might be obstructed. *Choctaw, Oklahoma & Gulf R. R. Co.* v. *Harrison*, 235 U. S. 292; see also *Northern Pacific Ry. Co.* v. *Townsend*, 190 U. S. 267; *Indian Territory Illuminating Oil Co.* v. *Oklahoma*, 240 U. S. 522.

The mere fact that property is used, among others, by the United States as an instrument for effecting its purpose does not relieve it from state taxation. The most that can be said here is that among the public served by this railroad are some mines on land leased from the Choctaw Nation. The right of way and station grounds in question, instead of being as was perhaps originally contemplated by the Act of February 18, 1888, part of a branch to leased "coal veins," have become an integral

---

of railway, and for no other purpose, a right of way one hundred feet in width through said Indian Territory for said main line and branch of the Choctaw Coal and Railway Company; and to take and use a strip of land two hundred feet in width, with a length of three thousand feet, in addition to right of way, for stations, for every ten miles of road. . . .

"*Provided further*, That no part of the lands herein authorised to be taken shall be leased or sold by the company, and they shall not be used except in such manner and for such purposes only as shall be necessary for the construction and convenient operation of said railroad, telegraph, and telephone lines; and when any portion thereof shall cease to be so used, such portion shall revert to the nation or tribe of Indians from which the same shall be taken."

See also Acts of February 13, 1889, c. 152, 25 Stat. 668; October 1, 1890, c. 1252, 26 Stat. 640; February 21, 1891, c. 249, 26 Stat. 765; January 22, 1894, c. 14, 28 Stat. 27; August 24, 1894, c. 330, 28 Stat. 502; April 24, 1896, c. 122, 29 Stat. 98; March 28, 1900, c. 111, 31 Stat. 52.

part of through lines of a great railroad system.[1] Holdenville is on the main line of the Choctaw, Oklahoma and Gulf which extends from the west bank of the Mississippi River through Arkansas and Oklahoma to the Texas state line, a distance of nearly 650 miles. By the lease to the Rock Island, this railroad has become a part of the through lines of a much larger system. And even though it be granted that the Federal Government utilized the railroad as an instrument in working out its policy toward the Indians the tax upon the railroad property would be none the less valid. *Railroad Co.* v. *Peniston*, 18 Wall. 5, 36; *Western Union Telegraph Co.* v. *Massachusetts*, 125 U. S. 530, 546–548; *Central Pacific R. R. Co.* v. *California*, 162 U. S. 91, 125; *Thomas* v. *Gay*, 169 U. S. 264.

Second. Equally unfounded is the contention that the assessment did not sufficiently identify the property, and was hence a denial of due process of law. The Oklahoma statute under which the assessment was made (Comp. Laws, 1909, § 724), provides that:

"If any portion of the property abutting upon such improvement shall not be platted into lots and blocks, the mayor and council shall include such property in proper quarter block districts for the purpose of appraisement and assessment, as herein provided."

The railroad premises not having been platted, the Mayor and Council adopted a map of the city engineer, on which the right of way and station grounds were set forth in proper quarter block districts. The premises

[1] When Congress authorized the purchasers of the property and franchises of the insolvent Choctaw Coal and Railway Company to reorganize as the Choctaw, Oklahoma and Gulf, it conferred upon the latter "perpetual succession." Act of August 24, 1894, c. 330, § 5, 28 Stat. 502, 503. Later it greatly enlarged its powers, conferring authority without limit, to construct its railroad over any Indian reservation and to acquire and consolidate with practically any connecting line. Acts of April 24, 1896, c. 122, 29 Stat. 98; March 28, 1900, c. 111, 31 Stat. 52.

assessed were those quarter blocks thereon designated as abutting on that portion of Oklahoma Avenue which was improved; and the designation was clear. Some time after the passage of the ordinance providing for the assessment this map was inadvertently removed from the city files, sent to the purchasers of the bonds issued for the improvement, and not returned until after the lapse of a considerable time. But the railroad companies had full knowledge of the proceedings relating to the assessment and of the commencement, the progress and the completion of the improvement. There is not even a suggestion that they were injured or misled by the temporary absence of the map from the city files. Such removal did not invalidate the assessment. Furthermore, mere insufficiency of description or other irregularity in the proceeding would not entitle abutting landowners to the relief sought here. Their right would be limited to having the Mayor and Council make a reassessment conforming to the regulations prescribed by the statute. See Oklahoma Laws, 1907–8, p. 176, §§ 7–8; *Oklahoma Ry. Co.* v. *Severns Paving Co.*, 251 U. S. 104.

Third. The remaining contention is that the statutes of the State do not authorize assessment for betterments upon a railroad right of way and station grounds. The mere fact that there is a possible right of reverter in the Creek Nation does not preclude the railroad's interest from being subject to general taxation; see *Baltimore Shipbuilding Co.* v. *Baltimore*, 195 U. S. 375; *Maricopa & Phœnix R. R. Co.* v. *Arizona*, 156 U. S. 347, 352. The railroad's interest, as stated in *Rio Grande Western Ry. Co.* v. *Stringham*, 239 U. S. 44, 47, is "neither a mere easement, nor a fee simple absolute, but a limited fee, made on an implied condition of reverter in the event that the company ceases to use or retain the land for the purposes for which it is granted, and carries with it the incidents and remedies usually attending the fee." In

effect the railroad is the absolute owner of the land. Its use is, and necessarily must be, exclusive. The betterment for which the assessment was levied is of a nature to enhance the value of that use. And it is the railroad, as distinguished from the Creek Nation, owner of a possible reversionary interest, to which the benefit from the improvement enures. For the railroad's use will continue indefinitely, while the specific improvement to be paid for can have but a short life.

Street paving is a class of betterment to which the railroad right of way and station property is generally held to be subject. See *Louisville & Nashville R. R. Co.* v. *Barber Asphalt Co.*, 197 U. S. 430; *Branson* v. *Bush*, 251 U. S. 182. The rule appears to have been accepted in Oklahoma. Compare *Missouri, Kansas & Texas Ry. Co.* v. *Tulsa*, 45 Oklahoma, 382; *Oklahoma Ry. Co.* v. *Severns Paving Co.*, 251 U. S. 104. It is urged that, if the assessment is left unpaid, a sale to enforce the lien would sever an integral part of the railway. The same objection might be urged against the validity of a lien for general taxes locally assessed upon railroad property or a mechanic's lien upon the same. The objection is clearly unsound. Compare *Kansas City Southern Ry. Co.* v. *Tansey*, 41 Oklahoma, 543; *Kansas City Southern Ry. Co.* v. *Rosier*, 38 Oklahoma, 231; *Kansas City Southern Ry. Co.* v. *Wallace*, 38 Oklahoma, 233. If the validity of the assessment is established, it may be assumed that due payment will follow. At all events we have no occasion to deal now with the method and means to be pursued in enforcing it.

Affirmed.

YAZOO & MISSISSIPPI VALLEY RAILROAD COMPANY ET AL. *v.* NICHOLS & COMPANY.

CERTIORARI TO THE SUPREME COURT OF THE STATE OF MISSISSIPPI.

No. 216. Argued April 22, 1921.—Decided June 1, 1921.

The Uniform Bill of Lading, approved by the Interstate Commerce Commission June 27, 1908, provides that "Property destined to or taken from a station, wharf, or landing at which there is no regularly appointed agent shall be entirely at risk of owner after unloaded from cars or vessels or until loaded into cars or vessels, and when received from or delivered on private or other sidings, wharves, or landings shall be at owner's risk until the cars are attached to and after they are detached from trains."

Held: (1) That the words "at which there is no regularly appointed agent" apply to both clauses, (p. 544) and (2) that, where goods had been loaded into an outgoing car on a spur used generally by the public, which ran parallel to the main track and connected with it near a station having such an agent, and a bill of lading had issued, the goods were at the carrier's risk while the car remained there waiting to be attached to a train at the carrier's convenience, and the fact that the spur was partly on private land was immaterial. P. 546.

120 Mississippi, 690, affirmed.

REVIEW of a judgment of the Supreme Court of Mississippi, affirming a judgment against the railroad company in an action brought by the present respondent to recover for the loss of goods shipped on petitioner's railroad. The facts are stated in the opinion, *post*, 543.

Mr. Charles N. Burch, with whom *Mr. H. D. Minor*, *Mr. Clinton H. McKay* and *Mr. W. S. Horton* were on the brief, for petitioners:

The first clause refers to a public station, wharf or landing; the second clause refers to private wharves or landings and private sidings, and also to all other sidings,

whether the same be quasi-private or public, or quasi-public, but not including those public side tracks which are immediately adjacent to and serve a public station, and from which freight is unloaded into a public depot or loaded from a public depot into cars on such public sidings. The words "private or other sidings" do not include side tracks, team tracks, or house tracks immediately adjacent to a freight house, which are an integral part of the public freight house facilities. The last mentioned sidings are included in the term "station" in the first clause, as such tracks are as much a part of the station as the station platform. It appears from this record that there is what is called a house track which is immediately parallel with and adjacent to the freight depot and platforms.

At a station where an agent is maintained, the railroad becomes responsible as soon as goods are deposited on the freight house floor or platform, or placed in a car which is on a track which serves the freight house, and a bill of lading is issued.

The first clause means that if a carrier has a public station, wharf or landing, at which it does not maintain a regularly appointed agent, the carrier shall be responsible until inbound goods are unloaded from the cars, and as soon as outbound goods are loaded into cars.

The second clause means that when a party receives or delivers goods, not at a regular freight house, or not at a track serving the regular freight house, but on a private or other siding, then the liability of the carrier as a common carrier shall not begin until (as to outbound freight), the loaded cars are attached to trains, and as to inbound freight the common carrier's liability shall cease when cars are detached from trains.

We insist that where the shipper loads his own freight, as is the case here, and loads it at a public station, wharf, or landing, at which there is no regularly appointed

agent, the liability of the carrier under the first clause attaches as soon as the goods are loaded into a car; and we further insist that when a shipper does not choose to load his freight at a regular public freight house, but, on the other hand, chooses to load his freight at a private wharf or private landing or on any kind of a side track (which does not serve a public freight house), then the liability of the common carrier does not attach until the car containing such goods is attached to a train.

It is not reasonable to expect the station agent to have supervision of and to take care of property in cars on side tracks which are not immediately at a station building, but which are some distance therefrom, and particularly when the side track is located on land not belonging to the railroad company.

The court judicially knows that a large part of the tonnage of the country is loaded into cars which are on tracks quite remote from the place of business of the local station or depot agent. As to such cars the railroad company has a right to insist that its liability as a common carrier shall not begin until such cars are attached to trains. No one is required to load his freight on a private side track or a public side track remote from the regular depot. A shipper has the right if he chooses to deliver his freight at the regular freight depot or to load it into cars placed immediately adjacent to the regular freight depot. If the shipper, for his own convenience, elects to load his cars at some other point, then, certainly the carrier has a right to say that, in such event, the carrier's liability as a common carrier or insurer, shall not begin until the cars are attached to a train—until the cars are in the actual, as distinguished from the constructive possession of the carrier.

The loading in this case was done by the shipper on private property at a gin owned by a third party and a thousand feet distant from the station. Under these

facts we insist that the exemption granted by the last clause applies with full force.

Mr. John W. Cutrer, with whom *Mr. Sam C. Cook, Jr.*, and *Mr. John C. Cutrer* were on the brief, for respondent.

MR. JUSTICE BRANDEIS delivered the opinion of the court.

In November, 1917, the Yazoo & Mississippi Valley Railroad Company issued to Nichols & Company a bill of lading for 31 bales of cotton which had been loaded into a box car at Alligator, Mississippi, for shipment to Memphis, Tennessee. Before the loaded car had been attached to any train or engine it was destroyed by fire. The shipper sued in a state court of Mississippi to recover the value of the cotton. The carrier contended that by the terms of the bill of lading it was relieved from liability. The provision relied upon was the second clause of the last paragraph of section 5 of the Uniform Bill of Lading, approved by the Interstate Commerce Commission June 27, 1908, and duly filed and published as part of the railroad's tariff. The paragraph referred to is this:

"Property destined to or taken from a station, wharf, or landing at which there is no regularly appointed agent shall be entirely at risk of owner after unloaded from cars or vessels or until loaded into cars or vessels, and when received from or delivered on private or other sidings, wharves, or landings shall be at owner's risk until the cars are attached to and after they are detached from trains."

The shippers insisted that the provision did not apply, because at Alligator there was a regularly appointed agent and that the second clause of the paragraph, like the first, was applicable only to stations where there was none. The shippers also contended, on the following facts which

were undisputed, that the place where the car was received was, in effect, a part of the carrier's terminal and not a "private or other" siding within the meaning of the above provision.

The cotton had been loaded from the platform of a gin located at the blind end of a spur which leads from the main line at a point near the depot. The spur which is 1,000 feet long had been built by the railroad many years before at its own expense. About half of it is on the railroad right of way and runs parallel to the main line; the rest is on private land. Under the contract for building the spur the landowner furnished free the right of way over his own land; but the railroad was to have full control over the spur and reserved the right to abandon it at any time and remove the track material. The spur was used generally by the public for loading and unloading carload freight. The only track scale at Alligator was on it—as was also another gin.

Each party requested a directed verdict. A verdict was directed for the shippers. The judgment entered thereon was affirmed by the Supreme Court of Mississippi on the ground that the clause in question applies only to stations at which there is no regularly appointed agent. 120 Mississippi, 690. In the appellate courts of the States in which the question had arisen the decisions were conflicting.[1] For this reason a writ of certiorari was granted. 251 U. S. 550. The only question requiring decision here

---

[1] The clause was held not applicable in *McClure* v. *Norfolk & Western Ry. Co.*, 83 W. Va. 473; *Jolly* v. *Atchison, Topeka & Santa Fe Ry. Co.*, 21 Cal App. 368. It was applied under different facts in *Chickasaw Cooperage Co.* v. *Yazoo & Mississippi Valley R. R. Co.*, 141 Arkansas, 71; *Standard Combed Thread Co.* v. *Pennsylvania R. R. Co.*, 88 N. J. L. 257; *Bers* v. *Erie R. R. Co.*, 225 N. Y. 543; 163 N. Y. Supp. 114; *Siebert* v. *Erie R. R. Co.*, 163 N. Y. Supp. 111. See also *Bianchi & Sons* v. *Montpelier & Wells River R. R.*, 92 Vermont, 319; *Bainbridge Grocery Co.* v. *Atlantic Coast Line R. R. Co.*, 8 Ga. App. 677.

is whether the court below gave the correct construction to the clause. In our opinion it did.

Whether goods destroyed, lost or damaged while at a railroad station were then in the possession of the carrier as such, so as to subject it to liability in the absence of negligence, had, before the adoption of the Uniform Bill of Lading, been the subject of much litigation. At stations where there is a regularly appointed agent the field for controversy could be narrowed by letting the execution of a bill of lading or receipt evidence delivery to and acceptance by the carrier; and by letting delivery of goods to the consignee be evidenced by surrender of the bill or execution of a consignee's receipt. But at non-agency stations this course is often not feasible. There the field for controversy as to the facts was particularly inviting and the reasons persuasive for limiting the carrier's liability. Local freight trains are often late. Shippers or consignees cannot be expected to attend on their arrival. Less than carload freight awaiting shipment must ordinarily be left on the station platform to be picked up by the passing train and lots arriving must be dropped on the platform to be called for by the consignee. At such stations the situation in respect to carload freight is not materially different. And this is true whether the car be loaded for shipment on the public siding or on a neighboring private siding, and whether the arriving loaded car be shunted onto a public siding or a private siding. There carload, as well as less than carload, freight, whether outgoing or incoming, must ordinarily be left unguarded for an appreciable time. It is not unreasonable that shippers at such stations should bear the risks naturally attendant upon the use. The reason why an agent is not appointed is that the traffic to and from the station would not justify the expense. The station is established for the convenience of shippers customarily using it. And the paragraph here in question

was apparently designed to shift the risk from the carrier to shipper or consignee of both classes of freight. It does so in the case of less than carload freight by having the carrier's liability begin when the goods are put on board cars and end when they are taken off. It does so in the case of carload freight by limiting liability to the time when the car is attached to or detached from the train. But, at a station where there is a regularly appointed agent, it would be obviously unreasonable to place upon the shipper, after a bill of lading has issued, the risks attendant upon the loaded car remaining on the public siding because it has not yet been convenient for the carrier to start it on its journey. It would likewise be unreasonable to place upon the consignee at such a station the risk attendant upon the arriving car's remaining on the siding before there has been notice to the consignee of arrival and an opportunity to accept delivery. The situation there would be practically the same whether the loaded cars were left standing on a public siding or on a siding to a private industry on the railroad's right of way, as in *Swift & Co.* v. *Hocking Valley Ry. Co.*, 243 U. S. 281, or on a siding, partly on the railroad's right of way and partly on private land, as in *Chicago & Northwestern Ry. Co.* v. *Ochs*, 249 U. S. 416, and *Lake Erie & Western R. R. Co.* v. *State Public Utilities Commission*, 249 U. S. 422, when the siding is, either by state law or by agreement and in fact, a part of the carrier's terminal system.

If we approach the construction of the second clause of the last paragraph of section 5 of the Uniform Bill of Lading in the light of this practical situation all doubt as to its meaning must vanish. It could not have been intended that at stations where there are regularly appointed agents outgoing loaded cars for which bills of lading have issued and which are left standing on a siding solely to await the carrier's convenience are to be at the risk of the shipper. And this is true whether the siding

be a strictly public one, or a semi-public one as in the *Ochs* and *Lake Erie & Western Cases, supra*, and the case at bar; or whether it be a siding privately used but owned by the railroad as in the *Swift Case, supra;* and in such cases the fact that the spur extends over land not part of the carrier's right of way is immaterial. The construction contended for by the railroad, even if not applied to team tracks in the freight yards of a great city, would place all loaded cars arriving elsewhere at the owner's risk from the moment they were detached from a train, although the consignee had not even been notified of their arrival.

It is clear that the immunity conferred by the last paragraph of section 5 does not apply to loaded cars on the spur here involved. Whether the same rule should apply to cars on strictly private industry tracks effectively separated from the terminal and exclusively under private control, like the industry tracks involved in *Bers* v. *Erie R. R. Co.*, 225 N. Y. 543, we have no occasion to determine.

Affirmed.

UNITED STATES *v.* PFITSCH.

ERROR TO THE DISTRICT COURT OF THE UNITED STATES FOR THE SOUTHERN DISTRICT OF NEW YORK.

No. 246. Argued March 22, 1921; restored to docket for reargument on question of jurisdiction April 11, 1921; reargued April 25, 1921.—Decided June 1, 1921.

Section 10 of the Lever Act (August 10, 1917, c. 53, 40 Stat. 276, 279), providing that any person dissatisfied with the President's award for supplies requisitioned under that section shall receive 75% of the award and may sue the United States for the balance claimed, confers jurisdiction on the District Courts "to hear and determine all such controversies,"—while other sections of the act providing for requisi-

tions and awards in respect of other classes of property, entitle persons dissatisfied to sue the United States "in the manner provided by § 24, par. 20, and § 145 of the Judicial Code," which confer concurrent jurisdiction on the District Courts and the Court of Claims to adjudicate claims against the United States. *Held*, referring to the legislative history of the act and to other acts *in pari materia*, that the jurisdiction under § 10 is conferred exclusively on the District Courts as part of their ordinary jurisdiction over actions at law for money, of which the right to trial by jury is an incident, and that a judgment rendered under that section is therefore not reviewable in this court by direct writ of error. P. 550.

Writ of error dismissed.

ERROR to review a judgment of the District Court in an action under § 10 of the Lever Act. The facts are stated in the opinion.

Mr. Assistant Attorney General Davis, with whom *Mr. P. M. Cox* was on the brief, for the United States.

Mr. Arthur B. King, with whom *Mr. Holmes V. M. Dennis, Jr.*, was on the brief, for defendant in error.

Mr. Royal E. T. Riggs, by leave of court, filed a brief as *amicus curiæ*.

MR. JUSTICE BRANDEIS delivered the opinion of the court.

Pursuant to § 10 of the Lever Act (August 10, 1917, c. 53, 40 Stat. 276, 279) the President requisitioned for the Army on April 18, 1918, a radial drill belonging to Pfitsch. The Board of Appraisers of the War Department found its then value to be $3,979.50, and awarded him that amount as compensation. Pfitsch declared this amount was unsatisfactory and insisted that the value was greater and that he was entitled also to interest from the date of the taking. On February 5, 1919, the Government paid him an amount equal to 75 per centum of the award.

Thereupon, this suit was brought by him in the District Court of the United States for Southern New York to recover the balance alleged to be due. The case was tried, by agreement, without a jury. The court found the value to be $4,550 and entered judgment for the part then unpaid together with interest from the date of taking, at the rate of six per cent. on the amounts from time to time unpaid. The Government brought the case here by direct writ of error and assigned as the only error that interest should not have been allowed.

The preliminary question arises whether this court has jurisdiction on direct writ of error. The answer to be given to it depends upon the nature of the jurisdiction conferred upon the District Court by § 10 of the Lever Act. If the jurisdiction is to be exercised in the manner provided by § 24, paragraph 20, of the Judicial Code, which confers upon the District Court jurisdiction concurrent with the Court of Claims, a direct writ of error lies from this court. *J. Homer Fritch, Inc.* v. *United States*, 248 U. S. 458. If, however, the jurisdiction is the ordinary jurisdiction of the District Court, the writ of error should have gone, in the first instance, from the Circuit Court of Appeals under § 128 of the Judicial Code. The nature of the jurisdiction of the District Court is of importance, not only because of the question directly involved, but because the answer given to it will determine incidentally whether plaintiffs who proceed under § 10 are entitled to a trial by jury. For § 24, paragraph 20 of the Judicial Code declares that "all suits brought and tried under the provisions of this paragraph shall be tried by the court without a jury." See *United States* v. *McGrane*, 270 Fed. Rep. 761; *Filbin Corporation* v. *United States*, 266 Fed. Rep. 911.

Section 10 provides that the President may requisition foods, feeds, fuels and other war supplies with the necessary storage facilities, and that he shall ascertain and pay

just compensation for them. But if any person is not satisfied with the President's award he is to receive 75% of the award and for the balance claimed "shall be entitled to sue the United States . . . and jurisdiction is hereby conferred on the United States District Courts to hear and determine all such controversies." Three later sections of the act which provide for requisitioning other classes of property,—§ 12 relating to factories, mines and pipe lines; § 16, to distilled spirits; and § 25, to coal or coke plants or businesses,—make provision for suits against the United States to recover just compensation in terms materially different from that in § 10. Each of those three sections provides in identical terms that a person dissatisfied with the President's award "shall be entitled to sue the United States . . . in the manner provided by Section twenty-four, paragraph twenty, and Section one hundred and forty-five of the Judicial Code." The latter of these sections of the Judicial Code confers jurisdiction upon the Court of Claims to adjudicate claims against the United States, and the former confers upon the District Courts jurisdiction concurrent with the Court of Claims in cases which do not involve more than ten thousand dollars. Thus, while §§ 12, 16 and 25 of the Lever Act, in terms, confer jurisdiction concurrently upon the Court of Claims and the District Courts sitting as a court of claims, § 10, in terms, confers jurisdiction to hear all cases arising under it upon the District Courts alone.

The question presented to us is whether this exclusive jurisdiction granted the District Courts by § 10 is to be exercised in accordance with the law governing the usual procedure of a District Court in actions at law for money compensation or by the provisions of the law governing the exceptional jurisdiction concurrent with the Court of Claims where it sits without a jury.

The legislative history of the Lever Act establishes that

the difference of the jurisdictional provision in § 10 from those of §§ 12, 16 and 25 was the result not of inadvertence, but of deliberate action in the face of opposition. The jurisdictional provision of § 10, as introduced into the House of Representatives and as originally passed by it, was in the precise form in which it was enacted into law. 65th Cong., 1st sess., House Rep. 75; 55 Cong. Rec. 4113. When the bill reached the Senate from the House, the Senate Committee reported an amendment striking out the House provision and substituting a provision which made § 10 in this respect identical with §§ 12, 16 and 25. That is, the Senate Committee's amendment provided that suits under § 10 should be brought against the United States "in the manner provided by section 24, paragraph 20, and section 145 of the Judicial Code." 55 Cong. Rec. 4626. This would have conferred concurrent jurisdiction upon the Court of Claims and the District Courts sitting as a court of claims. As so amended § 10 was passed by the Senate; but the House refused to concur in this amendment. And this disagreement, with eight others relating to § 10, was sent to the Conference Committee. 55 Cong. Rec. 5473. The House conferees recommended receding from objections to the eight other Senate amendments of this section, but they insisted upon the objection to the change of the jurisdictional provision. 55 Cong. Rec. 5733–5737. The Senate conferees recommended receding from its amendment to the jurisdictional provision and that the original House provision be restored. 55 Cong. Rec. 5709. In reporting for the House conferees, Mr. Lever said of this amendment:

"Amendment 30. This amendment gives jurisdiction, in suits to recover just compensation under section 10 of the House Bill, to the Court of Claims in addition to the United States district courts. The Senate recedes." 65th Cong., 1st sess., House Rep. No. 117, p. 14; 55 Cong. Rec. 5737.

It is plain, then, that Congress had this question presented to its attention in a most precise form. It had the issue clearly drawn between granting for the adjudication of cases arising under this section concurrent jurisdiction in the Court of Claims and the District Courts without a trial by jury, or of establishing an exclusive jurisdiction in the District Courts of which the right to a jury trial is an incident. The first alternative was rejected, and the reason given for this rejection in the statement of the House conferees is that the proposed amendment would confer jurisdiction upon the Court of Claims. It is difficult to conceive of any rational ground for rejecting the clear and explicit amendment made by the Senate except to accord a trial by jury. All difficulties of construction vanish if we are willing to give to the words of § 10, deliberately adopted, their natural meaning.

Furthermore, it is significant that this is not the only occasion upon which Congress has provided for suits against the United States exclusively in the District Courts. Section 1 of the War Risk Insurance Act of May 20, 1918, c. 77, 40 Stat. 555, provides that suits upon insurance policies "may be brought against the United States in the district court of the United States in and for the district in which such beneficiaries or any one of them resides." The Act of March 4, 1919, c. 125, § 3, 40 Stat. 1348, which authorizes the President to requisition storage facilities for wheat, provides, in the words of § 10 of the Lever Act, that "jurisdiction is hereby conferred on the United States district courts to hear and determine all such controversies." And § 2 of the Act of July 11, 1918, c. 145, 40 Stat. 898, permits suits against the United States on marine insurance "in the district court of the United States, sitting in admiralty."

A survey of the war legislation permitting the seizure of property discloses that Congress has established three distinct jurisdictions for the purpose of suit against the

United States for compensation. In seventeen instances [1] it definitely provided by reference to the appropriate sections of the Judicial Code for concurrent jurisdiction in the Court of Claims and the District Courts sitting as a court of claims. In the four instances above set forth it conferred jurisdiction only on the District Courts. In four instances it conferred jurisdiction only on the Court of Claims.[2] The established rule of statutory construction should lead us to give effect in every practicable manner to the distinctions which Congress has seen fit to make. Compare *Penn Mutual Life Insurance Co.* v. *Lederer*, 252 U. S. 523, 533. And where it designates a

---

[1] Statutes which provide for suits for compensation against the United States in both the District Courts and the Court of Claims in the manner provided by § 24, par. 20, and § 145 of the Judicial Code: Act of March 4, 1917, c. 180, 39 Stat. 1193, The Naval Emergency Fund Act;—Act of June 15, 1917, c. 29, 40 Stat. 183, Emergency Shipping Fund Act;—Act of August 10, 1917, c. 53, §§ 12, 16, 25, 40 Stat. 279, 282, 285;—Act of October 6, 1917, c. 79, 40 Stat. 353, 371-2, Land for ordnance proving ground and for naval construction;—Act of March 1, 1918, c. 19, 40 Stat. 438, 439, Shipping Board Housing;—Act of April 22, 1918, c. 62, 40 Stat. 535, Shipping Board trolleys or interurban railways;—Act of April 26, 1918, c. 64, 40 Stat. 537, 538, Land for ordnance proving ground;—Act of May 16, 1918, c. 74, § 2, 40 Stat. 551, Land for war housing;—Act of July 1, 1918, c. 114, § 5, par. d, 40 Stat. 720, Contracts for ships, war materials, factories, etc.;—Act of July 8, 1918, c. 139, § 1, 40 Stat. 826, Buildings for War Department in D. C.; —Joint Res. of July 16, 1918, c. 154, 40 Stat. 904, Telegraph systems;—Act of July 18, 1918, c. 157, § 14, 40 Stat. 916, Dry docks, wharves, warehouses, terminals;—Act of October 5, 1918, c. 181, § 3, 40 Stat. 1010, Minerals, ores, mines, smelters, etc.;—Act of November 21, 1918, c. 212, § 1, 40 Stat. 1048, Buildings for Department of Agriculture in D. C.

[2] Statutes which provide for suits for compensation against the United States only in the Court of Claims: Act of October 6, 1917, c. 106, § 10, 40 Stat. 422, Patents;—Act of July 1, 1918, c. 114, 40 Stat. 705, Patents used by United States;—Act of March 21, 1918, c. 25, § 3, 40 Stat. 454, Railroads;—Act of March 2, 1919, c. 94, § 2, 40 Stat. 1273, War contracts, etc.

jurisdiction in which the trial will be with a jury instead of one where the trial will be by the court alone, it is our duty to give effect to its designation.

The writ of error is dismissed for want of jurisdiction in this court.

Dismissed.

MISSOURI PACIFIC RAILROAD COMPANY ET AL. *v.* AULT.

ERROR TO THE SUPREME COURT OF THE STATE OF ARKANSAS.

No. 252. Argued March 22, 1921.—Decided June 1, 1921.

1. A railroad corporation is not liable, either at common law or under § 10 of the Federal Control Act, upon a cause of action (in this case for wages), arising out of the operation of its railroad by the Government, through the Director General of Railroads. P. 557.
2. Under § 10 of the Federal Control Act, if the cause of action arose prior to government control, suit might be instituted or continued to judgment against the owner-company as though there had been no taking over by the Government, save for the immunity of the physical property from levy and the power of the President to regulate suits in the public interest: if it arose during government operation, the "carrier while under Federal control," meaning in this connection the transportation system as distinguished from its corporate owner, was still liable and, by legal implication, suit could be brought against the Government, or its operating agency, as the legal person responsible under the existing law for such carrier's acts. P. 561.
3. The order of the Director General of Railroads providing that suits on causes of action arising from the operation of any carrier during government control should be brought against him, and for his substitution as defendant in pending suits of that class brought against the carrier companies, was within his authority. P. 561.
4. The clause of § 10 of the Federal Control Act declaring that the carriers "shall be subject to all laws and liabilities as common carriers, whether arising under State or Federal laws or at common

law," and the provision of § 15 that the "lawful police regulations of the several States" shall continue unimpaired, do not permit an action against the Director General to recover a penalty. P. 563.

5. In an action against the Director General of Railroads, the determination whether the liability imposed by a state statute is in the nature of compensation or penalty requires the application of federal law and not state law; and the decision of the highest court of a State imposing a penalty is reviewable in this court on writ of error. P. 564.

140 Arkansas, 572, reversed; petition for writ of certiorari denied.

ERROR to review a judgment of the Supreme Court of Arkansas, affirming a judgment against the plaintiffs in error in an action to recover wages and a penalty. The facts are stated in the opinion.

Mr. Robert E. Wiley, with whom *Mr. Edgar B. Kinsworthy* was on the briefs, for plaintiffs in error.

Mr. Frank Pace, for defendant in error, submitted. *Mr. D. D. Glover* and *Mr. Jabez M. Smith* were also on the brief.

MR. JUSTICE BRANDEIS delivered the opinion of the court.

A statute of Arkansas provides that whenever a railroad company, or a receiver operating a railroad, shall discharge an employee, with or without cause, it shall pay him his full wages within seven days thereafter and that if payment is not duly made "then as a penalty for such nonpayment the wages of such servant or employee shall continue from the date of the discharge or refusal to further employ, at the same rate until paid." Kirby's Digest, § 6649, as amended by Act of 1905, No. 210. Proceeding under this statute, in August, 1918, Ault brought suit before a justice of the peace against the

Missouri Pacific Railroad Company, alleging that he had been employed by the company at the rate of $2.50 per day, that he had been discharged on July 29, 1918, and that $50 was then due him as wages but had not been paid. He recovered judgment by default. The company appealed to the Circuit Court and there moved, in January, 1919, to substitute as defendant the Director General of Railroads. This substitution the court refused to make; but it joined the Director General as defendant and entered judgment against both him and the company upon a verdict that Ault recover the sum of $50 as debt and $390 as penalty. That judgment was affirmed by the Supreme Court of Arkansas. 140 Arkansas, 572.

The President had taken possession and control of the Missouri Pacific Railroad on December 28, 1917, pursuant to the Proclamation of December 26, 1917, 40 Stat. 1733, under the Act of August 29, 1916, c. 418, 39 Stat. 619, 645.[1] He was operating it through the Director General under the Federal Control Act (March 21, 1918, c. 25, 40 Stat. 451) when Ault was employed, when he was discharged and when the judgment under review was entered. See Transportation Act 1920, Act of February 28, 1920, c. 91, 41 Stat. 456. The company had claimed seasonably that under the acts of Congress it could not be held liable either for the wages or the penalty and that, if the state and federal statutes should be construed as creating such liability, they were in that respect void as to it under the Federal Constitution. The Director General did not contest liability for wages actually due,

[1] "The President, in time of war, is empowered, through the Secretary of War, to take possession and assume control of any system or systems of transportation, or any part thereof, and to utilize the same, to the exclusion as far as may be necessary of all other traffic thereon, for the transfer or transportation of troops, war material and equipment, or for such other purposes connected with the emergency as may be needful or desirable." (39 Stat. 645.)

but claimed that under the legislation of Congress he was not liable for the penalty and that the state statute as applied to him was void under the Federal Constitution. The claims of both defendants having been denied by the highest court of the State, they brought the case here by writ of error.

First. The company is clearly not answerable in the present action if the ordinary principles of common-law liability are to be applied. The Railroad Administration established by the President in December, 1917, did not exercise its control through supervision of the owner-companies, but by means of a Director General through "one control, one administration, one power for the accomplishment of the one purpose, the complete possession by governmental authority to replace for the period provided the private ownership theretofore existing." *Northern Pacific Ry. Co.* v. *North Dakota,* 250 U. S. 135, 148. This authority was confirmed by the Federal Control Act of March 21, 1918, c. 25, 40 Stat. 451, and the ensuing Proclamation of March 29, 1918, 40 Stat. 1763. By the establishment of the Railroad Administration and subsequent orders of the Director General, the carrier companies were completely separated from the control and management of their systems. Managing officials were "required to sever their relations with the particular companies and to become exclusive representatives of the United States Railroad Administration." U. S. R. R. Adm., Bulletin No. 4, pp. 113, 114, 313. The railway employees were under its direction and were in no way controlled by their former employers. See Bulletin No. 4, p. 168, § 5; 198, *et seq.;* 330, *et seq.* It is obvious, therefore, that no liability arising out of the operation of these systems was imposed by the common law upon the owner-companies as their interest in and control over the systems were completely suspended.

The contention that the company is liable for acts or

omissions of the Director General in operating the Missouri Pacific Railroad rests wholly upon the following provision of § 10 of the Federal Control Act: [1]

"That carriers while under Federal control shall be subject to all laws and liabilities as common carriers, whether arising under State or Federal laws or at common law, except in so far as may be inconsistent with the provisions of this Act or any other act applicable to such Federal control or with any order of the President. Actions at law or suits in equity may be brought by and against such carriers and judgments rendered as now provided by law; and in any action at law or suit in equity against the carrier, no defense shall be made thereto upon the ground that the carrier is an instrumentality or agency of the Federal Government. . . . But no process, mesne or final, shall be levied against any property under such Federal control."

It is urged that, since § 10, in terms, continues the liability of "carriers while under Federal control" and permits suit against them, it should be construed as subjecting the companies to liability for acts or omissions of the Railroad Administration although they are deprived of all power over the properties and the personnel. And it is said that this construction would not result in hardship upon the companies since the just compensation provided by the act would include any loss from judg-

---

[1] The provision in § 10 concerning suits is in substance the same as that contained in the following paragraph of the Proclamation of the President of December 26, 1917:

"Except with the prior written assent of said Director, no attachment by mesne process or on execution shall be levied on or against any of the property used by any of said transportation systems in the conduct of their business as common carriers; but suits may be brought by and against said carriers and judgments rendered as hitherto until and except so far as said Director may, by general or special orders, otherwise determine."

ments of this sort. Such a radical departure from the established concepts of legal liability would at least approach the verge of constitutional power. It should not be made in the absence of compelling language. *United States* v. *Delaware & Hudson Co.*, 213 U. S. 366, 408. There is none such here.

The plain purpose of the above provision was to preserve to the general public the rights and remedies against common carriers which it enjoyed at the time the railroads were taken over by the President except in so far as such rights or remedies might interfere with the needs of federal operation. The provision applies equally to cases where suits against the carrier companies were pending in the courts on December 28, 1917; to cases where the cause of action arose before that date and the suit against the company was filed after it; and to cases where both cause of action and suit had arisen or might arise during federal operation. The Government was to operate the carriers, but the usual immunity of the sovereign from legal liability was not to prevent the enforcement of liabilities ordinarily incident to the operation of carriers. The situation was analogous to that which would exist if there were a general receivership of each transportation system. Operation was to be continued as theretofore with the old personnel, subject to change by executive order. The courts were to go on entertaining suits and entering judgments under existing law, but the property in the hands of the President for war purposes was not to be disturbed. With that exception the substantial legal rights of persons having dealings with the carriers were not to be affected by the change of control.

This purpose Congress accomplished by providing that "carriers while under federal control" should remain subject to all then existing laws and liabilities and that they might sue and be sued as theretofore. Here the term "carriers" was used as it is understood in common

speech; meaning the transportation systems as distinguished from the corporations owning or operating them. Congress had in § 1 declared that such was its meaning. The President took over the physical properties, the transportation systems, and placed them under a single directing head; but he took them over as entities and they were always dealt with as such. Bull. No. 4, p. 113. Each system was required to file its own tariffs. General Order No. 7, Bull. 4, p. 151. Each was required to take an inventory of its materials and supplies. General Order No. 10, *id.* p. 170. Each federal treasurer was to deal with the finances of a single system; his bank account was to be designated "(Name of Railroad), Federal Account." General Order No. 37, *id.* p. 313. Each of 165 systems was named individually in the order promulgating the wage awards of the Railroad Wage Commission. General Order No. 27, *id.* pp. 198, 200. And throughout the orders and circulars there are many such expressions as "two or more railroads or boat lines under federal control." See General Order No. 11, *id.* p. 170.[1] It is this conception of a transportation system as an entity which dominates § 10 of the act. The systems are regarded much as ships are regarded in admiralty. They are dealt with as active responsible parties answerable for their own wrongs. But since levy or execution upon their property was precluded as inconsistent with the Government's needs, the liability of the transportation

[1] By § 12 of the act receipts from the operation of each carrier are the property of the United States and, unless otherwise directed by the President, they are to be kept in the custody of the same officers and accounted for in the same way as before federal control. Disbursements are to be made from this fund without appropriation in the manner provided by the accounting regulations of the Interstate Commerce Commission. Under those regulations judgments for damages are chargeable to the operation of the railroad and are payable out of the general receipts.

system was to be enforced by allowing suit to be brought against whoever, as the party operating the same, was legally responsible under existing law, although it were the Government.

Thus, under § 10, if the cause of action arose prior to government control, suit might be instituted or continued to judgment against the company as though there had been no taking over by the Government, save for the immunity of the physical property from levy and the power of the President to regulate suits in the public interest as by fixing the venue, or the time for trial.[1] If the cause of action arose while the Government was operating the system the "carrier while under Federal control" was nevertheless to be liable and suable. This means, as a matter of law, that the Government or its agency for operation could be sued, for under the existing law the legal person in control of the carrier was responsible for its acts. See *Gracie* v. *Palmer*, 8 Wheat. 605, 632–633. The title by which suit should be brought—the person who should be named as defendant—was not designated in the act. In the absence of explicit direction, it was perhaps natural that those wishing to sue the carrier should have named the company as defendant when they sought to hold the Government liable. It doubtless seemed, as suggested in *McNulta* v. *Lochridge*, 141 U. S. 327, 331–332, that suit should be brought against the transportation company "by name 'in the hands of,' or 'in the possession of,' a receiver," or Director General. All doubt as to how suit should be brought was cleared

---

[1] *Muir* v. *Louisville & Nashville R. R. Co.*, 247 Fed. Rep. 888; *Wainwright* v. *Pennsylvania R. R. Co.*, 253 Fed. Rep. 459; *Di Tommaso* v. *Lehigh & New England R. R. Co.*, 28 Pa. Dist. 473; *Bolton* v. *Hines*, 143 Ark. 601; *Le Clair* v. *Montpelier & Wells River R. R. Co.*, 93 Vt. 92; *Benjamin Moore & Co.* v. *Atchison, Topeka & Santa Fe Ry. Co.*, 174 N. Y. S. 60; *Special Rules of Practice During Federal Control*, 50 I. C. C. 797, 798.

away by General Order No. 50, which required that it be against the Director General by name.[1]

As the Federal Control Act did not impose any liability upon the companies on any cause of action arising out of the operation of their systems of transportation by the Government, the provision in Order No. 50, authorizing the substitution of the Director General as defendant in suits then pending was within his power; the application of the Missouri Pacific Railroad Company that it be dismissed from this action should have been granted; and the judgment against it should, therefore, be reversed.[2]

---

[1] "*It is therefore* ordered, that actions at law, suits in equity, and proceedings in admiralty hereafter brought in any court based on contract, binding upon the Director General of Railroads, claim for death or injury to person, or for loss and damage to property, arising since December 31, 1917, and growing out of the possession, use, control, or operation of any railroad or system of transportation by the Director General of Railroads, which action, suit, or proceeding but for Federal control might have been brought against the carrier company, shall be brought against William G. McAdoo, Director General of Railroads, and not otherwise; provided, however, that this order shall not apply to actions, suits or proceedings for the recovery of fines, penalties and forfeitures. . . .

"The pleadings in all such actions at law, suits in equity, or proceedings in admiralty, now pending against any carrier company for a cause of action arising since December 31, 1917, based upon a cause of action arising from or out of the operation of any railroad or other carrier, may on application be amended by substituting the Director General of Railroads for the carrier company as party defendant and dismissing the company therefrom."

[2] The great weight of authority in the federal courts is in favor of this view. See *Rutherford* v. *Union Pacific R. R. Co.*, 254 Fed. Rep. 880; *Dahn* v. *McAdoo*, 256 Fed. Rep. 549; 267 Fed. Rep. 105; *Mardis* v. *Hines*, 258 Fed. Rep. 945; 267 Fed. Rep. 171; *Hatcher & Snyder* v. *Atchison, Topeka & Santa Fe Ry. Co.*, 258 Fed. Rep. 952; *Haubert* v. *Baltimore & Ohio R. R. Co.*, 259 Fed. Rep. 361; *Nash* v. *Southern Pacific Co.*, 260 Fed. Rep. 280; *Westbrook* v. *Director General*, 263 Fed. Rep. 211; *Blevins* v. *Hines*, 264 Fed. Rep. 1005; *Erie R. R. Co.* v. *Caldwell*,

Second. The contention that the Director General, being the carrier, is liable for the penalty imposed by the Arkansas statute is rested specifically upon the clause in § 10 to the effect that the carriers "shall be subject to all laws and liabilities as common carriers, whether arising under State or Federal laws or at common law," and the provision in § 15 that the "lawful police regulations of the several States" shall continue unimpaired. By these provisions the United States submitted itself to the various laws, state and federal, which prescribe how the duty of a common carrier by railroad should be performed and what should be the remedy for failure to perform. By these laws the validity and extent of claims against the United States arising out of the operation of the railroad were to be determined. But there is nothing either in the purpose or the letter of these clauses to indicate that Congress intended to authorize suit against the Government for a penalty, if it should fail to perform the legal obligations imposed. The Government undertook as carrier to observe all existing laws; it undertook to compensate any person injured through a departure by its agents or servants from their duty under such law; but it did not undertake to punish itself for any departure by the imposition upon itself of fines and penalties or to permit any other sovereignty to punish it. Congress is

---

264 Fed. Rep. 947; *Pullman Co.* v. *Sweeney*, 269 Fed. Rep. 764; *Hines* v. *Smith*, 270 Fed. Rep. 132. Contra, *Jensen* v. *Lehigh Valley R. R. Co.*, 255 Fed. Rep. 795; *Johnson* v. *McAdoo*, 257 Fed. Rep. 757; *Dampskibs* v. *Hustis*, 257 Fed. Rep. 862; *The Catawissa*, 257 Fed. Rep. 863.

The cases in the state courts show a considerable diversity of view. See *Commonwealth* v. *Louisville & Nashville R. R. Co.*, 189 Ky. 309; *McGrath* v. *Northern Pacific Ry. Co.*, 177 N. W. Rep. (N. D.) 383; *Peacock* v. *Detroit, G. H. & M. Ry. Co.*, 208 Mich. 403; *Castle* v. *Southern Ry. Co.*, 112 S. Car. 407; *Robinson* v. *Central of Georgia Ry. Co.*, 150 Ga. 41; *Galveston, H. & S. A. Ry. Co.* v. *Wurzbach*, 219 S. W. Rep. (Tex.) 252. Contra, *Mobile & Ohio R. R. Co.* v. *Jobe*, 122 Miss. 696; *Ringquist* v. *Duluth, M. & N. Ry. Co.*, 145 Minnesota, 147.

not to be assumed to have adopted the method of fines paid out of public funds to insure obedience to the law on the part of the Government's railway employees. The Director General adopted a much more effective and direct method: "Now that the railroads are in the possession and control of the Government, it would be futile to impose fines for violations for said laws and orders upon the Government, therefore it will become the duty of the Director General in the enforcement of said laws and orders to impose punishment for willful and inexcusable violations thereof upon the person or persons responsible therefor." General Order No. 8, *id.* p. 167.

The purpose for which the Government permitted itself to be sued was compensation, not punishment. In issuing General Order No. 50, the Director General was careful to confine the order to the limits set by the act, by concluding the first paragraph of the order, "provided, however, that this order shall not apply to actions, suits, or proceedings for the recovery of fines, penalties, and forfeitures." Wherever the law permitted compensatory damages they may be collected against the carrier while under federal control. Such damages may reasonably include interest and costs. See *Hines* v. *Taylor*, 79 Florida, 218. But double damages, penalties and forfeitures, which do not merely compensate but punish, are not within the purview of the statute. See *Hines* v. *Taylor*, *supra*; *Jackson-Tweed Lumber Co.* v. *Southern Ry. Co.*, 113 S. Car. 236. The amount recovered in the present case over and above the wages due and unpaid with interest is in the nature of a punishment. It is called a penalty in the state statute. The Supreme Court of Arkansas had held that it was not technically a penalty, declaring: "It is allowed for a double purpose, as a compensation for the delay, and as a punishment for the failure to pay. It is composed of all the elements

and serves all the purposes of exemplary damages." *Leep* v. *Railway Co.*, 58 Arkansas, 407, 440–441. But whether in a proceeding against the Director General it shall be deemed compensation or a penalty presents a question not of state, but of federal law. Whatever name be applied, the element of punishment clearly predominates and Congress has not given its consent that suits of this character be brought against the United States. The judgment against the Director General, so far as it provided for recovery of the penalty, was erroneous.

The case is properly here on writ of error. The petition for writ of certiorari, consideration of which was postponed to the hearing on the merits, is therefore denied.

Judgment reversed.

NORFOLK-SOUTHERN RAILROAD COMPANY v. OWENS.

CERTIORARI TO THE SUPREME COURT OF THE STATE OF NORTH CAROLINA.

No. 223. Argued March 17, 1921.—Decided June 1, 1921.

A railroad corporation, while its road was under federal control, was not liable for a penalty prescribed by a state law, for delay in delivery of an intrastate shipment. *Missouri Pacific R. R. Co.* v. *Ault*, *ante*, 554.

178 N. Car. 325, reversed.

THE case is stated in the opinion.

Mr. W. B. Rodman, Jr., for petitioner.

No appearance for respondent.

MR. JUSTICE BRANDEIS delivered the opinion of the court.

This case comes here on writ of certiorari (251 U. S. 550) to the Supreme Court of North Carolina, which affirmed (178 N. Car. 325) a judgment of $21 against the Norfolk-Southern Railroad Company in favor of Owens, a shipper. The amount was assessed under a statute of the State as a penalty for undue delay in making delivery of an intrastate shipment made March 27, 1918. At that time the railroad was in the possession and control of the Government, and was being operated by the Director General under the Federal Control Act of March 21, 1918, c. 25, 40 Stat. 451. The only question presented for decision is whether the company was liable for the penalty. We are of opinion that it was not, for the reasons stated in *Missouri Pacific R. R. Co.* v. *Ault*, decided this day, *ante*, 554.

Reversed.

WESTERN UNION TELEGRAPH COMPANY *v.* ESTEVE BROTHERS & COMPANY

CERTIORARI TO THE CIRCUIT COURT OF APPEALS FOR THE FIFTH CIRCUIT.

No. 491. Argued April 12, 13, 1921.—Decided June 1, 1921.

A company engaged in transmitting telegraphic messages in this country and by cable between here and France, established a tariff offering a lower rate for unrepeated and a higher rate for repeated messages, and limiting its liability for mistakes in transmitting unrepeated messages to the tolls accruing to it therefrom, and filed the tariff with the Interstate Commerce Commission under the Interstate Commerce Act, as amended June 18, 1910, c. 309, § 7, 36 Stat. 539; an unrepeated message sent by plaintiffs from Spain passed over other lines to Havre, where it was received by the com-

pany and sent to New Orleans, an error being introduced on the land lines in this country which caused the plaintiffs heavy loss. The provision limiting liability was not expressed on the blank used in sending; nor did the senders know of its adoption and filing. *Held:*

1. Whatever the legal incidents of the transmission over the foreign lines, the company in carrying the message over its own lines from Havre was governed by the Interstate Commerce Act, as amended. P. 570.
2. The senders of the message were bound as a matter of law by the provision limiting liability, without regard to their knowledge or assent, because it was a part of a lawfully established rate which could not be departed from without creating an undue preference or advantage in violation of § 3 of the statute. P. 570. *Boston & Maine Railroad* v. *Hooker*, 233 U. S. 97; *Galveston, Harrisburg & San Antonio Ry. Co.* v. *Woodbury*, 254 U. S. 357.
3. *Quære*, Whether the rule that carriers of goods, in order to limit liability for negligence, must offer an alternative rate attended by full liability, (*Union Pacific R. R. Co.* v. *Burke*, 255 U. S. 317), applies to telegraph and cable companies? P. 574.
4. Where a cable company offered a lower rate, with limited liability, for unrepeated messages, and a higher rate for repeated messages, with a higher but still limited liability, *held*, that the senders of an unrepeated message who paid the lower rate could not escape its attendant limitation upon the ground that liability under the higher was also limited, since the latter limitation, if invalid, would not bind those who used the higher rate, and the question of its validity was not material in the case. P. 575.

268 Fed. Rep. 22, reversed.

CERTIORARI to review a judgment of the Circuit Court of Appeals affirming a judgment rendered against the present petitioner, by the District Court, in an action for damages resulting from a mistake in a telegram. The facts are stated in the opinion.

Mr. Rush Taggart and *Mr. John G. Milburn*, with whom *Mr. Francis Raymond Stark*, *Mr. Joseph L. Egan* and *Mr. W. B. Spencer* were on the brief, for petitioner.

Mr. Monte M. Lemann, with whom *Mr. J. Blanc Monroe* was on the brief, for respondent.

MR. JUSTICE BRANDEIS delivered the opinion of the court.

In September, 1917, the Western Union Telegraph Company delivered to Esteve Brothers & Company at New Orleans, Louisiana, an unrepeated cable message from the latter's main office at Barcelona, Spain, directing a sale for future delivery of two thousand bales of cotton. The message actually sent had directed the sale of two hundred bales. The error in transmission resulted in a loss to Esteve Brothers & Company of $31,095. To recover compensation for this loss they sued the Western Union in a state court of Louisiana. The case was removed to the Federal District Court and there was tried by jury upon these additional stipulated facts:

The message was sent over lines of the Spanish Government Telegraph from Barcelona to Paris and thence over lines of the French Government to Havre. There it was delivered to the Western Union, transmitted by its cable to New York City and thence over its land lines to New Orleans. The error in transmission occurred on these land lines. The charge of $6.60, paid at Barcelona for transmitting the message, represented the sum of the local rates on the several connecting lines. The Western Union's share was $4.65; and of this $3.75 was apportioned to the cable system and 90 cents to the land lines. This Western Union rate was established by its tariff of telegraph and cable rates, in force since some time prior to June 18, 1910. Under the act of that date, c. 309, 36 Stat. 544, making telegraph and cable companies subject to the Act to Regulate Commerce, this tariff had been filed with the Interstate Commerce Commission in May, 1916, by its permission and pursuant to an appropriate resolution of the company. The tariff so filed embodied the long used classification of messages, rules and regulations, including the provision that the company "shall not

be liable for mistakes . . . in transmission . . . of any unrepeated message, beyond the amount of that portion of the tolls which shall accrue to it." The plaintiffs did not in fact assent to this limitation of liability. They did not, in sending the message at Barcelona, use a blank containing the provisions so limiting liability. They did not have actual knowledge of the resolution of the company or of the filing of the tariffs with the Interstate Commerce Commission.

The plaintiffs contended at the trial that in view of the above facts they were entitled to a verdict for the full amount of their loss. The company contended that, since the message had not been repeated, the verdict should be limited to $4.65, the amount received by it as tolls. A verdict was directed for $31,095 with interest; judgment thereon was affirmed by the United States Circuit Court of Appeals for the Fifth Circuit, 268 Fed. Rep. 22; and a petition for writ of certiorari was granted. 254 U. S. 624. The sole question presented for our decision is the amount of damages recoverable.

For more than fifty years prior to the transaction here in suit the Western Union had maintained these two classes of rates for general cable and telegraph service. The usual or basic rate was for service practically at the sender's risk, liability being limited to the amount of the toll collected. Another special rate entitled the sender to have the message repeated back to the point of origin and rendered the company liable in case of mistake or nondelivery up to fifty times the amount of the extra charge. The extra charge for this additional service was for telegrams one-half and for cables one-quarter of the basic rate. In *Primrose* v. *Western Union Telegraph Co.*, 154 U. S. 1, decided in 1894, this classification of rates and the limitations upon the company's liability were declared by this court to be reasonable and valid, in the absence of willful misconduct or gross negligence. The

limitation upon the company's common-law liability was held to be in the nature of contract; and this liability unlike that of a common carrier, was not an insurer's. It was merely for the damage flowing from failure to use due care in transmission. *Primrose* v. *Western Union Telegraph Co., supra,* 14. Since the limitation of liability was in the nature of contract, the provision had to be brought home to the sender of a message in order to be legally binding upon him. Assent by the sender was ordinarily established if the message was written upon one of the company's blanks which set forth the limitation of liability. *Primrose* v. *Western Union Telegraph Co., supra,* 25; compare *Cau* v. *Texas & Pacific Ry. Co.,* 194 U. S. 427, 431. Whether, in view of long established practice, the mere sending of a message, although not written on such a blank, imported assent to the usual terms of the rate involved then an issue of fact. See *New Jersey Navigation Co.* v. *Merchants' Bank,* 6 How. 344, 383. The question presented for our decision is whether since the amendment of June 18, 1910, to the Act to Regulate Commerce, the sender is, without assent in fact, bound as matter of law by the provision limiting liability, because it is a part of the lawfully established rate.

The Act of June 18, 1910, c. 309, § 7, 36 Stat. 539, 544, broadened the scope of the Act to Regulate Commerce to include "telegraph, telephone, and cable companies (whether wire or wireless) engaged in sending messages from [a] State . . . to any foreign country." And whatever may have been the legal incidents of transmitting the message from Barcelona to Havre under Spanish and French law, the Western Union in sending the message over its own lines from Havre to New Orleans was governed by the provisions of that act. *Galveston, Harrisburg & San Antonio Ry. Co.* v. *Woodbury,* 254 U. S. 357. In the third paragraph of § 1 of the amended act Congress provided that messages might be "classified

into day, night, repeated, unrepeated, letter, commercial, press, Government, and such other classes as are just and reasonable, and different rates [might] be charged for the different classes of messages." Acting, in May, 1916, under the authority of that provision, the Western Union by appropriate action approved the tariff involved in the present case and by permission of the Interstate Commerce Commission filed with it the tariff, including the provisions here in question. The company was not required so to do by the terms of the act or by any order of the Commission; compare 25th Annual Report I. C. C. (1911) pp. 5, 6. But the rate, long before established, then formally adopted and filed, was thereafter the only lawful rate for an unrepeated message, and the limitation of liability became the lawful condition upon which it was sent. *Postal Telegraph-Cable Co.* v. *Warren-Godwin Lumber Co.*, 251 U. S. 27, 30; *Clay County Produce Co.* v. *Western Union Telegraph Co.*, 44 I. C. C. 670, 674.

The lawful rate having been established, the company was by the provisions of § 3 of the Act to Regulate Commerce prohibited from granting to anyone an undue preference or advantage over the public generally. For, as stated in *Postal Telegraph-Cable Co.* v. *Warren-Godwin Lumber Co.*, *supra*, 30, the "Act of 1910 was designed to and did subject such companies as to their interstate business to the rule of equality and uniformity of rates." If the general public upon paying the rate for an unrepeated message accepted substantially the risk of error involved in transmitting the message, the company could not, without granting an undue preference or advantage extend different treatment to the plaintiffs here. The limitation of liability was an inherent part of the rate. The company could no more depart from it than it could depart from the amount charged for the service rendered.

The Act of 1910 introduced a new principle into the legal relations of the telegraph companies with their

patrons which dominated and modified the principles previously governing them. Before the act the companies had a common-law liability from which they might or might not extricate themselves according to views of policy prevailing in the several States. Thereafter, for all messages sent in interstate or foreign commerce, the outstanding consideration became that of uniformity and equality of rates. Uniformity demanded that the rate represent the whole duty and the whole liability of the company. It could not be varied by agreement; still less could it be varied by lack of agreement. The rate became, not as before a matter of contract by which a legal liability could be modified, but a matter of law by which a uniform liability was imposed. Assent to the terms of the rate was rendered immaterial, because when the rate is used, dissent is without effect. This principle was established in cases involving the limitation upon a carrier's liability for baggage by *Boston & Maine Railroad* v. *Hooker*, 233 U. S. 97, and *Galveston, Harrisburg & San Antonio Ry. Co.* v. *Woodbury*, 254 U. S. 357. In the former case it was said, "If the charges filed were unreasonable, the only attack that could be made upon such regulation [limiting liability] would be by proceedings contesting their reasonableness before the Interstate Commerce Commission. While they were in force they were equally binding upon the railroad company and all passengers whose baggage was transported by carriers in interstate commerce." So here the limitation of liability attached to the unrepeated cable rate is binding upon all who send messages to or from foreign countries until it is set aside as unreasonable by the Commission.

It is strongly argued that the rule is not applicable to the situation before us, because of the difference in the provisions of law which govern the establishment of railroad and of telegraph rates. The railroad rate is established, and can only be established by filing the tariff with

the Commission. Telegraph companies may initiate rates without filing tariffs with the Commission, (*Clay County Produce Co.* v. *Western Union Telegraph Co.*, *supra*). Plaintiffs insist that it is the filing and subsequent publication of the railroad rate which gives it the force of law and requires the shipper to take notice of it. But the contention, by dwelling unduly upon the procedural features of the act, would defeat the end which Congress had in view. Both railroad and telegraph-cable rates are initiated by the carrier. It is true that a railroad rate does not have the force of law unless it is filed with the Commission. But it is not true that out of the filing of the rate grows the rule of law by which the terms of this lawful rate conclude the passenger. The rule does not rest upon the fiction of constructive notice. It flows from the requirement of equality and uniformity of rates laid down in § 3 of the Act to Regulate Commerce. Since any deviation from the lawful rate would involve either an undue preference or an unjust discrimination, a rate lawfully established must apply equally to all, whether there is knowledge of it or not. Congress apparently concluded, in the light of discrimination theretofore practiced by railroads among shippers and localities, that in transportation by rail equality could be secured only by provisions involving the utmost definiteness and constant official supervision. Accordingly by § 6 it forbade a carrier of goods from engaging in transportation unless its rates had been filed with the Commission; and it prohibited, under heavy penalties, departure in any way from the terms of those rates when filed. In the case of telegraph and cable companies Congress appears to have considered that such stringent provisions were not required to secure the end in view. It did not make filing with the Commission a condition precedent to the existence of a lawful telegraph and cable rate. When, therefore, the Western Union initiated and established this

reasonable rate, the principle of equality and uniformity laid down in § 3 required that it should have exactly the same force and effect as the rate initiated by a rail carrier and filed according to the provisions of § 6.

It was suggested that the attempted limitation of liability must fail under the rule recently applied in *Union Pacific R. R. Co.* v. *Burke*, 255 U. S. 317; because both the alternative rates offered in the Western Union tariff for cable messages were for limited liability, and because, therefore, no offer was made to the sender of a rate under which the company would assume full liability for all losses suffered through its negligence. It is by no means clear that the rule of the *Burke Case*—established for common carriers of goods—should be applied to telegraph and cable companies. See the *Primrose Case*, *supra*, p. 14. In any event, it is not applicable here. The Western Union did not, as in the case of telegrams, offer to send cable messages upon a special valuation to be made by the sender and paid for by an extra charge "based on such value equal to one-tenth of one per cent. thereof." But it offered alternative rates for repeated and for unrepeated cable messages. This long-established classification was expressly recognized as just and reasonable for cable as well as for telegraph messages in the amendment made by the Act of June 18, 1910, to § 1 of the Act to Regulate Commerce. The provision in the terms offered by the company is:

"To guard against mistakes or delays the sender of a cable message should order it repeated, that is, telegraphed back to the originating office for comparison. For this, one-quarter of the unrepeated cable message rate is charged in addition. Unless otherwise indicated on its face this is an unrepeated cable message and paid for as such.

". . . this company shall not be liable for mistakes or delays in transmission or delivery . . . of any un-

repeated message, beyond the amount of that portion of the tolls which shall accrue to this company; . . . [nor] of any repeated message, beyond fifty times the extra sum received by this company from the sender for repeating such message over its own lines. . . ."

The repeated rate, offering greater accuracy and greater liability in case of error, was open to anyone who wished to pay the extra amount for extra security. Whether the limitation of liability prescribed for the repeated message would be valid as against a sender who had endeavored, by having the message repeated, to secure the greatest care on the part of the company, we have no occasion to decide, because it is not raised by the facts before us. It is enough to sustain the limitation of liability attached to the unrepeated rate that another special rate was offered for messages of value and importance, and not availed of. The fact that the alternative rate had tied to it a provision which, if tested, might be found to be void, is not material in a case where no effort was made to take advantage of it.

Reversed.

MR. JUSTICE PITNEY and MR. JUSTICE CLARKE dissent.

SUTTON, TRUSTEE OF ESTATE OF HILLSBORO DREDGING COMPANY, BANKRUPT, v. UNITED STATES.

APPEAL FROM THE COURT OF CLAIMS.

No. 307. Argued April 29, 1921.—Decided June 1, 1921.

1. Acts appropriating specific amounts for the improvement of a navigable channel and for "completing" the improvement, with provision for using the fund in the prosecution of the work if in-

sufficient to complete it, (River and Harbor Act, c. 253, § 8, 37 Stat. 233), do not authorize the Secretary of War to contract to expend more than the amounts appropriated; and his contract to do so would not bind the Government. (Rev. Stats., § 3733; Act of June 30, 1906, c. 3914, § 9, 34 Stat. 764.) P. 578.

2. An appropriation for the preservation and maintenance of existing river and harbor works and for the prosecution of work previously authorized, is not applicable to pay for work theretofore done under and in excess of a prior appropriation, and when so misapplied the amount paid may be deducted from a balance owing the contractor under another contract. P. 579.
3. A contract for dredging and excavating at unit rates specified the materials to be removed at estimated amounts which, if correctly estimated, would have been covered by the appropriation, and provided that Government inspectors should keep a record of the work done, which was to be within the limits of the funds available. Relying upon erroneous estimates of an inspector, the contractor did more work than the appropriation would pay for before the error was discovered and the operations stayed. *Held*, that, there being no authority to contract in excess of the appropriation, no contract of the Government to pay the fair value of the excess work could be implied, either because the contractor was thus misled into doing it or from the subsequent use of the excavation by the Government. P. 580.
4. If, through mistake of the Government's representatives, more work is done, and work is continued for a longer period, than was contracted for or authorized, the cost of Government superintendence incident to the mistake should not be taken from the appropriation at the expense of the contractor. P. 581.

55 Ct. Clms. 193, affirmed with modification.

THE case is stated in the opinion.

Mr. John B. Sutton, with whom *Mr. M. Walton Hendry* was on the brief, for appellant.

Mr. Frank Davis, Jr., Special Assistant to the Attorney General, with whom *Mr. Geo. T. Stormont* and *Mr. Wm. D. Harris* were on the brief, for the United States.

MR. JUSTICE BRANDEIS delivered the opinion of the court.

The River and Harbor Act of July 25, 1912, c. 253, 37 Stat. 201, 209, made this appropriation: "Improving channel from Clearwater Harbor through Boca Ceiga Bay to Tampa Bay, Florida: Completing improvement and for maintenance, twenty thousand dollars." Sealed proposals were solicited, and on January 21, 1913, a contract was made by the War Department with the Hillsboro Dredging Company to do work at unit rates for dredging soft material and for excavating rock. The appropriation was ample to defray the cost at these rates, assuming that the quantities of material to be removed did not greatly exceed the estimates presented by the specifications. It was provided by the contract that United States "inspectors will keep a record of the work done" and also that, "within the limits of available funds the United States reserves the right to require the removal of such yardage as will complete the work . . . be it more or less than the quantity above estimated. . . ."

Work was begun under the contract in June, 1913, and payments were made monthly on estimates of the government inspector. Upon these estimates both the Government and the contractor relied. About May 15, 1914, it was discovered that through a mistake of the inspector so much work had already been done that, if paid for at the unit rates, it would call for an amount far in excess of the appropriation available. The government engineer in charge ordered operations discontinued immediately; and this contractor had no further connection with the work. The work already done amounted at the unit price to $25,032.31. The aggregate appropriation available for the improvement—including an additional $3,000 made by Act of March 4, 1913, c. 144, 37 Stat. 801, 809—was $23,000. Against this appropriation the Gov-

ernment charged $1,732.90 for superintendence and office expenses. The balance—$21,267.10—it paid to the contractor, leaving unsatisfied a claim, at the unit rates, of $3,042.74, for material dredged or excavated, and a further claim of $1,551 for the cost of blasting rock which was not removed because of the order to cease work. To recover these sums the assignee in bankruptcy of the Hillsboro Company brought this suit in the Court of Claims. That court entered judgment for the Government, 55 Ct. Clms. 193; and the case is here on appeal.

First. It is urged that the Secretary of War was authorized by Congress to make, and that he did make, a contract with the Hillsboro Company not only to proceed with the work, but for its completion; and that the United States is, therefore, liable, even though the appropriation proved to be insufficient. Two appropriations had been made for this project before the Act of 1912 above referred to; one by Act of June 25, 1910, c. 382, 36 Stat. 630, 644, of $29,500, for "improving channel from Clearwater Harbor"; the other by Act of February 27, 1911, c. 166, 36 Stat. 933, 941, of a like amount for "completing improvement." The Act of 1912 provided by § 8 (37 Stat. 233) that "whenever the appropriations made, or authorized to be made, for the completion of any river and harbor work shall prove insufficient therefor, the Secretary of War may, in his discretion, on the recommendation of the Chief of Engineers, apply the funds so appropriated or authorized to the prosecution of such work." But by none of these acts was any authority conferred upon the Secretary of War to complete the improvement or to contract to expend more than the amount then appropriated. On the other hand, § 3733 of the Revised Statutes provides that no contract "for any public improvement . . . shall bind the Government to pay a larger sum of money than the amount in the Treasury appropriated for the specific purpose." See

also §§ 3732 and 5503. And the Act of June 30, 1906, c. 3914, provides by § 9 (34 Stat. 697, 764) that "No Act of Congress hereafter passed shall be construed . . . to authorize the execution of a contract involving the payment of money in excess of appropriations made by law, unless such Act shall in specific terms declare an appropriation to be made or that a contract may be executed." The Secretary of War was, therefore, without power to make a contract binding the Government to pay more than the amount appropriated. See *Bradley* v. *United States*, 98 U. S. 104, 113, 114. Those dealing with him must be held to have had notice of the limitations upon his authority. But there is nothing in the contract indicating a purpose to bind the Government for any amount in excess of the appropriation. On the contrary, it limits to the amount of the appropriation the work which may be done.

By Act of October 2, 1914, c. 313, 38 Stat. 725, Congress appropriated the sum of $20,000,000 "to be expended under the direction of the Secretary of War and the supervision of the Chief of Engineers, for the preservation and maintenance of existing river and harbor works, and for the prosecution of such projects heretofore authorized as may be most desirable in the interests of commerce and navigation, and most economical and advantageous in the execution of the work." Out of the sum so appropriated $12,000 was allotted by the Secretary for completing the Clearwater Harbor Improvement; and out of this sum there was paid to the contractor in November, 1914, $3,046.44, being the unpaid balance at unit prices for the material removed prior to May 15, 1914. This payment was later disallowed by the auditor for the War Department and the Comptroller of the Treasury and was deducted from payments made to the contractor under a wholly different contract for work in North and South Carolina. It is clear that the Act of 1914 did not

authorize the application of any part of the appropriation to work theretofore done. The payment therefrom having been unauthorized, did not bind the Government; and if it was entitled to recover the money, the method pursued in doing so was proper. *Wisconsin Central R. R. Co.* v. *United States*, 164 U. S. 190; *Grand Trunk Western Ry. Co.* v. *United States*, 252 U. S. 112.

Second. It is contended that since the contract provided that the government "inspectors will keep a record of the work done," since their estimates were relied upon by the contractor, and since by reason of the inspector's mistake the contractor was led to do work in excess of the appropriation, the United States is liable as upon an implied contract for the fair value of the work performed. But the short answer to this contention is that since no official of the Government could have rendered it liable for this work by an express contract, none can by his acts or omissions create a valid contract implied in fact. The limitation upon the authority to impose contract obligations upon the United States is as applicable to contracts by implication as it is to those expressly made. Nor did the subsequent use of the excavation by the Government imply a promise to pay for it if at any time thereafter Congress should appropriate money to be applied in completing the improvement. "Whenever a structure is permanently affixed to real property belonging to an individual, without his consent or request, he cannot be held responsible because of its subsequent use. It becomes his by being annexed to the soil; and he is not obliged to remove it to escape liability. He is not deemed to have accepted it so as to incur an obligation to pay for it, merely because he has not chosen to tear it down, but has seen fit to use it." *United States* v. *Pacific Railroad*, 120 U. S. 227, 240. And the work here in question was not done with the consent or at the request of the United States; for neither the government inspectors

nor the Secretary of War had authority either to obligate the Government or accept voluntary services. See Rev. Stats., § 3679, as amended March 3, 1905, c. 1484, § 4, 33 Stat. 1257, and February 27, 1906, c. 510, § 3, 34 Stat. 48.

There is no necessity to consider what may be the equitable rule where there is a claim of unjust enrichment through work done upon the land of another under a mistake of fact. See *Bright* v. *Boyd*, 1 Story, 478; 2 Story, 608; *Williams* v. *Gibbes*, 20 How. 535, 538; *Canal Bank* v. *Hudson*, 111 U. S. 66, 82–83; *Armstrong* v. *Ashley*, 204 U. S. 272, 285. Nor need we consider whether the doctrine is ever applicable to transactions with the Government. For the right to sue the United States in the Court of Claims here invoked must rest upon the existence of a contract express or implied in fact. *United States* v. *North American Transportation & Trading Co.*, 253 U. S. 330, 335.

Third. While the contractor cannot recover for work done in excess of the appropriation he is entitled to payment to the extent of the available appropriation. The amount appropriated was $23,000. The contractor received only $21,267.10. It appears that the balance, $1,732.90, was applied to superintendence and office expenses; and the findings of fact state that the contractor "was charged with expenses of inspection during an extension of time beyond the contract period amounting to $722.47." The appropriate expense of superintendence is clearly chargeable against the appropriation. But if through mistake of the Government's representatives more work is done, and work is continued for a longer period than was contracted for or authorized, the expenses of superintendence incident to the mistake should be borne by the Government; and the contractor should not be made to suffer by the depletion of the appropriation. The fund otherwise available for work actually performed should be applied to that purpose.

The findings of fact leave us in doubt whether there has been charged against this appropriation any sum for superintendence in excess of amounts properly chargeable; and counsel were unable to remove these doubts, to which attention was called at the argument. Unless the parties can agree as to the facts, the case should be remanded to the Court of Claims to determine what, if any, amount was erroneously charged against the appropriations aggregating $23,000; and for the amount of such improper charges, if any, judgment should be entered for the petitioner. Except as stated the judgment is *Affirmed.*

DISTRICT OF COLUMBIA *v.* R. P. ANDREWS PAPER COMPANY.

DISTRICT OF COLUMBIA *v.* SAKS & COMPANY.

DISTRICT OF COLUMBIA *v.* LISNER.

CERTIORARI TO THE COURT OF APPEALS OF THE DISTRICT OF COLUMBIA.

Nos. 282–284. Argued April 22, 25, 1921.—Decided June 1, 1921.

1. Permits to build vaults under sidewalks adjacent to their premises were issued to private parties for a nominal charge by the Commissioners of the District of Columbia, subject to the building regulations, which provided, *inter alia*, that no charge should be made the occupants of such vaults, that permits should be revocable when the space was needed for public use or improvements, and that the space should be vacated when ordered by the Commissioners or needed for public use; the permittees signed agreements, as required by these regulations, accepting the permits on conditions recognizing the right of the District to construct sewers, etc., which it might deem necessary, and the duty of vault occupants to clear the space

therefor, without cost to the District, and declaring that the occupation was permitted merely as an accommodation to abutting owners, and that no right, title or interest of the public was in any way waived or abridged, "except as expressed in said permit and the conditions aforesaid." *Held*, that the building regulations were not to be looked to for grants in the streets, and that the permits were to be strictly construed and were mere licenses, revocable by the District Government at its discretion. P. 586.

2. An application made long ago to the District Government for permission to build a vault under a sidewalk, followed by its construction and continuous use, may support a presumption of a license but not of a permanent grant in the street. P. 587.

3. The Act of September 1, 1916, c. 433, § 7, 39 Stat. 716, authorizing and directing assessment and collection of rent from all users of space under sidewalks and streets of the District of Columbia, occupied and used in connection with their business, applies to vaults constructed before as well as those constructed after the date of the act. P. 588.

49 App. D. C. 273, 276; 263 Fed. Rep. 1017, 1020, reversed.

THE cases are stated in the opinion.

Mr. F. H. Stephens for petitioner.

Mr. M. D. Rosenberg and *Mr. Charles L. Frailey*, with whom *Mr. E. H. Jackson* was on the brief, for respondents.

MR. JUSTICE CLARKE delivered the opinion of the court.

These three cases, tried on agreed statements of fact, were argued and will be disposed of together.

The respondents were assessed a rental upon vaults under sidewalks which were used in connection with business conducted in adjacent buildings. They refused to pay the assessments, and, in these suits to collect them, judgments were rendered by the Supreme Court in favor of the District, which were reversed by the Court of Appeals on the ground that the act of Congress authorizing the assessments was applicable only to constructions permitted after its date.

The essential facts are as follows:

The appropriation act for the District of Columbia, approved September 1, 1916, c. 433, § 7, 39 Stat. 676, 716, provided:

"That hereafter the Commissioners of the District of Columbia are authorized and directed to assess and collect rent from all users of space occupied under the sidewalks and streets in the District of Columbia, which said space is occupied or used in connection with the business of said users."

Pursuant to this authority, the Commissioners caused the space occupied by vaults of each of the three respondents to be valued and then assessed against each of them a rental which it is stipulated is "fair and reasonable" in amount "if it be a legal charge."

The permits involved in the Paper Company and Lisner cases were issued before the act complained of was passed and these two cases will be first considered.

The essential provisions of each of these permits are:

"This is to certify that . . . , has permission to build vault . . . as per plan . . . in accordance with application . . . on file in this office, and subject to the provisions of the Building Regulations of the District of Columbia." There is nothing in either permit in the nature of a grant or which enlarges the permission beyond the terms quoted.

When these permits were issued, the Building Regulations provided (paragraph 9):

"No charge will be made for the occupancy of public space by vaults or areas, except the usual permit fee, and all permits for such occupancy are subject to revocation by the Commissioners at any time without compensation, when the vault space is needed for public use or improvements. . . . And this permit is accepted with the understanding that the occupation of the vault space is permitted merely as an accommodation to the owner of

the abutting premises and that no right, title or interest of the public is in any way waived or abridged thereby, except as expressed in said permit and the conditions aforesaid." Then follows an agreement by the licensee to use the vault only for the purposes authorized by the Commissioners.

And paragraph 3 provided:

"The application for a vault must be accompanied by a written agreement, upon an official blank, signed by the owner of the abutting property, . . . contracting to release and relinquish the vault space and to remove, free of expense to the District, all machinery, fixtures, or structural parts of the vault when so ordered by the Commissioners, or needed for public uses." The only charge made by the District was one dollar for the permit to construct.

Pursuant to paragraph 3, *supra*, the applicants each signed an agreement in precisely the same form, accepting the permit on condition (1) that the District shall have the right to construct under, over or through the vault public sewers or other underground construction which it may deem necessary, without compensation; and (2) that upon notice from the District of a desire to place any such construction in the area occupied by the vault, space clear and sufficient for it shall forthwith be made therein (by the acceptor) "without cost to the District." The acceptance concludes, "This permit is accepted with the understanding that the occupation of the vault space is permitted merely as an accommodation to the owner of the abutting premises, and that no right, title or interest of the public is in any way waived or abridged thereby, except as expressed in said permit and the conditions aforesaid."

The respondents, the R. P. Andrews Paper Company and Abraham Lisner, defended against the collection of the assessments, claiming that their permits to construct

were in such form as to create in each by contract a vested right of property in the vault in the street, of which they would be deprived without due process of law if they were required to pay the rental.

To sustain this position, the respondents select from paragraph 9 of the Building Regulations, *supra*, the provision that "no charge shall be made for the occupancy of public space by vaults," and that all permits are subject to revocation "when the vault space is needed for public use or improvements." From paragraph 3, *supra*, they select the stipulation that the vault space shall be vacated when ordered by the Commissioners "or needed for public uses," and from the terms of the acceptances of the permits the provision, that the Commissioners may place in the vaults any construction they may "deem necessary." Grouping these unrelated excerpts together it is contended that they constitute a contract on the part of the District to leave the respondents in the undisturbed possession of the vaults, free of charge, until such time as the space may be demanded because needed for some public use and improvement, and that since the act of Congress under which the disputed rental is imposed is purely a revenue measure which does not require the surrender of the space for any public use, but contemplates the continued private use of it, it is an invalid attempt to deprive the respondents of their property without due process of law.

This statement of the contention of the respondents is its own sufficient refutation.

In form the permit is a mere naked permission to build. Two of the three clauses relied upon to create rights of property in the streets are derived from the Building Regulations, which, as their name implies, are designed to regulate the materials of buildings and the manner of their construction and use,—they are not looked to, on such a mere reference as we have here, for a grant of rights

in streets,—and the third clause is from the acceptances of the permits, which are signed only by the applicants. When to this we add that, the applications culminated and ended in acceptances of the permits "with the understanding that the occupation of the vault space is permitted merely as an accommodation to the owner of the abutting premises and that no right, title or interest of the public is in any way waived or abridged thereby, except as expressed in said permit and the conditions [in the acceptances] aforesaid," and that the settled rule of law is that the grants of rights and privileges in streets are strictly construed so that whatever is not unequivocally granted therein is withheld, and that nothing passes in such case by implication, (*Knoxville Water Co.* v. *Knoxville*, 200 U. S. 22; *Blair* v. *Chicago*, 201 U. S. 400, 471; *Piedmont Power & Light Co.* v. *Graham*, 253 U. S. 193, 194) we cannot doubt that the permits to the respondents were mere licenses, subject to revocation at any time in the discretion of the Government of the District.

The Saks & Company case, No. 283, is, if possible, even less substantial than the other two. Whatever rights in the streets this respondent has must be derived from the application made in 1884 for a permit to erect a building with adjacent vaults, and from the presumption of a permit, arising from the fact that a vault was constructed and has been in use ever since. No formal permit appears in the record.

A license to Saks & Company to construct and use the vaults, revocable at will, would be sufficient to render them lawful constructions in the street until the privilege should be revoked, and this is all that can fairly be inferred against the public from the facts stated. Without a permit presumed the vault would be a public nuisance, but no grant of a permanent right in the street can be inferred from a mere application and use.

The Court of Appeals gives much greater significance

to the concluding words of the acceptances in permits in Nos. 282 and 284 "except as expressed in said permit and the conditions aforesaid," than we can find in them. There are certainly no limitations upon the rights of the public in the permit itself, and the conditions of acceptance here referred to were special agreements, in the acceptances, on the part of the applicants to surrender the vault space upon demand of the Commissioners for special purposes and to an extent designated, which we think not inconsistent with the larger declaration with which the permit was accepted, that the occupation of the vault was a mere accommodation to the receiver of the permit and did not constitute any waiver of any right, title or interest of the public in the streets.

Concluding, as we do, that the respondents were mere licensees, we see no reason for limiting the act of Congress, as the Court of Appeals limited it, to constructions after the date of the act. Such an interpretation of the act would so obviously result in unjust inequality that it should be adopted only under stress of imperative language which we do not find in it.

It results that the judgment of the Court of Appeals of the District will be reversed and that of the Supreme Court affirmed in each of the cases.

Reversed.

DANE v. JACKSON, TREASURER AND RECEIVER-GENERAL.

ERROR TO THE SUPREME JUDICIAL COURT OF THE STATE OF MASSACHUSETTS.

No. 720. Argued April 15, 1921.—Decided June 1, 1921.

1. This court cannot revise the taxing systems of the States in an attempt to produce a more just distribution of the burdens of taxation than that arrived at by the state legislatures. P. 598.
2. A state tax law, to be in conflict with the Fourteenth Amendment, must propose, or clearly result in, such flagrant and palpable inequality between the burden imposed and the benefit received as to amount to the arbitrary taking of property without compensation. P. 698.
3. In Massachusetts, the state and local taxes on real estate, tangible personal property and polls are laid and collected by the respective municipal subdivisions, each paying its quota to the State, but intangible personal property has been largely exempted from local taxation and the revenue therefrom is derived through a uniform income tax, laid and collected directly by the State, and is distributed to the subdivisions, not in proportion to the amounts of it contributed from each, but under a plan whereby, in increasing percentages through a series of years, and thereafter in its entirety, it is to be divided among them annually in proportion to the amounts of their respective state taxes, based on real estate, tangible personal property and polls. (Gen. Acts 1919, c. 314.) *Held:* (1) That this plan of distribution, part of a complex scheme designed to correct inequalities and prevent evasion, cannot be interfered with, as in violation of the Fourteenth Amendment, upon the ground that, in operation, it returns to the plaintiff's town less income tax than he and its other inhabitants pay, and distributes the overplus to other subdivisions which may elect to use it for their local purposes not beneficial to those who paid it. P. 569. (2) It is to be presumed that the moneys so distributed will be devoted to lawful public uses. P. 601.

129 N. E. Rep. 606, affirmed.

THE case is stated in the opinion, *post*, 594.

Mr. Philip Nichols, with whom *Mr. Ralph A. Stewart* and *Mr. Charles O. Pengra* were on the brief, for plaintiff in error:

The Act of 1919 is unconstitutional in providing for the distribution of the income tax upon a rule of apportionment not based on the situs of the property upon which the tax was assessed.

No tax can be constitutionally levied except for the use of the district taxed. Cooley, Taxation, 3d ed., p. 225; Gray, Taxing Power, § 408; Desty, Taxation, §§ 9, 10; *Cole* v. *La Grange*, 113 U. S. 1, 8; *Thomas* v. *Gay*, 169 U. S. 264, 276; *Beach* v. *Bradstreet*, 85 Connecticut, 344, 357; *Farris* v. *Vannier*, 6 Dakota, 186; *State* v. *Lafayette Fire Insurance Co.*, 134 Louisiana, 78; *Sharpiess* v. *Philadelphia*, 21 Pa. St. 147; *Robinson* v. *Norfolk*, 108 Virginia, 14, 16; *Chicago &c. Ry. Co.* v. *State*, 128 Wisconsin, 553, 661; and many other cases. The principle involved is fundamental and underlies all government that is based upon reason rather than upon force. *Norwich* v. *Hampshire County Commissioners*, 13 Pick. 60; *Duffy* v. *Treasurer & Receiver General*, 234 Massachusetts, 42, 51; *Opinion of Justices*, 234 Massachusetts, 612, 620.

The Massachusetts income tax is a tax on property having its location in the various cities and towns of the Commonwealth. It is, at least as to its most important part, a property tax, and not an excise. *Opinion of the Justices*, 220 Massachusetts, 613, 623; *Tax Commissioner* v. *Putnam*, 227 Massachusetts, 522, 531; *Kimball* v. *Cotting*, 229 Massachusetts, 541, 543; *Maguire* v. *Tax Commissioner*, 230 Massachusetts, 503, 512.

This view of the character of a tax levied on the income of certain specified classes of property as distinguished from a tax on the income from professions, trades, employments, or business, or from a tax on income of every description, is in accord with the views expressed by this court. *Pollock* v. *Farmers' Loan & Trust Co.*, 157 U. S.

429; 158 U. S. 601; *Brushaber* v. *Union Pacific R. R. Co.*, 240 U. S. 1; *Stanton* v. *Baltic Mining Co.*, 240 U. S. 103.

Whether the tax imposed by § 5 of the act upon income derived from professions, employments, trade, or business is an excise or a property tax is perhaps open to doubt, although the tax which it replaces, and which had been imposed continuously since the first settlement of the colony, appears to have been considered a property tax. See *Opinion of the Justices*, 220 Massachusetts, 613, 624, 625. But in any event the more important tax, the tax on the income of intangible property, is a property tax.

All of the property subject to the income tax has a definite situs in some city or town within the Commonwealth. The principles of the law of situs which govern the taxation of property are applicable to the taxation of income. If an income is to be taxed by a State, the person in receipt of the income must have a domicil within the State, or the property or business out of which the income arises must be situated within the State, so that the income may be said to have a situs therein. *State* v. *Wisconsin Tax Commission*, 161 Wisconsin, 111; *United States Glue Co.* v. *Oak Creek*, 247 U. S. 321; *Shaffer* v. *Carter*, 252 U. S. 37; *Travis* v. *Yale & Towne Manufacturing Co.*, 252 U. S. 60; *State* v. *Eberhardt*, 158 Wisconsin, 20.

While, as between different municipalities in the same State, it is competent for the legislature to modify the common-law rules of situs, and to give to particular classes of property any situs it deems best, this principle is subject to the limitation that there must be some appreciable relation between the municipality exacting the tax and the person upon whom the burden is cast, either directly or by reference to the property taxed, from which there can reasonably be seen reciprocal duties to accord benefits on the one hand, and to respond therefor on the other. *Teagan Transportation Co.* v. *Detroit*,

139 Michigan, 1; *Chicago &c. Ry. Co.* v. *State*, 128 Wisconsin, 553, 665.

A very substantial part of this income is constitutionally taxable in Massachusetts only because the person receiving the income lives there. It seems clear that all of the income must necessarily have a situs in some city or town in that State.

The income tax is not levied for the use of the district taxed.

While municipal corporations, in Massachusetts as elsewhere, are not permitted to levy taxes or to expend money except for the public use, the distinction between expenditures which a municipal corporation undertakes as an agent of the State for the accomplishment of general public purposes and those which it undertakes in its private and proprietary capacity with special reference to the benefit of its own inhabitants is as fully recognized in Massachusetts as in any other State. *Mount Hope Cemetery* v. *Boston*, 158 Massachusetts, 509, 519; *Bolster* v. *Lawrence*, 225 Massachusetts, 387.

The General Laws of Massachusetts authorize cities and towns to expend money for many functions which are universally recognized as undertaken by them in their private and proprietary capacity for the use and benefit of their own inhabitants, and not for the use and benefit of the public as a whole.

A city or town may expend money paid over to it under the statute now in controversy for any of those purposes, although the greater part of the money may have been raised by the taxation of property situated in other cities and towns; and, conversely, a large proportion of the taxes raised upon intangible property located in one city or town may be expended for the private and proprietary purposes of inhabitants of other cities and towns.

If it had been expressly provided by statute that the City of Springfield might establish a municipal lighting

plant to furnish electric light to its inhabitants at lower rates than could be obtained from a private enterprise, and that the town of Brookline should be assessed for the cost of the undertaking the sum of $225,000, no one would deny that the statute was unconstitutional as a plain abuse of legislative power. *Tippecanoe County Commissioners* v. *Lucas*, 93 U. S. 108, 115; *Opinion of the Justices*, 234 Massachusetts, 612.

It is, however, contended by the defendant in error that such a result can be constitutionally effected by the device of interposing a set of state officials to collect and distribute the tax; that the tax is a state, and not a municipal, tax, and that the legislature in distributing the proceeds of the tax to the various cities and towns of the State is merely appropriating for public purposes funds raised by taxation throughout the State.

The statement that this is a state tax (*Duffy* v. *Treasurer & Receiver General*, 234 Massachusetts, 42) is entirely unwarranted. It is admittedly levied wholly for the use of the several municipalities, and in no degree for the use of the State, and the officers of the State in assessing, collecting, and distributing the tax are acting merely as agents of the several cities and towns for whose use the tax is levied.

This view of the nature of the tax is corroborated by the practical construction put upon it by both administrative and legislative branches of the state government.

The plaintiff in error's position is in substance this: So far as the Constitution of the United States is concerned, the legislature of a State may abolish all the cities, towns and other municipal subdivisions and provide for the administration of the affairs of the whole State by state officers and by means of appropriations made directly by the legislature from taxes levied throughout the State as a whole. But so long as the legislature sees fit to allow municipal corporations to exist, and to exercise powers of a private and commercial character for the use and

benefit of their own citizens and not for the use and benefit of the State as a whole, and to appropriate funds for the exercise of such powers through their own municipal legislative bodies, it is not competent for the legislature, directly or indirectly, through any means, device, or instrumentality whatever, to provide for the taxation of persons or property remote from the municipal limits for the use of such a municipal corporation.

The method of distribution adopted in the 1919 statute is not in accord with the established practices of constitutional governments. *Murray's Lessee* v. *Hoboken Land & Improvement Co.*, 18 How. 272.

A reasonably careful study of the statutes and decisions of other jurisdictions discloses no instances in which a property tax has been collected by a State or county and distributed to the constituent towns, in which the distribution has not been made strictly in accordance with the source from which the tax was derived.

The Act of 1919 is unconstitutional in establishing a purely arbitrary discrimination between taxpayers of different towns. *Sunday Lake Iron Co.* v. *Wakefield*, 247 U. S. 350, and other cases.

Mr. William Harold Hitchcock, with whom *Mr. J. Weston Allen*, Attorney General of the State of Massachusetts, was on the brief, for defendant in error.

MR. JUSTICE CLARKE delivered the opinion of the court.

In this proceeding we are asked to review and reverse a judgment of the Supreme Judicial Court of Massachusetts, holding valid an act of the General Court (General Acts, 1919, c. 314), providing for the distribution of the proceeds of an income tax among the towns, cities and taxing districts of that State, against the contention that it violates the due process and equal protection of the laws

clauses of the Fourteenth Amendment to the Constitution of the United States.

By amendment to the constitution of Massachusetts, approved by the people in 1915 (XLIV), the General Court was given power to impose a tax at different rates upon income derived from different classes of property but at a rate uniform throughout the Commonwealth on incomes derived from the same class of property and to exempt the property producing such income from other taxes.

Pursuant to this authority, a law was enacted in 1916 (General Acts, 1916, c. 269), which it is sufficient to describe as taxing, with exceptions negligible here: income received from bonds, notes, money at interest and debts due the person paying the tax; dividends on shares of any corporations not organized under the laws of Massachusetts; dividends on shares in partnerships, associations or trusts, the beneficial interest in which is represented by transferable shares; and income derived from professions, employments, trade or business. Intangible property, the income from which is taxed by the act, is practically exempted from local taxation.

The validity of this act is not assailed.

Prior to the enactment of this law, the taxing subdivisions of the State had taxed the real estate and tangible and intangible personal property, within their respective jurisdictions, for both state and local purposes, and the exemption from local taxation of intangible property, provided for in the act, necessarily resulted in an important reduction in their revenues.

The proceeds of the income tax thus provided for were distributed by temporary acts applicable only to the years 1917 and 1918, but in the year 1919 the act was passed, the validity of which is assailed in this proceeding, which provides, in substance: that the State Treasurer shall pay to each city, town and district, from the income tax

collected for the year 1919, an amount equal to ninety per cent. of the difference between the average amount of the tax levied on tangible and intangible personal property therein in the years 1915 and 1916 and the average that would be produced by a tax upon the personal property actually assessed therein for the years 1917 and 1918 at the average of the rates of taxation prevailing therein in 1915 and 1916. In each succeeding year, until and including the year 1927, the amount payable was reduced to an amount ten per cent. less than it was for the next preceding year. Any amount collected in any year prior to 1928, in excess of the required payments must be distributed to the cities, towns and districts of the State in proportion to the amount of the state tax imposed upon each for such year, and in 1928 and thereafter the whole of the amount of the income tax must be so distributed each year.

It is obvious that it was the purpose of this act to reimburse the various taxing subdivisions until the year 1928 to the extent thought necessary to supply the loss which each would sustain by the withdrawal from its taxing power of the intangible property the income of which was taxed by the State, and that prior to 1928 any excess of the income tax fund over such requirements, and beginning with that year and continuing thereafter the whole of that fund should be distributed to such subdivisions in proportion to the amount of the state tax paid by each.

The petition in the case is one for mandamus and the essential allegations of it are: that the petitioner, an inhabitant of the town of Brookline, in the years 1919 and 1920 derived income from intangible personal property and otherwise which rendered him subject to the provisions of the income tax act of 1916; that the state tax in Massachusetts is imposed upon towns and cities in proportion to the value of the real estate and tangible personal property and polls taxable therein, without regard

to intangible property or incomes taxed; that a sum in excess of $1,000,000 was raised in the year 1920 by the taxation of the inhabitants of Brookline upon incomes derived during the year 1919 from intangible property located in that town and on other income earned therein, and that as great an amount will be in like manner raised in 1921; that under the distribution statute of 1919 there will be returned to the town of Brookline not more than $500,000 in the year 1920, and in each year thereafter a less amount until in the year 1928 not more than $250,000 will be returned to it, while other towns, having greater real estate and tangible personal property valuation for taxation, will receive much more than their inhabitants will have contributed to the income tax fund; and that such payments may be used by the cities and towns receiving them, if they so elect, for the exclusive use and benefit of their own inhabitants for local and "proprietary" purposes, which would not in any degree contribute to the benefit of the petitioner, or of the inhabitants of Brookline or of the citizens generally of the Commonwealth. Upon these allegations a writ of mandamus, commanding the respondent not to distribute any of the income tax collected in the years 1920 or 1921, was prayed for.

Upon demurrer the petition was dismissed.

This statement of the case shows that it is admitted: that the income tax act of 1916 is a valid law; that the contention is, only, that the act of 1919, providing for distribution of the tax, is unconstitutional; and that this contention rests wholly upon the allegation of the petition that such amount of the income tax collected by the State from the plaintiff in error and from other inhabitants of Brookline as may be returned to any other subdivision thereof, may, if the subdivision so elects, be used for local or "proprietary" purposes such that no benefit whatever will accrue from the expenditure of the tax to the plaintiff

in error or to other inhabitants of the town of Brookline or to the inhabitants of the State in general.

It is argued that from these conditions it must follow that the plaintiff in error and other inhabitants of Brookline are taxed for the exclusive benefit of the inhabitants of other subdivisions of the State, and that this violates the due process of law clause, or, if not that, the equal protection of the laws clause, of the Fourteenth Amendment to the Constitution of the United States, and that therefore the proposed distribution of the tax should be restrained.

The relation of the power of the federal courts to the taxing systems of the States has been the subject of much discussion in the opinions of this court, notably in the following cases: *McCulloch* v. *Maryland*, 4 Wheat. 316, 428 to 432; *Providence Bank* v. *Billings*, 4 Pet. 514, 563; *State Tax on Foreign-Held Bonds*, 15 Wall. 300, 319; *Davidson* v. *New Orleans*, 96 U. S. 97, 105; *Kirtland* v. *Hotchkiss*, 100 U. S. 491, 497; *Memphis Gas Light Co.* v. *Shelby County*, 109 U. S. 398, 400; *Bell's Gap R. R. Co.* v. *Pennsylvania*, 134 U. S. 232, 237, 238; *Merchants' & Manufacturers' Bank* v. *Pennsylvania*, 167 U. S. 461, 463, 464; *Henderson Bridge Co.* v. *Henderson City*, 173 U. S. 592, 615, 616; *Travellers' Insurance Co.* v. *Connecticut*, 185 U. S. 364, 371; *Wagner* v. *Baltimore*, 239 U. S. 207, 220.

While the nature of the subject does not permit of much finality of general statement, it may plainly be derived from the cases cited that since the system of taxation has not yet been devised which will return precisely the same measure of benefit to each taxpayer or class of taxpayers, in proportion to payment made, as will be returned to every other individual or class paying a given tax, it is not within either the disposition or power of this court to revise the necessarily complicated taxing systems of the States for the purpose of attempting to produce what might be thought to be a more just distribution of the

burdens of taxation than that arrived at by the state legislatures (4 Pet. 517; 15 Wall. 319; 109 U. S. 400; 185 U. S. 371, *supra*); and that where, as here, conflict with federal power is not involved, a state tax law will be held to conflict with the Fourteenth Amendment only where it proposes, or clearly results in, such flagrant and palpable inequality between the burden imposed and the benefit received, as to amount to the arbitrary taking of property without compensation—"to spoliation under the guise of exerting the power of taxing." (134 U. S. 237; 173 U. S. 615; 239 U. S. 220, *supra*.) For other inequalities of burden or other abuses of the state power of taxation, the only security of the citizen must be found in the structure of our Government itself. So early as 4 Pet. 563, *supra*, it was said by Chief Justice Marshall: "This vital power [of taxation] may be abused; but the Constitution of the United States was not intended to furnish the corrective for every abuse of power which may be committed by the state governments. The interest, wisdom and justice of the representative body, and its relations with its constituents, furnish the only security, where there is no express contract, against unjust and excessive taxation; as well as against unwise legislation generally."

The application of this summary of the law renders our conclusion not doubtful.

The income tax involved is uniform in its application to all income within the description of the act of all inhabitants of the State without regard to the taxing subdivision in which they may reside. It is collected by the State and the capital value producing the tax is practically exempted from other taxation. The tax was authorized by the people of the State and the act was given form by the legislature, for the purpose of correcting flagrant inequalities of taxation, resulting from what the Supreme Judicial Court, in the opinion in this case, called the "colonization" of wealthy owners of intangible securities in

towns and cities which had exceptionally low rates of taxation "brought about by avoidance and evasion, legal and illegal, of the tax laws prevailing before the enactment of the income tax law." Report to the Senate and House of Representatives of Massachusetts by "The Joint Special Committee on Taxation," January 31, 1919. The report just referred to was made after an elaborate study of the subject of the distribution of this income tax, in the progress of which largely attended public hearings were held in many cities of the State, and it recommended the law assailed, in substantially the form in which it was enacted. The plan of returning the tax to the various taxing districts, in which those who paid it resided, which is so strongly urged in argument, was carefully considered and was rejected, as expensive and difficult, if not impracticable, of application, and as calculated to ignore the considerations which led to the enactment of the law and to restore the evils and inequalities of taxation which it was devised to correct. It is also apparent that this distribution law should not be considered as an isolated provision but as an important part, which it clearly is, of an elaborate and involved system of state taxation, which would be seriously affected by the granting of such a writ of mandamus as is prayed for.

Accepting as true, as we must, the allegation of the petition, admitted by the demurrer, that the local subdivisions of the State may, "if they so elect," devote the money derived from the income tax through the distribution provided for in the act assailed, to purposes which might not confer any certain benefit upon the plaintiff in error or persons in like situation, yet, it must be accepted on the other hand that it is entirely clear that there are many purposes to which these subdivisions may devote the money, "if they so elect," which would be of such state-wide influence that the plaintiff in error and those similarly situated would very certainly be benefited

by the expenditure of it. It must be said also in this case, as was said by the Supreme Judicial Court of Massachusetts, in the decision of a similar case, *Duffy* v. *Treasurer and Receiver General*, 234 Massachusetts, 42, "There is nothing on this record to justify the assumption that the several municipalities design to devote to other than a public use any portion of the income tax thus distributed to them. Every presumption is in favor of legality in the absence of evidence to the contrary." This presumption of legality is a sound and strong one, and is amply sufficient to prevail over the effect of the admitted allegation of the petition.

The case presented is clearly not one of that extreme inequality in taxation of which the federal courts should lay hold, but involves rather a question of state policy, of a character which the people have been satisfied to leave to the judgment, patriotism and sense of justice of representatives in their state legislature.

The judgment of the Supreme Judicial Court of Massachusetts is

Affirmed.

STATE OF OKLAHOMA *v.* STATE OF TEXAS. UNITED STATES, INTERVENER.

IN EQUITY.

No. 23, Original.

ORDERS AND INTERLOCUTORY DECREE ENTERED JUNE 1, 1921.

Directing the Receiver to sink an oil and gas well on land claimed by Pearson et al., with provisions as to expenses, operation, and disposition of proceeds.

Upon application of A. E. Pearson, R. R. Bell, Susie Shaw, Georgia Darby, Mrs. John Mounts, Henry G. Beard, and the Silver Moon Oil Company, claimants of certain tracts or parcels of land purchased by Fred Capshaw from the United States of America under patent dated February 17, 1920;

It is ordered that the Receiver be and he is hereby authorized and directed to sink a well for oil and gas upon the land described in said patent at such place as the Receiver shall select, provided said applicants shall pay in advance from time to time as required the cost and expense of sinking the same and bringing it into production. The said well shall be operated by the Receiver as he operates wells on other lands in the river-bed area, and he shall conserve and dispose of the proceeds of the oil and gas as in the case of wells on other lands in the river-bed area, and shall reimburse the said Pearson, et al., out of the net proceeds for the moneys so advanced and paid by them for drilling the well and bringing it into production; the remainder of such proceeds to be retained by him subject to the order of the court.

Directing the Receiver to sink an oil and gas well on land claimed by Eoff, with provisions as to expenses, operation, and disposition of proceeds.

Upon motion of Luther Eoff, claiming to be owner of an oil and gas lease upon a certain tract of 500 acres of land described in his motion, situate on the flood plain on the south side of Red River, in Range 15 West;

It is ordered that the Receiver be and he is hereby authorized and directed to sink a well for oil and gas upon the land described in said motion at such place as the Receiver shall select, provided said applicant shall pay in advance from time to time as required the cost and expense of sinking the same and bringing it into production. The said well shall be operated by the Receiver as he operates wells on lands in the river-bed area, and he shall conserve and dispose of the proceeds of the oil and gas as in the case of wells on lands in the river-bed area, and shall reimburse the said Eoff out of the net proceeds for the moneys so advanced and paid by him for drilling the well and bringing it into production; the remainder of such proceeds to be retained by the Receiver subject to the order of the court.

Appointing a Special Master to hear and report upon claims of Armstrong, et al., to certain moneys held by the Receiver.

Upon motion of J. R. Armstrong, et al., and upon the assent of the Receiver, it appearing that the Receiver has in his hands a fund of approximately Fifty thousand dollars, being part of the proceeds derived by him from the production of Receiver's Wells Nos. 157, 162, and 170, operated by him for said Armstrong and for one C. J. Benson, under whom he claims by assignment;

It is ordered that Frederick S. Tyler, Esq., be and he is hereby appointed a special master to hear and report to this court for determination the claim of said J. R. Arm-

strong to have said fund turned over to him as purchaser of said wells; and said master shall hear and report on said claim and on all other claims that may be presented against said fund.

Said master shall have authority to issue process of subpœna to compel the attendance of witnesses, and it shall be his duty to give notice to all parties concerned, to fix the time and place of hearing, and adjourn the same from time to time if necessary; and he shall report all the evidence taken, together with his findings of fact, conclusions of law, and recommendation in the premises, for the ultimate consideration and action of this court.

If for any reason the said Frederick S. Tyler, Esq., shall be unable to act as such special master, or to complete his duties as such, a special master to act in his place shall be named by the Chief Justice or the senior Associate Justice of this Court.

Limiting development work, and directing the Receiver to collect, withhold and impound part of gross proceeds of gas, advertise for, examine and settle claims, and make report of those unsettled.

Upon considering the Fifth Report of the Receiver, filed herein May 26, 1921, it is ordered:

(1) That until further order all development work by the Receiver (except as prescribed in certain other orders made this day) shall be confined to the completion of the wells in the river-bed area, about twelve in number, work upon which already has been begun.

(2) That the Receiver be and he is hereby authorized and directed to collect, withhold, and impound three-sixteenths of the gross proceeds of gas produced by wells within the receivership area from and after June 1, 1921.

(3) That the Receiver be and he is hereby authorized to publish a notice in four daily newspapers, two circulating in Texas and two circulating in Oklahoma, to be

selected by him, requesting all persons having claims against the Receiver or against the property or funds in his custody to present the same to the Receiver within 60 days from the date of publication of such notice, accompanying their statements of claim with supporting affidavits and certified or sworn copies of any documentary evidence upon which they may rely; and the Receiver is directed to examine and investigate said claims and supporting evidence, and he is hereby authorized to settle and discharge the same if he can do so upon a fair and equitable basis; and as to any not so adjusted and settled he shall make a full report to this court at its next Term for such further action as the court may deem proper.

Setting down cause for hearing on special issues raised between the United States and private parties claiming riparian land on the north bank of Red River, and placer mining locations, and between Oklahoma and the United States concerning school sections; and on the claims of all other interveners claiming lands on north bank or placer mining locations; and appointing a commissioner to take and report evidence.

It appearing that special issues have been joined in this cause (1) upon the intervening petition of E. Everitt Rowell, claimant of riparian land on the north bank of Red River, and the answer thereto of the United States embodied in Paragraph II of its amended petition of intervention; (2) upon the intervening petition of A. E. Pearson, R. R. Bell, Susie Shaw, Georgia Darby, Mrs. John Mounts, Henry G. Beard, and the Silver Moon Oil Company, claimants of riparian lands on north bank of Red River, and the answer thereto of the United States embodied in Paragraph II of its amended petition of intervention; (3) upon the amended petition of intervention of the Burk Divide Oil Company (Consolidated) and others, placer mining claimants, and the answer of the

United States thereto embodied in Paragraph III of its amended petition of intervention; (4) upon the petition of intervention of the Mellish Consolidated Placer Oil Mining Association, a placer mining claimant, and the answer thereto of the United States embodied in Paragraph III of its amended petition of intervention; (5) and as between the State of Oklahoma and the United States as to the school sections abutting on Red River owned by said State, in respect to which it claims by riparian right the entire bed of Red River to the south bank, as said claim is set up in the original bill of said State and answered by the United States in Paragraph II, sub-paragraph 10, of its amended petition of intervention:

It is ordered that this cause be and it is hereby set down for hearing as to said special issues, and as to the claims of any and all other interveners herein who may claim riparian lands on the north bank of Red River or placer mining locations under the mining laws of the United States, on the seventeenth day of October, A. D., nineteen hundred and twenty-one.

Frederick S. Tyler, Esq., of Washington, D. C., is hereby appointed as commissioner to take the evidence of the said respective parties with respect to said issues and claims, and report the same to the court, but without findings or conclusions. Said evidence shall be taken and closed on or before July thirtieth, 1921. The evidence as to all said issues and claims shall be embodied in one record, but the evidence as to each issue or claim shall be set forth separately so far as practicable. Subject to the time fixed for closing said evidence, the time and place for commencing and proceeding with the taking of testimony, and the order in which the different matters shall be taken up, may be fixed by agreement of the parties, or in case of disagreement shall be fixed by the commissioner.

If for any reason the said Frederick S. Tyler shall be unable to act as such commissioner, or to complete his

duties as such, a commissioner to act in his place shall be named by the Chief Justice or the senior Associate Justice of this Court.

Order on the District Judge for the Northern District of Texas to show cause why he should not be prohibited from entertaining an action against the Receiver.

It appearing from the Fifth Report made by Frederic A. Delano, the Receiver heretofore appointed by this court in the above stated cause, that an action recently was commenced against him in the United States District Court for the Northern District of Texas by the Casa Oil Company to recover damages for the alleged conversion of certain personal property claimed by said Casa Oil Company and alleged to have been seized and appropriated by said Receiver; and that a citation has been issued by said court commanding said Receiver to appear in said cause and make answer to the petition therein at the next regular term of said court, to be held on the twenty-first day of November, A. D. 1921;

It is ordered that the Honorable James C. Wilson, Judge of the said United States District Court for the Northern District of Texas, do show cause before this court, at the Capitol in Washington, in the District of Columbia, on the seventeenth day of October, A. D. 1921, why a writ of prohibition should not be issued commanding him to desist from further entertaining jurisdiction of said cause.

Authorizing the Receiver to make certain payments reimbursing operators and drillers of wells.

It is ordered that Frederic A. Delano, Receiver, be and he is hereby authorized, in his discretion, out of thirteen-sixteenths of the net proceeds of any well or wells in the river-bed area (other than the well known as the Burk Senator) paid to him since April first 1920, to reimburse to those operators or drillers who had drilled and brought

into production such well or wells, their actual cost of such work, including a reasonable allowance for field supervision, but excluding any allowance for general or office supervision, and after deducting a proper allowance for the yield derived by them from such well or wells prior to the taking possession of the same by the Receiver.

Interlocutory Decree declaring the boundary in question to be along the south bank of Red River; setting down cause for hearing as to its more definite location; directing as to use of evidence taken and the taking of further evidence, and appointing a commissioner.

This court having on the seventh day of June, 1920, set this cause down for hearing upon specified questions of law, the hearing having been had, and the court having considered of the matter, and having announced its opinion and conclusion on April 11, 1921 [*ante*, p. 70]:

It is ordered, adjudged and decreed that according to the Treaty of 1819 between the United States and Spain, as heretofore examined and construed by this court in the case of *United States* v. *Texas*, 162 U. S. 1, the decree in which is conclusive upon the parties to this cause, the true boundary between the State of Oklahoma and the State of Texas where it follows the course of the Red River from the 100th degree of west longitude to the eastern boundary of the State of Oklahoma is along the south bank of Red River. And as it still needs to be determined between the State of Oklahoma, Complainant, and the United States of America, Intervener, on the one hand, and the State of Texas, on the other hand, as to what constitutes the south bank of Red River, as to where along that bank the true boundary line is, and as to the proper mode of locating the same upon the ground;

It is, on motion of the State of Oklahoma, concurred in by the State of Texas and the United States of America, ordered that this cause be set down for hearing upon

those questions on the ninth day of January, A. D., 1922.

And it is ordered that upon said hearing the parties shall be at liberty to refer to and use the evidence heretofore taken and returned in this cause so far as applicable to said question, without the necessity of re-publication or reprinting; and they shall proceed to take such further evidence as they may desire relating, among other things, to the characteristics and regimen of Red River, the physical conditions along the same, any substantial changes that may have occurred since the Treaty by avulsions, relictions, erosions, accretions, or other natural causes, and the practical construction and application of the Treaty of 1819 by the governments and States concerned and their inhabitants.

Frederick S. Tyler, Esq., of Washington, D. C., is hereby appointed as commissioner to take said further evidence and report the same to the court, but without findings or conclusions; and if for any reason said Frederick S. Tyler shall be unable to act as such commissioner, or to complete his duties as such, a commissioner, to act in his place shall be named by the Chief Justice or the senior Associate Justice of this Court.

Subject to the limitations hereinafter imposed, the times and places of taking such testimony, and the order of taking the same, may be fixed by stipulation of the parties, and, if they shall fail to stipulate, shall be fixed by the commissioner. The taking of testimony shall commence not later than the fifteenth day of August, 1921, and shall be concluded on or before the twenty-ninth day of October following. Unless the parties otherwise stipulate, the evidence in chief on the part of the United States shall be presented first, that on the part of the State of Oklahoma next, and that on the part of the State of Texas next; and the rebuttal evidence of the respective parties shall be presented in the same order.

The hearing on the counterclaim of the State of Texas, and the taking of testimony thereon, is reserved for further order.

Forbidding filing of petitions in intervention without special leave.

It is ordered that no petition in intervention may hereafter be filed herein under the order of June 7, 1920, except upon special leave given by the court. [253 U. S. 470.]

MISSOURI, KANSAS & TEXAS RAILWAY COMPANY *v.* UNITED STATES.

APPEAL FROM THE COURT OF CLAIMS.

No. 52. Submitted April 26, 1921.—Decided June 6, 1921.

1. After a railroad company had entered into a contract to carry the mails with notice that it would be subject to all postal laws and regulations which were or might become applicable during the term of the service and that the adjustment of compensation based on weighings of the mails carried during 90 working days was subject to further orders, as well as fines and deductions, it discontinued an important train and thereby occasioned a diversion of part of the mails to other lines; the Post Office Department, upon the authority of the Act of August 24, 1912, c. 389, 37 Stat. 539, enacted after the contract was entered into, weighed the diverted mails for 21 days and readjusted the compensation accordingly. *Held*, that such readjustment did not violate the contract although it diminished the compensation, and in part retroactively. P. 613. *Delaware, Lackawanna & Western R. R. Co.* v. *United States*, 249 U. S. 385; *Mail Divisor Cases*, 251 U. S. 326.
2. The Act of 1912, *supra*, allows the readjustment to be made after a weighing of the diverted mails only, and the proviso (since repealed) that they must equal ten per cent "of the average daily

weight on any of the routes affected," refers to the average daily weight ascertained by the last previous general weighing, and means ten per cent, not upon all, but upon some one, of the routes affected. Pp. 614, 615.

3. The act also allows the readjustment to relate back to the first of July previous to the date of the act. P. 614.

53 Ct. Clms. 641, affirmed.

THE case is stated in the opinion.

Mr. Alexander Britton for appellant.

Mr. Frank Davis, Jr., *Mr. J. Robert Anderson* and *Mr. Joseph Stewart*, Special Assistants to the Attorney General, for the United States.

MR. JUSTICE HOLMES delivered the opinion of the court.

This is a claim for $9,429.92 additional pay for carrying mails between July 1, 1912, and July 1, 1914. The claimant had been transporting them under an adjustment of compensation that expired on June 30, 1910. In contemplation of the usual quadrennial readjustment by weighing, the Postmaster General sent to the claimant the customary form of Distance Circulars to be filled out and to be accompanied by the latest working schedules of trains operated over the routes concerned. The circular contained this clause: "The company named below agrees to accept and perform mail service upon the conditions prescribed by law and the regulations of the department applicable to Railroad Mail Service." The claimant signed the circular protesting against certain regulations, and was answered on June 30, 1910, that the department would not enter into contract with any railroad company by which it might be excepted from the operation or effect of any postal laws or regulations and that it must be understood that from the beginning of the contract term named

and during the continuance of the service the company would be "subject, as in the past, to all the postal laws and regulations which are now or may become applicable during the term of the service." In answer to a reply to this letter it was reiterated that it must be understood that the Company would be "subject, as in the past, to the usual customs and practices in relation to railroad mail service as well as to the conditions stated in my letter" of June 30, 1910. The weighings took place and on September 15, 1910, by a notice approved by the Postmaster General on September 22, the claimant was informed that the compensation for route No. 153010, (the route chiefly concerned), had been fixed from July 1, 1910, to June 30, 1914 "(unless otherwise ordered)" at certain sums, "upon returns showing the amount and character of the service," for the usual time—(ninety working days). The notice added "This adjustment is subject to future orders and to fines and deductions, and is based on a service of not less than six round trips per week." This correspondence is relied upon by the claimant as a contract fixing its pay for four years.

In 1906 the claimant had established a fast mail train from Parsons, Kansas, that connected with the Frisco System train No. 3, at Vinita, Oklahoma, with further connections that carried the mail to Houston, Galveston and San Antonio, Texas. It had guaranteed the maintenance of the service until July 1, 1910, and was maintaining it at the time of the readjustment in that year. Its return on the Distance Circular for route No. 153010 showed Vinita as a station where mails were put on and put off trains, and the adjustment showed allowances for mails from Parsons to Vinita and from Vinita to Texas. The claimant gave no notice that the fast train would be discontinued. Early in 1912, however, it was discontinued, the Postoffice Department protesting that it was a violation of contract, and being compelled thereby to

make other provisions for the mails concerned. Thereafter, on November 22, 1912, the Department ordered the mails diverted to other lines to be weighed for twenty-one days beginning on November 26, so far as such mails could be definitely identified, the mail not to be weighed in case of doubt—that provision of course being favorable to the road. The result was an order of February 21, 1913, approved by the Postmaster on March 1, 1913, by which the compensation on route No. 153010 was diminished by $10,914.04 a year, from July 1, 1912, and that of two other routes increased by $6,199.08. The claimant contending that the whole proceeding was illegal sues for the difference between the new and the old allowance for the two years when the new order was enforced.

The Government justifies the Department's course under the arrangement that we have recited, the previously existing law and the Act of August 24, 1912, c. 389, § 4, 37 Stat. 539, 554. "When, after a weighing of the mails for the purpose of readjusting the compensation for their transportation on a railroad route, mails are diverted therefrom or thereto, the Postmaster General may, in his discretion, ascertain the effect of such diversion by a weighing of such mails for such number of successive working days as he may determine, and have the weights stated and verified to him as in other cases, and readjust the compensation on the routes affected accordingly: *Provided*, That no readjustment shall be made unless the diverted mails equal at least ten per centum of the average daily weight on any of the routes affected: *Provided further*, That readjustment made hereunder shall not take effect before July first, nineteen hundred and twelve, and shall be for diversions occurring after January first, nineteen hundred and twelve." The claimant contends that it had a contract that could not be affected by this statute and that the statute was not followed in what was done.

The contention that the arrangement between the De-

partment and the claimant was a contract that the statute could not affect is sufficiently answered by *Delaware, Lackawanna & Western R. R. Co.* v. *United States*, 249 U. S. 385, and *The Mail Divisor Cases*, 251 U. S. 326, coupled with the express notice that the railroad would be "subject to all the postal laws and regulations which are now or may become applicable during the term of the service." Moreover it is an extravagant interpretation of the adjustment to suppose that the railroad could discontinue an important item of the services upon which the compensation was computed, and still demand the same pay.

The construction of the statute also seems to us to be tolerably plain upon the points mainly argued. The effect of the diversion of mails may be ascertained by "a weighing of such mails" (that is, very plainly, the diverted ones) for such number of days as the Postmaster General may determine. This is not a recurrence to the expensive quadrennial weighing for ninety days but a limited investigation for a limited purpose. The result of the last general weighing, which is sufficient to afford a satisfactory basis for payment, is accepted by the statute as a near enough basis for the ten per cent. test that it creates; the object of the test being merely to show that the diversion has been substantial. The ratio fixed had no other importance than to indicate a case for readjustment and was not necessary even for that, as was shown by the repeal of the proviso in a few years. Act of May 18, 1916, c. 126, § 5, 39 Stat. 159, 161.

The statute itself contemplates a readjustment in respect of past services, since it was not approved until August 24, 1912, and allows a readjustment from the first of the previous July. As the change in the pay is made in respect of a change that has occurred in the service by which the current pay was fixed, the railroad suffers no injustice, and, as we have said, by the terms of its arrangement it took the risk of such a statute being passed.

There is an ambiguity in the words "ten per centum on any of the routes affected." The railroad seems to have contended that they required the diverted mails to equal ten per cent. of the average daily weight on all of the routes affected. The Department construed them to mean that it was enough if the diversion amounted to the ten per cent. on any one of the routes. The first interpretation that occurs to a reader may be that the routes are considered separately and that no readjustment shall be made in respect of any route unless the diversion on the route equals ten per cent. But the routes mentioned are supposed to be all affected by the same diversion and therefore are considered collectively. If a readjustment is made as to one route it is reasonable to take into account the offsets on others arising from the same change. That being so there is a literal plausibility in the railroad's contention—but having in mind what we have suggested to be the only purpose of the requirement, we are disposed to accept the construction adopted by the Department and the Court of Claims, that the statute denies a readjustment only if the diverted mails do not equal ten per cent. of the average daily weight upon any, that is, upon some one of the routes. If the proviso had meant them to amount to ten per cent. upon all the routes, "all" not "any" is the word that naturally would have been used.

Judgment affirmed.

EX PARTE IN THE MATTER OF HUSSEIN LUTFI BEY, MASTER OF THE GUL DJEMAL, PETITIONER.

MOTION FOR LEAVE TO FILE PETITION FOR A WRIT OF PROHIBITION AND A WRIT OF MANDAMUS.

No. —, Original. Motion submitted February 28, 1921.—Decided June 6, 1921.

1. The questions whether a ship of a foreign government, which it uses and operates as a merchant vessel, is, within the waters of the United States, immune from process in admiralty suits to enforce claims for wharfage and supplies, and whether such immunity properly can be claimed for a ship of a government which has severed and not resumed diplomatic relations with the United States, are debatable questions. P. 618.
2. The granting or refusal of the writs of prohibition and mandamus to restrain and correct alleged excesses of jurisdiction by the District Court in admiralty, is discretionary when the jurisdiction of that court is debatable. P. 619.

Leave denied.

THE facts are stated in the opinion, *post*, 618.

Mr. John M. Woolsey, *Mr. Frank J. McConnell* and *Mr. William A. Purrington*, for petitioner:

There is not any other available remedy than that now sought from this court.

The order sustaining the exceptions to the plea in abatement and overruling the plea is not a final order and, hence, is not appealable to the Circuit Court of Appeals. *Montgomery* v. *Anderson*, 21 How. 386; *Cushing* v. *Laird*, 107 U. S. 69; *McLish* v. *Roff*, 141 U. S. 661; *Bender* v. *Pennsylvania Co.*, 148 U. S. 502; *Hohorst* v. *Hamburg-American Packet Co.*, 148 U. S. 262.

If it had been a final order it would not have been directly appealable to this court under § 238, Jud. Code,

because it does not involve the question of the jurisdiction of the court as a federal court, because the court has jurisdiction of the subject-matter of the suit.

The only question is the jurisdiction of any court over the steamship *Gul Djemal* in her present status, and that is a question of liability and not jurisdiction. *The Attualita*, 238 Fed. Rep. 909.

It is only questions of the jurisdiction of the court as a federal court that are directly appealable under § 238. *Louisville Trust Co.* v. *Knott*, 191 U. S. 225, 230; *United States* v. *Congress Construction Co.*, 222 U. S. 199; *Male* v. *Atchison, Topeka & Santa Fe Ry. Co.*, 240 U. S. 97.

It is not possible to obtain a writ of prohibition from the Circuit Court of Appeals. *Muir* v. *Chatfield*, 255 Fed. Rep. 24.

It is not possible to try a case of this kind and at the same time maintain the immunity which it is necessary to maintain in order to preserve the rights of the sovereign. A case cannot be tried without submitting to the jurisdiction of the court. The filing of a bond would at once waive immunity. *The Luigi*, 230 Fed. Rep. 493. It is only a sovereign or his representative that can claim sovereign immunity. *The Crimdon*, 35 T. L. R. 81, 82.

The relief herein prayed for is, therefore, appropriate and is apparently the only relief procurable.

There is ample precedent for the granting of a writ of prohibition in a case of this kind. *Smith* v. *Whitney*, 116 U. S. 167, 173; *In re Rice*, 155 U. S. 396, 402; *In re New York & Porto Rico S. S. Co.*, 155 U. S. 523, 531.

The first reported instance of a writ of prohibition in this court is, we believe, the case of *United States* v. *Peters*, 3 Dall. 121 (1795), in which the question raised was a question of immunity of an arrested corvette, *The Cassius*, belonging to the French Republic and in which the writ of prohibition was granted. To the same effect in principle are: *In re Baiz*, 135 U. S. 403; *In re Cooper*,

138 U. S. 404; *In re Cooper*, 143 U. S. 472; *Ex parte Indiana Transportation Co.*, 244 U. S. 456; *Ex parte Easton*, 95 U. S. 68, 77.

MR. JUSTICE VAN DEVANTER delivered the opinion of the court.

This is a motion for leave to file a petition for a writ of prohibition and a writ of mandamus. The circumstances leading up to the motion can be shortly stated. The Steamship *Gul Djemal*, now in the Port of New York, was arrested and is being held under process issued against her in several suits in admiralty in the District Court for that district. She is a merchant ship and came from Constantinople to New York under a time charterparty, for a purely commercial purpose, shortly before the suits were brought. The claims sought to be enforced in them amount to $80,585 and are for wharfage, fuel, supplies and other necessaries furnished to the ship at Gibraltar in the course of her voyage and at New York after her arrival. Her master, Hussein Lutfi Bey, appearing specially in the suits, applied to have her released from arrest, and in support of his application alleged that she was owned, manned and operated by the Turkish or Ottoman Government, that she therefore was not subject to the court's process and that he, as the representative and agent of that government, was her true and lawful bailee and as such entitled to her immediate possession. The court declined to order her release, and in the petition now proffered the master seeks a writ of prohibition forbidding further proceedings in the suits and a writ of mandamus commanding that the order denying his application be vacated and another entered releasing the ship. The questions involved are, first, whether the ship of a foreign government which it uses and operates as a merchant vessel is, when within the waters of the United States, immune from process in suits such as have

been described; and, secondly, whether such immunity properly can be claimed in respect of the ship of a government which has severed and not resumed diplomatic relations with the United States. Both questions are important and also new. Their proper solution is not plain but debatable. This is frankly recognized in the brief supporting the motion. Even in admiralty cases a writ of prohibition goes as a matter of right only where the absence of jurisdiction is plain. Where the jurisdiction is debatable the granting or refusal of the writ is discretionary. *Ex parte Muir*, 254 U. S. 522. It is not plain that there is an absence of jurisdiction here, for the question is an open one and of uncertain solution. On application to the State Department, it declined to ask the Attorney General to present to the District Court a suggestion avowing that the ship belonged to the Turkish or Ottoman Government and was immune from seizure. We regard the situation as one in which to refuse the writ would be a proper exercise of discretion. There are stronger reasons against granting a writ of mandamus.

Leave to file petition denied.

THE TEXAS COMPANY v. HOGARTH SHIPPING COMPANY, LTD., OWNER OF THE STEAMSHIP BARON OGILVY, ET AL.

CERTIORARI TO THE CIRCUIT COURT OF APPEALS FOR THE SECOND CIRCUIT.

No. 555. Argued January 26, 27, 1921.—Decided June 6, 1221.

1. A voyage charterparty for a vessel to be named, with no provision for a substitution, under which a vessel has been selected, is to be treated thenceforth as a contract for that particular vessel. P. 627.

2. Error in permitting the British Ambassador to intervene, as *amicus curiæ*, and to present a certificate avowing the requisition of the ship here in question as an act of his government, *held* not prejudicial. P. 629.
3. A British ship, owned by a British corporation, was subject to requisition by the British Government for war purposes while in British waters preparing for service under a voyage charterparty made in this country with an American corporation. Pp. 628, 631.
4. A telegraphic requisition treated as binding in the practice of the British Government, and followed by use of the ship as a government transport and compensation of the owner therefor, *held* valid. P. 628.
5. Where a ship is rendered unavailable for the performance of a charterparty by a valid requisition of government, not invited by the owner or provided for in the contract, for a service likely to extend (which in this case did extend) beyond the time for the projected charter voyage, the owner is excused from performance. P. 629.
6. The contract must be deemed to have been entered into subject to an implied condition that, in such an event, it should be at an end and the parties absolved from further liability under it. P. 631.

267 Fed. Rep. 1023, affirmed.

CERTIORARI to review a decree of the Circuit Court of Appeals affirming a decree of the District Court in admiralty. The facts are stated in the opinion, *post*, 625.

Mr. John W. Griffin for petitioner:

In the absence of a restraints-of-princes clause, the shipowner's obligation under the charterparty was absolute, and prevention by foreign law was not a defense.

Where a shipowner enters into an absolute covenant to carry a cargo, without protecting himself by exceptions, he is bound to perform it or to pay damages. An examination of the charter in suit shows that it contains no exception whatever applicable to the situation. *Spence* v. *Chodwick*, 10 Q. B. 517; *Jacobs* v. *Credit Lyonnais*, 12 Q. B. D. 589; *Howland* v. *Greenway*, 22 How. 491; *The Harriman*, 9 Wall. 161; *Blight* v. *Page*, 3 Bos. & P. 295; *Barker* v. *Hodgson*, 3 Maule & S. 267; *Northern Pacific*

Ry. Co. v. *American Trading Co.*, 195 U. S. 439; *Ashmore* v. *Cox*, L. R. [1899] 1 Q. B. D. 436; *Blackburn Bobbin Co.* v. *Allen*, [1918] 1 K. B. 540; *Sun Printing Association* v. *Moore*, 183 U. S. 642; *Carnegie Steel Co.* v. *United States*, 240 U. S. 156; *Chicago, Milwaukee & St. Paul Ry. Co.* v. *Hoyt*, 149 U. S. 1, 14; *Columbus Ry. Co.* v. *Columbus*, 249 U. S. 399, 412; *Dermott* v. *Jones*, 2 Wall. 1; *United States* v. *Gleason*, 175 U. S. 588, 602; *Jones* v. *United States*, 96 U. S. 24; *Berg* v. *Erickson*, 234 Fed. Rep. 817; *Rederiaktiebolaget Amie* v. *Universal Transportation Co.*, 250 Fed. Rep. 400; *Richards* v. *Wreschner*, 174 App. Div. 484; *Aktieselskabet Frank* v. *Namqua Copper Co.*, 36 T. L. R. 438. *Furness, Withy & Co.* v. *Rederi Banco* [1917] 2 K. B. 873, distinguished.

The law has long been settled to the effect that, where there is an absolute obligation, difficulty or even impossibility of performance is no defense, except in cases of personal disability preventing performance of a contract for personal service, destruction of the subject-matter upon the continued existence of which the contract depends, and prohibition by domestic law.

The ship did not *cease to exist*, any more than if she had been delayed by stranding or by collision, or by any other obstacle. She was merely subjected to a restraint (assuming that the requisition was valid) of a kind not excepted in the charter and not permanent in its nature. Such a situation cannot be treated as an instance of destruction of the subject-matter of the contract. It is simply a case where performance has been rendered impossible for the moment by foreign law.

The case presents merely another instance of prevention by foreign law of the performance of an American contract—the same situation which has been so often and so uniformly dealt with by the courts both of this country and of England. 8 Elliott on Contracts, par. 1891; 2 Parsons, Contracts, 9th ed., p. 828; Leake, Contracts,

6th ed., p. 510; Wald's Pollock on Contracts, 3d ed., p. 530; Williston, Sales, § 661; Scrutton on Charter-Parties, 9th ed., p. 11; *Richards* v. *Wreschner*, 174 App. Div. 484; *Kirk* v. *Gibbs*, 1 H. & N. 810; *Barker* v. *Hodgson*, 3 M. & S. 267; *Gates* v. *Goodloe*, 101 U. S. 612; *Benson* v. *Atwood*, 13 Maryland, 20; *Clifford* v. *Watts*, L. R. 5 C. P. 577, 586; *Hore* v. *Whitmore*, 2 Cowp. 784; *Atkinson* v. *Ritchie*, 10 East, 530; *Blight* v. *Page*, 3 B. & P. 295; *Sjoerds* v. *Luscombe*, 16 East, 201; *Jacobs* v. *Credit Lyonnais*, 12 Q. B. D. 589; *Blackburn Bobbin Co.* v. *Allen*, [1918] 1 K. B. 540; *Trinidad Shipping Co.* v. *Alston & Co.*, [1920] A. C. 888; *Duff* v. *Lawrence*, 3 Johns. Cas. 162; *Holyoke* v. *Depew*, 2 Ben. 334; *Beebe* v. *Johnson*, 19 Wend. 500; *Ye Seng Co.* v. *Corbitt*, 9 Fed. Rep. 423; *Tweedie Trading Co.* v. *McDonald Co.*, 114 Fed. Rep. 985; *Spence* v. *Chodwick*, 10 Q. B. 517; *Swayne & Hoyt* v. *Everett*, 255 Fed. Rep. 71; *Taylor* v. *Taintor*, 16 Wall. 366.

The foregoing authorities indicate what has always been considered clear law—that, in the absence of an exception in the contract, the interference of a foreign government preventing the performance of the contract is not a legal excuse. This is well settled both in England and in this country.

The District Court sought to bring the present case within the authorities by calling it a case where the vessel had become non-existent. This is a mere figure of speech. It might equally well be said that, whenever the act of a foreign government prevents the loading of a cargo, that cargo is non-existent, and yet in case after case it has been held that liability exists under such circumstances. Indeed, any case of impossibility might be stated in the same sort of figurative language. Where there is truly destruction of the subject-matter, a peculiar situation is created, with which the law usually deals by declaring, as the fairest solution, that the contract is annulled. But where, the subject-matter being intact, an obstacle arises to performance by one party, the question is: Is the nature

of the obstacle such that, under the law or according to the provisions of the contract, the default is excused?

There was no frustration of the charter. If the doctrine of frustration is applied to cases where performance is prevented by foreign law, then either the general rule must be overturned (which is inconceivable) or else such cases must be treated as exceptional, and a new rule of law must be established to cover them.

The doctrine of frustration appears to be an effort to correct what, in some cases, has been regarded as the injustice of enforcing a contract under circumstances fundamentally different from those which the parties foresaw or could reasonably have been expected to foresee. The court in effect makes for the parties a new contract; or, perhaps more accurately, declines to enforce, for equitable reasons, the contract which the parties themselves have made.

Only in a case of the plainest need should such a remedy be applied, and it should never be applied to a case where the parties must have had the contingency in contemplation and simply failed to provide for it. Under those circumstances, it is submitted, no court can annul this or any other contract.

The so-called doctrine of frustration is really new in name rather than in nature. Nearly all the cases are simply instances of the well recognized types of impossibility. No court has held a contract frustrated unless the obstacle clearly appeared to be such as necessarily to postpone the performance of the contract beyond the time when it would be fair or reasonable to require the parties to perform it. Citing and applying or distinguishing the following: *Allanwilde Transport Corporation* v. *Vacuum Oil Co.*, 248 U. S. 377; *The Kronprinzessin Cecilie*, 244 U. S. 12; *Columbus Railway Co.* v. *Columbus*, 249 U. S. 399; *The Claveresk*, 264 Fed. Rep. 276; *The Isle of Mull*, 257 Fed. Rep. 798; *Lewis* v. *Mowinckel*, 215 Fed. Rep. 710; *Admiral*

Shipping Co. v. *Weidner & Co.*, [1916] 1 K. B. 429; *Jackson* v. *Union Marine Ins. Co.*, L. R. 8 C. P. 572; L. R. 10 C. P. 125; *Bank Line* v. *Capel & Co.*, [1919] A. C. 435; *Tamplin S. S. Co.* v. *Anglo-Mexican Co.*, [1916] 2 A. C. 397; *Geipel* v. *Smith*, L. R. 7 Q. B. 404; *Scottish Navigation Co.* v. *Stouter & Co.*, [1917] 1 K. B. 222; *Countess of Warwick S. S. Co.* v. *Nickel Societe Anonyme*, [1918] 1 K. B. 372; *Modern Transp. Co.* v. *Duneric S. S. Co.*, [1917] 1 K. B. 370; *Chinese Mining Co.* v. *Sale*, [1917] 2 K. B. 599; *Millar & Co.* v. *Taylor & Co.*, 32 T. L. R. 161; L. R. [1916] 1 K. B. 402; *Austin Baldwin & Co.* v. *Turner & Co.*, 36 T. L. R. 769; *Lloyd Royal Belge* v. *Stathatos*, 33 T. L. R. 390; 34 T. L. R. 70; *Blackburn Bobbin Co.* v. *Allen Co.*, [1918] 1 K. B. 540; 2 K. B. 467; *Hudson* v. *Hill*, 2 Asp. M. C. 278; *Jones* v. *Holm*, 2 Ex. 335; *The Progreso*, 50 Fed. Rep. 835; *The Star of Hope*, 1 Hask. 36; *Hadley* v. *Clarke*, 8 Term. Rep. 259; *The Patria*, L. R., 3 A. & E. 436; *Hurst* v. *Usborn*, 25 L. J. C. P. 208; *Assicurozioni Generali & Co.* v. *Bessie Morris S. S. Co.*, [1892] 2 Q. B. 652; *Clark* v. *Massachusetts Fire Insurance Co.*, 2 Pick. 104; *In re Shipton, Anderson & Co.*, [1915] 3 K. B. 676; *Nickoll & Knight* v. *Ashton, Edridge & Co.*, [1901] 2 K. B. 126; *Taylor* v. *Caldwell*, 3 B. & S. 826; *Metropolitan Water Board* v. *Dick, Kerr & Co.*, [1918] A. C. 128.

In order to succeed under the facts of this case, the owners must establish that the mere fact of requisition, *ipso facto* and without more, as matter of law, terminated the charter. Without an exception, without proof of the probable length of the requisition, without any facts in the record from which the court can reach a conclusion about its probable length, there is nothing here but the mere fact that the vessel was requisitioned. No case has ever held that this alone is enough to accomplish frustration; numerous cases have held the contrary.

The alleged requisition was not a legally valid requisition. The diplomatic officers of a foreign government cannot, by

ex parte statements, preclude the courts of the United States from ascertaining the true facts with regard to it; nor should the courts of the United States receive or act on such statements, at least unless made through and with the sanction of the Department of State.

Whether or not the requisition was valid, the employment of the *Baron Ogilvy* from April to October, 1915, was not under any requisition but under a voluntary charter, and the certificate of the British Embassy should not be construed as contradicting this undisputed fact.

The respondents, after the happening of the alleged requisition, did not make efforts to secure the release of the vessel or to substitute other tonnage.

Mr. John M. Woolsey for respondents.

Mr. Frederic R. Coudert and *Mr. Howard Thayer Kingsbury*, by leave of court, filed a brief on behalf of the British Embassy as *amicus curiæ*.

MR. JUSTICE VAN DEVANTER delivered the opinion of the court.

This is a suit in admiralty to recover damages for an alleged breach of a voyage charterparty entered into in New York, February 6, 1915, between a British corporation, which owned the *Baron Ogilvy* and other freight ships, and a Texas corporation, which was engaged in shipping and marketing petroleum products. The charterparty did not name a particular ship as the subject of the hiring, but required that one of a certain type be designated from among the ships of the British company, on or before March 15. In due time that company named the *Baron Ogilvy* and the Texas company assented. The intended voyage was from a port in Texas to another in South Africa with a full cargo of refined petroleum in cases. The ship was to be tendered at the initial port ready to load between April 15 and May 15, 1915, and in case of

default the Texas company was given the option of canceling or maintaining the charterparty. If the vessel was then at that port, the option was to be exercised at once and if she was not then there, it was to be exercised within twenty-four hours after her arrival. There was no clause expressly excepting restraints of princes, etc. April 10, 1915, the *Baron Ogilvy*, while in British waters and being provisioned for the intended voyage, was requisitioned by the British Government and pressed into its war service, in which she continuously was retained until October 20, following. On April 12 the British company notified the Texas company that the vessel had been requisitioned and therefore would not be available to carry out the charterparty. The Texas company thereupon procured another vessel to make the voyage at the time intended, but at an increased freight rate, and subsequently brought this suit against the British company on the theory that the latter had broken the charterparty and was liable in damages for the difference between the rate which it was to receive and that actually paid to the other vessel. On the final hearing the District Court rendered a decree for the respondent, the principal grounds of the decision being (a) that when in accordance with the terms of the charterparty the *Baron Ogilvy* was named as the ship to make the voyage the contract became an ordinary voyage charterparty for that ship, and none other, and (b) that that ship, before the time for the voyage, was taken *in invitum* by the owner's government for war use for a period likely to extend beyond the time for the intended voyage and that this dissolved the charterparty and excused the owner from furnishing the ship. 265 Fed. Rep. 375. The decree was affirmed by the Circuit Court of Appeals, 267 Fed. Rep. 1023; and a writ of certiorari brings the case here. 254 U. S. 625.

We agree that after the designation of the *Baron Ogilvy*,

conformably to a provision in the charterparty, every element of an ordinary voyage charterparty for a particular ship was present. It was then as if that vessel had been named at the outset. And, as there was no provision for substituting another ship, there was no obligation on the part of the owner to furnish, nor on the part of the charterer to accept, another. *Nickoll & Knight* v. *Ashton, Edridge & Co.*, [1901] 2 K. B. 126, 131. The contract related to a particular ship just as it related to a particular voyage. Neither could be changed without departing from the contract, which could not be done without the consent of both parties.

The libelant challenges the good faith of the owner and seeks by taking mere fragments of the evidence here and there to show that the owner invited the requisition, welcomed it as promising a better return than the charterparty, and in effect voluntarily turned the vessel over to the government. But the fragments to which attention is invited must be read with the context and all the evidence must be considered. When this is done it becomes very plain that there is no basis for the challenge. The owner made the usual preparations for complying with the charterparty, earnestly sought to prevent the requisitioning of the vessel, urged the existence of the charterparty as a reason for leaving her free, and respected the requisition, when made, because no other course was reasonably open. It may not be material, but in fact the charterparty gave promise of a better return and called for a service which would be less hazardous. The vessel was taken by the government for the use to which she was subjected and after the taking the owner agreed to furnish certain additional facilities by reason of which a higher compensation was obtained than otherwise would have been allowed. Beyond this the owner was accorded no voice in the matter.

As the ship was British and in British waters and the

owner was a British corporation the power of the British Government to requisition the ship is beyond question. But the libelant insists that those who assumed to exert this power did not proceed in the mode prescribed and therefore that the requisition was invalid. The facts adequately proved are as follows: A Royal Proclamation of August 3, 1914, authorized and empowered the Lords Commissioners of the Admiralty "by warrant under the hand of their Secretary" "to requisition and take up" British vessels within British waters for use as transports and auxiliaries. The *Baron Ogilvy* was requisitioned by an order of the Lords Commissioners and the order was communicated to the owner by a telegram signed "Transports" and saying: "SS. *Baron Ogilvy* is requisitioned under Royal Proclamation for government service." The telegram was sent by the Assistant Director of Military Sea Transports, the officer through whom requisitioning orders were executed. This was the usual mode of communicating such orders. Formal warrants never were issued. Generally, the telegraphic communication was followed, after a time, by a letter of like import bearing a block (printed) signature of the Secretary; but in this instance, through an error in office routine, no letter was sent. These letters were intended to be corroborative, but were not deemed essential; and in actual practice the Lords Commissioners and those who executed their orders proceeded on the theory that the ship was taken when the order was received by the owner, however the order was communicated, and that a telegraphic communication of it was effective and must be obeyed. Indeed, the evidence is that if the telegraphic order was not obeyed the vessel would be taken by force. The owner here—six of whose ships had been requisitioned theretofore—so understood the practice and respected the order. It does not appear that the government at any time or in any way disapproved of the practice, but does appear that in

this instance the government treated the telegraphic order as effective by using the ship as a transport for more than six months and compensating the owner accordingly. In these circumstances, the contention that the requisition was invalid is quite untenable. Whether in different circumstances it could and should be pronounced invalid here we need not consider. See *Underhill* v. *Hernandez*, 168 U. S. 250; *American Banana Co.* v. *United Fruit Co.*, 213 U. S. 347; *Oetjen* v. *Central Leather Co.*, 246 U. S. 297, 303, 304; *Ricaud* v. *American Metal Co.*, 246 U. S. 304, 309; *Northern Pacific Ry. Co.* v. *American Trading Co.*, 195 U. S. 439, 467–468.

In the District Court the British Ambassador was permitted to intervene as *amicus curiæ*, object to the adjudication of the libelant's claim and present a certificate avowing that the requisition was a governmental act. Complaint is made of this. The permission was improvidently granted, as was afterwards indicated by this court in other cases. *Ex parte Muir*, 254 U. S. 522; *The Pesaro*, 255 U. S. 216. But the libelant was not prejudiced, for the intervention and certificate ultimately were not considered and the decree was rested on the evidence otherwise presented.

Finally, the libelant insists that the requisition, even if valid and not invited by the owner, did not operate to dissolve the charterparty or to excuse the owner from performing it. The courts below held otherwise, and we think rightly so.

It long has been settled in the English courts and in those of this country, federal and state, that where parties enter into a contract on the assumption that some particular thing essential to its performance will continue to exist and be available for the purpose and neither agrees to be responsible for its continued existence and availability, the contract must be regarded as subject to an implied condition that, if before the time for performance

and without the default of either party the particular thing ceases to exist or be available for the purpose, the contract shall be dissolved and the parties excused from performing it. *Taylor* v. *Caldwell*, 3 Best & Smith, 826, 839; *In re Shipton, Anderson & Co.* [1915] 3 K. B. 676; *Horlock* v. *Beal* [1916] 1 A. C. 486, 494, 496, 512; *Bank Line, Ltd.*, v. *Arthur Capel and Co.* [1919] A. C. 435, 445; *The Tornado*, 108 U. S. 342, 349–351; *Chicago, Milwaukee, & St. Paul Ry. Co.* v. *Hoyt*, 149 U. S. 1, 14–15; *Wells* v. *Calnan*, 107 Massachusetts, 514; *Butterfield* v. *Byron*, 153 Massachusetts, 517; *Dexter* v. *Norton*, 47 N. Y. 62; *Clarksville Land Co.* v. *Harriman*, 68 N. H. 374; *Emerich Co.* v. *Siegel, Cooper & Co.*, 237 Illinois, 610. The principle underlying the rule is widely recognized and applied to various classes of contracts. *The Kronprinzessin Cecilie*, 244 U. S. 12, 22–24. But, of course, it does not apply where the risk is fully covered by a term of the contract, nor where performance is not practically cut off but only rendered more difficult or costly. *Columbus Railway, Power & Light Co.* v. *Columbus*, 249 U. S. 399, 410; *et seq.* Perhaps the oldest and most familiar application of the principle is to contracts for personal service, where performance is prevented by death or illness. *Robinson* v. *Davison*, (1871) L. R. 6 Exch. 269; *Spalding* v. *Rosa*, 71 N. Y. 40. Another application widely recognized is where a ship chartered for a voyage, after the date of the charter-party and before the time for the voyage, is accidentally destroyed by fire, lost at sea, or injured in such degree as not to be available for the service. *The Tornado, supra*, was a suit on a contract of affreightment where the ship, before beginning the voyage, was accidentally burned and thereby prevented from undertaking it. This court held that the contract was dissolved, saying, p. 349:

"We are of opinion that by the disaster which occurred before the ship had broken ground or commenced to earn freight, the circumstances with reference to which the

contract of affreightment was entered into were so altered by the supervening of occurrences which it cannot be intended were within the contemplation of the parties in entering into the contract, that the shipper and the underwriters were absolved from all liability under the contract of affreightment. The contract had reference to a particular ship, to be in existence as a seaworthy vessel and capable of carrying cargo and earning freight and of entering on the voyage. All the fundamental conditions forming part of the contract of the ship-owner were wanting at the time when the earning of freight could commence."

Here the ship, although still in existence and entirely seaworthy, was rendered unavailable for the performance of the charterparty by the requisition. By that supervening act she was impressed into the war service of the British Government for a period likely to extend—and which as it turned out did extend—long beyond the time for the charter voyage. In other words, compliance with the charterparty was made impossible by an act of state, the charterer was prevented from having the service of the ship and the owner from earning the stipulated freight. The event apparently was not anticipated and there was no provision casting the risk on either party. Both assumed that the ship would remain available and that was the basis of their mutual engagements. These, we think, must be regarded as entered into on an implied condition that, if before the time for the voyage the ship was rendered unavailable by such a supervening act as the requisition, the contract should be at an end and the parties absolved from liability under it.

That the charterparty was entered into in this country is not material. The important consideration is that it became impossible of performance through a supervening act of state which operated directly on the ship and the parties could not avoid.

Decree affirmed.

UNITED STATES *v.* WOODWARD ET AL., EXECUTORS OF WOODWARD.

APPEAL FROM THE COURT OF CLAIMS.

No. 811. Argued April 18, 1921.—Decided June 6, 1921.

The Revenue Act of 1918, Title II, taxes by fixed percentages the net income "received by estates of deceased persons during the period of administration or settlement," and provides that the net income shall be ascertained by making from the gross income, as defined, certain deductions, including "taxes paid or accrued within the taxable year imposed by the authority of the United States, except income, war-profits and excess-profits taxes."

Held: (1) That "estate taxes," imposed by the Revenue Act of 1916, are among the taxes deductible. (See *New York Trust Co.* v. *Eisner*, *ante*, 345.) P. 634.

(2) That an estate tax "accrued" when, by the terms of the Act of 1916, it became due, *viz.*, one year from the decedent's death; and, when paid by executors after the income tax year in which it accrued but before their return of income for that year was made or required, was properly deducted. P. 635.

56 Ct. Clms. 133, affirmed.

THE case is stated in the opinion.

The Solicitor General and *Mr. Frank Davis, Jr.*, Special Assistant to the Attorney General, for the United States.

Mr. E. J. Smyer for appellees.

MR. JUSTICE VAN DEVANTER delivered the opinion of the court.

This is an appeal from a judgment in favor of the executors of Joseph H. Woodward, deceased, for money

claimed to have been erroneously exacted from them as a tax on the income of his estate while in their hands.

The testator died December 15, 1917. The Revenue Act of 1916 [1] "imposed upon the transfer of the net estate of every decedent " dying thereafter a tax which it called an "estate tax." The act fixed the amount of the tax at a named percentage "of the value of the net estate," made the tax a lien upon the "entire gross estate," required that it be paid "out of the estate " before distribution, declared that it should "be due one year after the decedent's death," charged the executor or administrator with the duty of paying it, and declared that the receipt therefor should entitle him to a credit for the amount in the usual settlement of his accounts. Under that act these executors were required to pay an estate tax of $489,834.07. The tax became due December 15, 1918, and they paid it February 8, 1919. Shortly thereafter the executors made a return, under the Revenue Act of 1918,[2] of the income of the testator's estate for the taxable year 1918 and claimed in the return that in ascertaining the net income for that year the estate tax of $489,834.07 should be deducted. The Commissioner of Internal Revenue refused to allow the deduction and assessed an income tax of $165,075.78 against the estate. Had the deduction been allowed there would have been no taxable net income for that year and no part of the $165,075.78 would have been collectible. Payment of that sum, as so assessed, was pressed on the executors and they paid it under duress. Then, after taking the necessary steps to entitle them to do so, they brought this suit in the Court of Claims to recover the money thus exacted from them.

The sole question for decision is, was the estate tax

[1] C. 463, Title II, 39 Stat. 777; c. 159, Title III, 39 Stat. 1002; c. 63, Title IX, 40 Stat. 324.

[2] C. 18, Title II, §§ 210-214, 219, 1405, 40 Stat. 1062-1067, 1071, 1151.

paid by the executors, and claimed by them as a deduction in the income tax return for the year 1918, an allowable deduction in ascertaining the net taxable income of the estate for that year? The Court of Claims held that it was. 56 Ct. Clms. 133.

The solution of the question turns entirely upon the statutory provisions under which the two taxes were severally collected. The Act of 1918, by §§ 210, 211 and 219, subjects the net income "received by estates of deceased persons during the period of administration or settlement" to an income tax measured by fixed percentages thereof; by §§ 212 and 219 requires that the net income be ascertained by taking the gross income, as defined in § 213, and making the deductions named in § 214, and by § 214 makes express provision for the deduction of "taxes paid or accrued within the taxable year imposed (a) by the authority of the United States, except income, war-profits and excess-profits taxes." This last provision is the important one here. It is not ambiguous, but explicit, and leaves little room for construction. The words of its major clause are comprehensive and include every tax which is charged against the estate by the authority of the United States. The excepting clause specifically enumerates what is to be excepted. The implication from the latter is that the taxes which it enumerates would be within the major clause were they not expressly excepted, and also that there was no purpose to except any others. Estate taxes were as well known at the time the provision was framed as the ones particularly excepted. Indeed, the same act, by §§ 400–410, expressly provides for their continued imposition and enforcement. Thus their omission from the excepting clause means that Congress did not intend to except them.

The Act of 1916 calls the estate tax a "tax" and particularly denominates it an "estate tax." This court recently has recognized that it is a duty or excise and is

imposed in the exertion of the taxing power of the United States. *New York Trust Co.* v. *Eisner, ante,* 345. It is made a charge on the estate and is to be paid out of it by the administrator or executor substantially as other taxes and charges are paid. It becomes due not at the time of the decedent's death, as suggested by counsel for the Government, but one year thereafter, as the statute plainly provides. It does not segregate any part of the estate from the rest and keep it from passing to the administrator or executor for purposes of administration, as counsel contend, but is made a general charge on the gross estate and is to be paid in money out of any available funds or, if there be none, by converting other property into money for the purpose.

Here the estate tax not only "accrued," which means became due, during the taxable year of 1918, but it was paid before the income for that year was returned or required to be returned. When the return was made the executors claimed a deduction by reason of that tax. We hold that under the terms of the Act of 1918 the deduction should have been allowed.

Judgment affirmed.

MERCHANTS' NATIONAL BANK OF RICHMOND, VIRGINIA, v. CITY OF RICHMOND.

ERROR TO THE SUPREME COURT OF APPEALS OF THE STATE OF VIRGINIA.

No. 240. Argued March 21, 1921.—Decided June 6, 1921.

1. A judgment of a state supreme court sustaining a state statute and a city ordinance imposing taxes, over the objection that as construed and applied they are repugnant to a law of the United States, is reviewable here by writ of error. P. 637.

2. Where the state court omits to find the facts relevant to a question of federal law, it is the duty of this court to examine the evidence on the subject. P. 638.
3. In the provision of Rev. Stats., § 5219, respecting state taxation of shares of national banks, that it "shall not be at a greater rate than is assessed upon other moneyed capital in the hands of individual citizens of such State," the words "moneyed capital in the hands of individual citizens" include bonds, notes and other evidences of indebtedness in the hands of individuals, which are shown to come materially into competition with the national banks in the loan market. P. 638.

124 Virginia, 522, reversed; application for writ of certiorari denied.

THE case is stated in the opinion.

Mr. Legh R. Page, with whom *Mr. E. Warren Wall* was on the briefs, for plaintiff in error.

Mr. H. R. Pollard and *Mr. George Wayne Anderson*, for defendant in error, submitted.

MR. JUSTICE PITNEY delivered the opinion of the court.

The court of last resort of Virginia sustained a tax assessed by the City of Richmond in the year 1915, in form against plaintiff in error, a national banking association, in substance and effect against its shareholders, overruling a contention based upon the Constitution and laws of the United States. To review its judgment a writ of error has been sued out and allowed, and application has been made also for the allowance of a writ of certiorari. The proceeding originated in the Hustings Court of the City of Richmond with a petition filed by the Bank against the City to correct the assessment as erroneous. The first hearing resulted in an order granting the relief prayed for, upon grounds not now material; but, upon review by the Supreme Court of Appeals this was reversed (124 Virginia, 522), and the case remanded

for further proceedings in conformity with the views of that court; in consequence of which, correction of the alleged erroneous assessment was refused by the trial court, and the proceeding dismissed. An application for a writ of error to review this judgment was denied by the Supreme Court of Appeals, with the effect of affirming the judgment of the Hustings Court.

The tax was imposed pursuant to an ordinance approved April 9, 1915, passed under the powers conferred upon the City by its charter and an act of the General Assembly approved March 15, 1915 (Virginia Acts 1915, c. 85, p. 119). The opinion of the court of last resort shows that plaintiff in error drew in question the validity of the ordinance and statute, as construed and applied, upon the ground of their alleged repugnance to § 5219, Rev. Stats., and that the court sustained their validity notwithstanding. Under § 237, Jud. Code, as amended by Act of September 6, 1916, c. 448, 39 Stat. 726, a writ of error is the appropriate process for reviewing the final judgment in this court, and the petition for allowance of a writ of certiorari will be denied.

It will not be necessary to recite the provisions of the statute and ordinance, beyond saying that, taken in connection with another act of the General Assembly, approved March 17, 1915 (Virginia Acts 1915, c. 117, p. 160), they authorized the imposition for the year 1915 upon bank stocks, state and national, of a tax for state purposes at the rate of 35 cents and a tax for city purposes at the rate of $1.40—a total of $1.75—upon the $100 of valuation, while upon intangible personal property in general, including bonds, notes, and other evidences of indebtedness, the state rate was 65 cents and the city rate 30 cents, an aggregate of 95 cents, upon each $100 of valuation.

The Bank's petition alleged, and the evidence showed without dispute, that in the City of Richmond, in 1915,

city and state taxes at the rates first mentioned were imposed upon national bank stocks (including that of plaintiff in error) to the aggregate value of more than $8,000,000 and stocks of state banks and trust companies to the value of $6,000,000 and upwards, while taxes at the lower aggregate rate of 95 cents per $100—city tax 30 cents, state tax 65 cents—were imposed for the same year upon bonds, notes, and other evidences of indebtedness aggregating $6,250,000. It is to be inferred that a substantial part of this aggregate was in the hands of individual taxpayers; the precise amount does not appear. It also was shown by evidence without dispute that moneyed capital in the hands of individuals invested in bonds, notes, and other evidences of indebtedness comes into competition with the national banks in the loan market.

Neither of the state courts passed upon this evidence or made findings of fact thereon; doubtless because, under their respective views of the applicable law, the facts referred to were immaterial. But this omission does not relieve us of the duty of examining the evidence for the purpose of determining what facts reasonably might be, and presumably would be, found therefrom by the state court, if plaintiff in error's contention upon the question of federal law should be sustained, and the facts thereby shown to be material. *Carlson* v. *Curtiss*, 234 U. S. 103, 106.

The Supreme Court of Appeals entertained the view that the purpose of § 5219, Rev. Stats., was confined to the prevention of discrimination by the States in favor of state banking associations as against national banking associations, and that since none such is shown here there was no repugnance to the federal statute. This, however, is too narrow a view of § 5219. It traces its origin to § 41 of the Act of June 3, 1864, c. 106, 13 Stat. 99, 111–112, in which, besides the restriction that state taxation of the shares of national banking associations should not be at a

greater rate than that assessed upon other moneyed capital in the hands of individual citizens of such State, there was an express proviso that the tax should not exceed the rate imposed upon the shares of state banks. But this was modified by Act of February 10, 1868, c. 7, 15 Stat. 34, in a manner which, as was pointed out in *Boyer* v. *Boyer*, 113 U. S. 689, 691–692, precluded the possibility of an interpretation permitting the States, while imposing the same taxation upon national bank shares as upon shares in state banks, to discriminate against national bank shares in favor of moneyed capital not invested in state bank stock. "At any rate," said the court, "the acts of Congress do not now permit any such discrimination." In the amended form the provision was carried into the Revised Statutes as § 5219, which prescribes that state taxation of shares in the national banks "shall not be at a greater rate than is assessed upon other moneyed capital in the hands of individual citizens of such State."

By repeated decisions of this court, dealing with the restriction here imposed, it has become established that, while the words "moneyed capital in the hands of individual citizens" do not include shares of stock in corporations that do not enter into competition with the national banks, they do include something besides shares in banking corporations and others that enter into direct competition with those banks. They include not only moneys invested in private banking, properly so called, but investments of individuals in securities that represent money at interest and other evidences of indebtedness such as normally enter into the business of banking. In *Evansville Bank* v. *Britton*, 105 U. S. 322, 324, the court said: "The act of Congress does not make the tax on personal property the measure of the tax on bank shares in the State, but the tax on moneyed capital in the hands of the individual citizens. Credits, money loaned at interest, and demands against persons or corporations

are more purely representative of moneyed capital than personal property, so far as they can be said to differ. Undoubtedly there may be much personal property exempt from taxation without giving bank shares a right to similar exemption, because personal property is not necessarily moneyed capital. *But the rights, credits, demands, and money at interest mentioned in the Indiana statute, from which bona fide debts may be deducted, all mean moneyed capital invested in that way.* . . . We are of opinion that the taxation of bank shares by the Indiana statute, without permitting the shareholder to deduct from their assessed value the amount of his *bona fide* indebtedness, as in the case of other investments of moneyed capital, is a discrimination forbidden by the act of Congress."

And in *Mercantile Bank* v. *New York*, 121 U. S. 138, the court, speaking by Mr. Justice Matthews, after reviewing previous decisions and pointing out (p. 154) the policy and purpose of the act as the key to its proper interpretation, proceeded to declare (p. 157): "The terms of the act of Congress, therefore, include shares of stock or other interests owned by individuals in all enterprises in which the capital employed in carrying on its business is money, where the object of the business is the making of profit by its use as money. The moneyed capital thus employed is invested for that purpose in securities by way of loan, discount, or otherwise, which are from time to time, according to the rules of the business, reduced again to money and reinvested. *It includes money in the hands of individuals employed in a similar way, invested in loans, or in securities for the payment of money, either as an investment of a permanent character, or temporarily with a view to sale or repayment and reinvestment.* In this way the moneyed capital in the hands of individuals is distinguished from what is known generally as personal property, "—proceeding then to quote the passage we have cited from *Evansville Bank* v. *Britton, supra.*

In *Amoskeag Savings Bank* v. *Purdy*, 231 U. S. 373, 390–391, the above-mentioned declaration of the court in *Mercantile Bank* v. *New York*, 121 U. S. 138, 157, including the citation from *Evansville Bank* v. *Britton*, was repeated, and it was pointed out that the rule of construction thus laid down had since been consistently adhered to. No decision of this court to which our attention is called has qualified that rule, or construed § 5219 as leaving out of consideration the rate of state taxation imposed upon moneyed capital in the hands of individual citizens invested in loans or securities for the payment of money, either for permanent or temporary purposes, where such moneyed capital comes into competition with that of the national banks. Thus, in *Bank of Commerce* v. *Seattle*, 166 U. S. 463, 464, the precise ground of decision was the want of a showing that "the moneyed capital left unassessed was, as to any material portion thereof, moneyed capital coming into competition with that of national banks." To the same effect *First National Bank of Wellington* v. *Chapman*, 173 U. S. 205, 219. In the present case, there is a clear showing of such competition, relatively material in amount, and it follows that, upon the undisputed facts, the ordinance and statute under which the stock of plaintiff in error was assessed, as construed and applied, exceeded the limitation prescribed by § 5219, Rev. Stats., and hence that the tax is invalid.

Application for writ of certiorari denied.

Judgment reversed, and the cause remanded for further proceedings not inconsistent with this opinion.

MR. JUSTICE BRANDEIS dissents.

BOWMAN, ATTORNEY GENERAL OF THE STATE OF NEW MEXICO, ET AL. *v.* CONTINENTAL OIL COMPANY.

APPEAL FROM THE DISTRICT COURT OF THE UNITED STATES FOR THE DISTRICT OF NEW MEXICO.

No. 695. Argued April 14, 1921.—Decided June 6, 1921.

A statute of New Mexico (Laws 1919, c. 93, p. 182), applicable to distributers of gasoline, imposes an excise of 2 cents for each gallon sold or used, and an annual license tax of $50.00, payable in advance, for each distributing station, place of business or agency; and makes it a penal offense to carry on the business without paying the license tax. *Held:*—.

(1) That the excise provision, assuming it intended to include both interstate and domestic transactions, is not therefore void *in toto* in its application to a distributer engaged in both, since, the subject-matter being separable, full protection can be afforded by enjoining enforcement as to the interstate business. P. 646.

(2) But that the license tax, falling with its prohibition upon the business as a whole, cannot constitutionally be applied where interstate and intrastate business necessarily are conducted indiscriminately at the same stations and by the same agencies. P. 647.

(3) That gasoline imported by the distributer from another State but used in the conduct of its business, loses its interstate character and may be subjected to the excise, consistently with the Commerce Clause. P. 648.

(4) That the tax upon the use is not a tax on tangible property, within the meaning of § 1 of Article VIII of the New Mexico constitution, but in effect, as in name, an excise tax, and conforms to the requirement of that section that taxes shall be equal and uniform upon subjects of taxation of the same class. P. 649.

(5) The excise tax, as applied to local sale and use of gasoline by a distributer, is consistent with the due process and equal protection clauses of the Fourteenth Amendment. P. 649.

Reversed.

THE case is stated in the opinion.

Mr. Harry S. Bowman, Attorney General of the State of New Mexico, with whom *Mr. A. B. Renehan* was on the brief, for appellants.

Mr. Charles R. Brock and *Mr. E. R. Wright*, with whom *Mr. Stephen B. Davis, Jr.*, *Mr. Milton Smith*, *Mr. W. H. Ferguson* and *Mr. Elmer L. Brock* were on the briefs, for appellee.

MR. JUSTICE PITNEY delivered the opinion of the court.

This suit was brought by the Continental Oil Company against the Attorney General and certain other officials of the State of New Mexico to restrain the enforcement against the company, a distributor of and dealer in gasoline and other petroleum products in that State, of the provisions of an act of the Legislature (Laws New Mexico, 1919, c. 93, p. 182) imposing an excise tax of 2 cents for each gallon of gasoline sold or used, and an annual license tax of $50 for each distributing station or place of business. The case was here before under the name of *Askren* v. *Continental Oil Co.*, 252 U. S. 444, on review of an order of the District Court (three judges sitting) granting a temporary injunction. It is now here for review of the final decree; and Mr. Askren's term as Attorney General having expired, Mr. Bowman, his successor in office, has been substituted as a party in his stead.

On the former appeal, it appeared upon the face of the bill that plaintiff (appellee) purchases gasoline in various States other than New Mexico and ships it into that State, there to be sold and delivered; that it carries on business in two ways: first, gasoline is brought in from other States either in tank cars, in barrels, or in packages containing not less than two 5-gallon cans, and sold and delivered to customers in the original packages, in the same form and condition as when received by plaintiff in the State

of New Mexico; as to which we held plaintiff is engaged in interstate commerce and not liable to pay to the State a license tax for purchasing, shipping, and selling gasoline in that manner; secondly, a part of plaintiff's business consists of selling gasoline from the tank cars, barrels, and packages in quantities to suit purchasers; and we held that business of this kind is properly taxable by the laws of the State, although the gasoline is brought into the State in interstate commerce; that the mere fact that it was produced in another State does not show a discrimination against the products of such State, and that sales from broken packages in quantities to suit purchasers are a subject of taxation within the legitimate power of the State. But these latter sales were little emphasized in the bill, which stressed the sales in original packages; and since from its averments it was impossible to determine whether the sales from broken packages were of substantial importance, we did not at that stage of the case go into the question whether the act was separable, but reserved it for the final hearing, while affirming the order for a temporary injunction.

Upon the going down of the mandate, plaintiff amended its bill by averring that, in addition to carrying on the business of buying and selling gasoline and other petroleum products, it is using gasoline at each of its distributing stations within the State of New Mexico (37 in number) in the operation of its automobile tank wagons and otherwise; that under the terms of the act it is prohibited from using this gasoline except upon the payment of the excise tax of 2 cents per gallon therefor; that this is a property tax, void under § 1 of Article VIII of the state constitution because not levied in proportion to the value of the gasoline; and that the imposition of the tax denies to plaintiff the equal protection of the laws and amounts to a taking of its property without due process of law, in contravention of the Fourteenth Amendment, and further is in

violation of the commerce clause of the Constitution of the United States.

Defendants answered, alleging that plaintiff's sales in tank cars or other unbroken packages are insignificant as compared with its sales made after original packages have been broken; denying that the act exacts of the plaintiff payment of a license tax for the privilege of shipping or selling gasoline in interstate commerce, or of an excise tax on the gasoline sold in such commerce; averring that the State of New Mexico and its officers charged with enforcement of the law do not construe the act as affecting interstate commerce, and have no purpose or intention to enforce it so as to do so, or otherwise than so far as intrastate commerce is concerned; and averring that any gasoline used by plaintiff at its distributing stations is no longer in interstate commerce, but has become commingled with the general mass of property in the State, and a tax upon its use is not void under the state constitution or a violation of the commerce clause or the Fourteenth Amendment.

The case came on for final hearing upon stipulated facts as to the course of plaintiff's business, from which it appeared that during the years 1918 and 1919 and the first seven months of 1920 its sales of gasoline in bulk or from broken packages constituted about 94.5 per cent. of its aggregate business, and sales in original barrels, packages, or tank cars without breaking the packages about 5.5 per cent.; in addition to which the company consumed in the conduct of its own business gasoline equal to about 8 per cent. of its total sales. It was further stipulated that this represents the ordinary course of business of the company, but that future percentages will depend upon the demands of customers.

The trial court, after referring to our decision in 252 U. S., proceeded to pass upon the question whether the statute is separable and capable of being sustained so far

as it imposes a tax upon domestic business legitimately taxable. Reciting the language of the act, and reading it as including every distributor of gasoline whether selling at retail or in original packages, as imposing an excise tax upon all gasoline whether sold in one way or the other, and as making no exemption from either the license or the excise tax for persons selling gasoline or for gasoline sold in original packages, the court declared that it could not read an exemption into it without giving it a meaning the legislature might never have intended; and held the act not separable, but void as to both interstate and domestic business. Having reached this conclusion, the court found it unnecessary to pass upon the question whether the imposition of an excise tax of 2 cents per gallon upon the gasoline used by plaintiff in its automobiles and trucks employed in the business of distributing its wares for sale was in violation of the provision of § 1, Art. VIII, of the constitution of the State because not levied in proportion to the value of the gasoline so used.

Assuming that, upon the question of construction, the District Court was right, and that the act manifests an intent to tax interstate as well as domestic transactions in gasoline, and is not in this respect capable of separation, still, so far as the excise tax is concerned—imposed as it is upon the sale and use of gasoline according to the number of gallons sold and used—the divisible nature of the subject renders it feasible to control the operation and effect of the tax so as to prevent it from being imposed upon sales in interstate commerce, while allowing the State to enforce it with respect to domestic transactions; and with the allowance of an injunction limited accordingly plaintiff will receive the full protection to which it is entitled under the Constitution of the United States. The applicable rule is that laid down in *Ratterman* v. *Western Union Telegraph Co.*, 127 U. S. 411, where, in response to a question whether a single tax, assessed by a state upon

the receipts of a telegraph company derived partly from interstate commerce and partly from commerce within the State, but returned and assessed in gross and without separation or apportionment, was wholly invalid or invalid only in proportion and to the extent that the receipts were derived from interstate commerce, this court unanimously answered that so far as levied upon receipts derived from interstate commerce the tax was void, but so far as levied upon receipts from commerce wholly within the State it was valid. This case has been cited repeatedly with approval and its principle accepted. *Western Union Telegraph Co.* v. *Alabama*, 132 U. S. 472, 476–477; *Lehigh Valley R. R. Co.* v. *Pennsylvania*, 145 U. S. 192, 200–201; *Postal Telegraph Cable Co.* v. *Charleston*, 153 U. S. 692, 697; *Western Union Telegraph Co.* v. *Kansas*, 216 U. S. 1, 31.

But with the license tax it is otherwise. If the statute is inseparable, then both by its terms and by its legal operation and effect this tax is imposed generally upon the entire business conducted, including interstate commerce as well as domestic; and the tax is void under the authority of *Leloup* v. *Port of Mobile*, 127 U. S. 640, 647; *Crutcher* v. *Kentucky*, 141 U. S. 47, 58–59; *Williams* v. *Talladega*, 226 U. S. 404, 419; and other cases of that character.

Upon the question of severability, we are constrained to concur in the view adopted by the District Court; and this notwithstanding our hesitation, in advance of a declaration by the court of last resort of the State, to adopt a construction bringing the law into conflict with the Federal Constitution. *Ohio Tax Cases*, 232 U. S. 576, 591; *St. Louis Southwestern Ry. Co.* v. *Arkansas*, 235 U. S. 350, 369–370. The act, in its 2d section, requires every distributor of gasoline to pay an annual license tax of $50 for each distributing station or place of business or agency; requires it to be paid in advance; and renders it unlawful to carry on the business without having paid it.

Section 8 declares that any person who shall engage or continue in the business of selling gasoline without a license shall be deemed guilty of a misdemeanor, and, upon conviction, be punished by fine or imprisonment, or both. The subject taxed is not in its nature divisible, as in the case of the excise tax. The imposition falls upon the entire business indiscriminately; and so does the prohibition against the further conduct of business without making the payment. By accepted canons of construction, the provisions of the act in respect of this tax are not capable of separation so as to confine them to domestic trade, leaving interstate commerce exempt. *United States* v. *Reese*, 92 U. S. 214, 221; *Trade-Mark Cases*, 100 U. S. 82, 99; *Poindexter* v. *Greenhow*, 114 U. S. 270, 304–305; *Pollock* v. *Farmers' Loan & Trust Co.*, 158 U. S. 601, 636.

No doubt the State might impose a license tax upon the distribution and sale of gasoline in domestic commerce if it did not make its payment a condition of carrying on interstate or foreign commerce. But the State has not done this by any act of legislation. Its executive and administrative officials have disavowed a purpose to exact payment of the license tax for the privilege of carrying on interstate commerce. But the difficulty is that, since plaintiff, so far as appears, necessarily conducts its interstate and domestic commerce in gasoline indiscriminately at the same stations and by the same agencies, the license tax cannot be enforced at all without interfering with interstate commerce unless it be enforced otherwise than as prescribed by the statute—that is to say, without authority of law. Hence, it cannot be enforced at all.

With the excise tax as imposed upon the use of gasoline by plaintiff at its distributing stations, in the operation of its automobile tank wagons and otherwise, we have no difficulty. Manifestly, gasoline thus used has passed

beyond interstate commerce, and the tax can be imposed upon its use, as well as upon the sale of the same commodity in domestic trade, without infringing plaintiff's commercial rights under the Federal Constitution. Section 1, Article VIII, of the state constitution, invoked by plaintiff, reads: "Taxes levied upon tangible property shall be in proportion to the value thereof, and taxes shall be equal and uniform upon subjects of taxation of the same class." Clearly, the first part of this refers to property taxation. The tax imposed by the act under consideration upon the "sale or use of all gasoline sold or used in this State" is not property taxation, but in effect, as in name, an excise tax. We see no reason to doubt the power of the State to select this commodity, as distinguished from others, in order to impose an excise tax upon its sale and use; and since the tax operates impartially upon all, and with territorial uniformity throughout the State, we deem it "equal and uniform upon subjects of taxation of the same class," within the meaning of § 1 of Article VIII.

There is no substance in the objection that the excise tax, as applied to domestic sales and domestic use of gasoline, infringes plaintiff's rights under the due process and equal protection clauses of the Fourteenth Amendment. The contention that it interferes with interstate commerce because the gasoline is the product of other States already has been disposed of.

The decree under review should be reversed, and the cause remanded with directions to grant a decree enjoining the enforcement as against plaintiff of the license tax without qualification, and of the excise tax upon the sale or use of gasoline only with respect to sales of gasoline brought from without the State into the State of New Mexico, and there sold and delivered to customers in the original packages, whether tank cars, barrels, or other packages, and in the same form and condition as when

received by plaintiff in that State; but without prejudice to the right of the State, through appellants or other officers, to enforce collection of the excise tax with respect to sales of gasoline from broken packages in quantities to suit purchasers, notwithstanding such gasoline may have been brought into the State in interstate commerce, and with respect to any and all gasoline used by plaintiff at its distributing stations or elsewhere in the State in the operation of its automobile tank wagons or otherwise; and without prejudice to the right of the State, through appellants or other officers, to require plaintiff to render detailed statements of all gasoline received, sold, or used by it, whether in interstate commerce or not, to the end that the State may the more readily enforce said excise tax to the extent that it has lawful power to enforce it as above stated.

Decree reversed, and the cause remanded for further proceedings in conformity with this opinion.

HARRIS, BY HIS NEXT FRIEND, ETC. *v.* DISTRICT OF COLUMBIA.

ON CERTIFICATE FROM THE COURT OF APPEALS OF THE DISTRICT OF COLUMBIA.

No. 16. Argued January 24, 1919.—Decided June 6, 1921.

1. The work of cleaning the streets for the protection of the public health and comfort appertains to the discretionary governmental functions of the District of Columbia, distinguished from the special corporate or municipal duty of keeping the streets in repair. P. 652.
2. The District is not liable for personal injuries occasioned by the negligence of its employee while engaged in sprinkling streets preparatory to cleaning them. P. 652.

THE case is stated in the opinion.

Mr. Rossa F. Downing, for Harris, discussed the following cases:

Weightman v. *Corporation of Washington*, 1 Black, 39; *Barnes* v. *District of Columbia*, 91 U. S. 540; *District of Columbia* v. *Woodbury*, 136 U. S. 450; *Quill* v. *New York*, 36 App. Div. 476; *Missano* v. *The Mayor*, 160 N. Y. 126; *Barney Dumping-Boat Co.* v. *The Mayor*, 40 Fed. Rep. 50; *Young* v. *Metropolitan Street Ry. Co.*, 126 Mo. App. 2; *Denver* v. *Porter*, 126 Fed. Rep. 288; *Pass Christian* v. *Fernandez*, 100 Mississippi, 76; *Ostrom* v. *San Antonio*, 94 Texas, 525; *Denver* v. *Davis*, 37 Colorado, 370; *Coates* v. *District of Columbia*, 42 App. D. C. 194; *Bruhnke* v. *La-Crosse*, 155 Wisconsin, 485; *Conelly* v. *Nashville*, 100 Tennessee, 262; *Love* v. *Atlanta*, 95 Georgia, 129; *Condict* v. *Jersey City*, 46 N. J. L. 157; *Savage* v. *Salem*, 23 Oregon, 381; *Kuehn* v. *Milwaukee*, 92 Wisconsin, 263; *Bryant* v. *St. Paul*, 33 Minnesota, 291; *Haley* v. *Boston*, 191 Massachusetts, 291; *Hill* v. *Boston*, 122 Massachusetts, 376; *Workman* v. *New York City*, 179 U. S. 552.

Mr. Robert L. Williams and *Mr. Francis H. Stephens*, with whom *Mr. Conrad H. Syme* was on the brief, for the District of Columbia.

MR. JUSTICE MCREYNOLDS delivered the opinion of the court.

The Court of Appeals, District of Columbia, has certified the following question (Jud. Code, § 251):

"Is the sprinkling of the streets to keep down dust for the purpose of the comfort and health of the general public, a public or governmental act as contradistinguished from a private or municipal act, which exempts the District of Columbia from liability for the injuries caused by one of its employees engaged therein?"

In order to prepare the streets of Washington for sweeping, it was the practice to sprinkle them from portable tanks. While filling one of these tanks through a hose connected to a water plug, a corporate employee negligently dropped the plug cover and injured Adelbert Harris, a young child. He brought suit against the District of Columbia for damages.

It is established doctrine that when acting in good faith municipal corporations are not liable for the manner in which they exercise discretionary powers of a public or legislative character. A different rule generally prevails as to their private or corporate powers. Dillon on Municipal Corporations, 5th ed., § 1626, *et seq.*, and cases cited.

Application of these general principles to the facts of particular cases has occasioned much difficulty. The circumstances being stated, it is not always easy to determine what power a municipal corporation is exercising. But, nothing else appearing, we are of opinion that, when sweeping the streets, a municipality is exercising its discretionary powers to protect public health and comfort and is not performing a special corporate or municipal duty to keep them in repair. This conclusion, we think, accords with common observation, harmonizes with what has been declared heretofore concerning liability of the District of Columbia for torts, and is supported by well considered cases. *Weightman* v. *Corporation of Washington* (1861), 1 Black, 39; *Barnes* v. *District of Columbia* (1875), 91 U. S. 540, 551; *District of Columbia* v. *Woodbury* (1890), 136 U. S. 450; *Love* v. *Atlanta*, 95 Georgia, 129; *Conelly* v. *Nashville*, 100 Tennessee, 262; *Haley* v. *Boston*, 191 Massachusetts, 291; *Brühnke* v. *La Crosse*, 155 Wisconsin, 485.

In *Weightman* v. *Corporation of Washington*, *supra*, the corporation was held liable for injuries resulting from an insecure bridge placed by the charter under its exclusive control and management. Among other things, through

Mr. Justice Clifford, this was said: "Municipal corporations undoubtedly are invested with certain powers, which, from their nature, are discretionary, such as the power to adopt regulations or by-laws for the management of their own affairs, or for the preservation of the public health, or to pass ordinances prescribing and regulating the duties of policemen and firemen, and for many other useful and important objects within the scope of their charters. Such powers are generally regarded as discretionary, because, in their nature, they are legislative; and although it is the duty of such corporations to carry out the powers so granted and make them beneficial, still it has never been held that an action on the case would lie against the corporation, at the suit of an individual, for the failure on their part to perform such a duty. . . . Whether the action in this case is maintainable against the defendants or not, depends upon the terms and conditions of their charter, as is obvious from the views already advanced."

Barnes v. *District of Columbia, supra,* presented a case of injury arising from a defective street. The District was held liable, and, for the court, Mr. Justice Hunt said, concerning the point presently important:

"Some cases hold that the adoption of a plan of such a work is a judicial act; and, if injury arises from the mere execution of that plan, no liability exists. *Child* v. *City of Boston,* 4 Allen, 41; *Thayer* v. *Boston,* 19 Pick. 511. Other cases hold that for its negligent execution of a plan good in itself, or for mere negligence in the care of its streets or other works, a municipal corporation cannot be charged. *City of Detroit* v. *Blackeby,* 21 Michigan, 84, is of the latter class, where it was held that the city was not liable for an injury arising from its neglect to keep its sidewalks in repair.

"The authorities establishing the contrary doctrine that a city is responsible for its mere negligence, are so

numerous and so well considered, that the law must be deemed to be settled in accordance with them." (Citing many cases.)

District of Columbia v. *Woodbury, supra.* Woodbury claimed damages for injuries resulting from a sidewalk, negligently permitted to remain out of repair. Held, that the principle of *Barnes* v. *District of Columbia* applies, notwithstanding the form of the District government had been changed.

In *Roth* v. *District of Columbia*, 16 App. D. C. 323; *Brown* v. *District of Columbia*, 29 App. D. C. 273; *District of Columbia* v. *Tyrrell*, 41 App. D. C. 463; and *Coates* v. *District of Columbia*, 42 App. D. C. 194, freedom of the District of Columbia from liability on account of matters within its governmental powers is recognized.

Workman v. *New York City*, 179 U. S. 552, is not applicable. The proceeding being in admiralty, rights and liabilities of the parties depended upon the maritime code and not upon local laws of New York. Here, common-law principles apply. See *Southern Pacific Co.* v. *Jensen*, 244 U. S. 205.

The certified question must be answered in the affirmative.

MR. JUSTICE HOLMES, MR. JUSTICE BRANDEIS and MR. JUSTICE CLARKE dissent.

SEABOARD AIR LINE RAILWAY v. UNITED STATES.

APPEAL FROM THE COURT OF CLAIMS.

No. 62. Argued March 16, 1920; restored to docket for reargument November 15, 1920; reargued April 12, 1921.—Decided June 6, 1921.

Section 3477 of the Revised Statutes, forbidding all transfers and assignments of any claim upon the United States before its allowance, etc., was intended to prevent frauds upon the Treasury, and does not apply to a transfer resulting from the consolidation of two railroad corporations whereby, pursuant to their agreement and the laws of their respective States, the rights, franchises, property, and choses in action of each are transferred to and become vested in the consolidated corporation. P. 656.

53 Ct. Clms. 107, reversed.

THE case is stated in the opinion.

Mr. Benjamin Carter, with whom *Mr. Frank Carter Pope* was on the brief, for appellant.

Mr. Assistant Attorney General Davis, with whom *Mr. Crowley Wentworth*, Special Assistant to the Attorney General, was on the brief, for the United States.

MR. JUSTICE MCREYNOLDS delivered the opinion of the court.

Appellant sued in the Court of Claims to recover balances for transportation services originally payable to the Florida Central & Peninsular Railroad Company, to whose rights it had succeeded through merger or consolidation. Holding that because of § 3477, Rev. Stats. (9 Stat. 41, and 10 Stat. 170), appellant could not maintain the action, that court dismissed its petition.

Section 3477—"All transfers and assignments made of any claim upon the United States, or of any part or share thereof, or interest therein, whether absolute or conditional, and whatever may be the consideration therefor, and all powers of attorney, orders, or other authorities for receiving payment of any such claim, or of any part or share thereof, shall be absolutely null and void, unless they are freely made and executed in the presence of at least two attesting witnesses, after the allowance of such a claim, the ascertainment of the amount due, and the issuing of a warrant for the payment thereof."

The Seaboard Air Line Railway was originally chartered under the laws of Virginia; by authorized union with others, it became a consolidated corporation under the laws of Virginia, North Carolina, South Carolina, Georgia, and Alabama; and in 1903 under "Articles of agreement of merger and consolidation" and the statutes of Georgia and Florida (§ 2173, Code of Ga. 1895; § 2812, Gen. Stat. of Fla.), the Florida Central & Peninsular Railroad, a Florida corporation, was united with it. As agreed and provided by the laws of the two States, the rights, privileges, franchises, and all property, real, personal, and mixed, and all debts on every account, as well as stock subscriptions and other things in action belonging to each of the constituents, were transferred to and vested in the consolidated corporation without further act or deed, "as effectually as they were in the former companies."

Section 3477 has been before this court many times for construction and application. *United States* v. *Gillis*, 95 U. S. 407; *Erwin* v. *United States*, 97 U. S. 392; *Spofford* v. *Kirk*, 97 U. S. 484; *Goodman* v. *Niblack*, 102 U. S. 556; *St. Paul & Duluth R. R. Co.* v. *United States*, 112 U. S. 733; *Bailey* v. *United States*, 109 U. S. 432; *Butler* v. *Goreley*, 146 U. S. 303; *Hager* v. *Swayne*, 149 U. S. 242; *Ball* v. *Halsell*, 161 U. S. 72; *Price* v. *Forrest*, 173 U. S. 410.

In *Erwin* v. *United States*, *Goodman* v. *Niblack*, and *Price* v. *Forrest*, certain exceptions to the general language of the section were recognized because not within the evil at which the statute aimed. It was intended to prevent frauds upon the Treasury, and the mischiefs designed to be remedied "are mainly two: First, the danger that the rights of the government might be embarrassed by having to deal with several persons instead of one, and by the introduction of a party who was a stranger to the original transaction. Second, That, by a transfer of such a claim against the government to one or more persons not originally interested in it, the way might be conveniently opened to such improper influences in prosecuting the claim before the departments, the courts, or the Congress, as desperate cases, when the reward is contingent on success, so often suggest."

We cannot believe that Congress intended to discourage, hinder or obstruct the orderly merger or consolidation of corporations as the various States might authorize for the public interest. There is no probability that the United States could suffer injury in respect of outstanding claims from such union of interests and certainly the result would not be more deleterious than would follow their passing to heirs, devisees, assignees in bankruptcy, or receivers, all of which changes of ownership have been declared without the ambit of the statute. The same principle which required the exceptions heretofore approved applies here.

The judgment of the court below is reversed and the cause remanded with direction to afford reasonable opportunity to both sides for taking any additional proof rendered necessary by the withdrawal by the United States of a stipulation upon which reliance had been placed; and for further proceedings in conformity with this opinion.

Reversed.

KANSAS CITY SOUTHERN RAILWAY COMPANY ET AL. *v.* ROAD IMPROVEMENT DISTRICT NUMBER 6 OF LITTLE RIVER COUNTY, ARKANSAS.

ERROR TO THE SUPREME COURT OF THE STATE OF ARKANSAS.

No. 205. Argued March 16, 17, 1921.—Decided June 6, 1921.

1. A judgment of a state supreme court sustaining a state tax law over the objection that, as applied in the case, it violates the Constitution, is reviewable by writ of error. P. 659.
2. Railroad property may not be burdened for local improvements upon a basis so wholly different from that used for ascertaining the contribution demanded of individual owners as necessarily to produce manifest inequality. P. 661.
3. An Arkansas statute authorizing local assessments for a road improvement, *held* a denial of the equal protection of the laws, as applied in this case. P. 661.

139 Arkansas, 424, reversed. Certiorari denied.

ERROR to a judgment of the Supreme Court of Arkansas which affirmed a judgment of a circuit court approving a road improvement assessment on property of the plaintiffs in error. The facts are stated in the opinion.

Mr. Samuel W. Moore and *Mr. James B. McDonough*, with whom *Mr. Frank H. Moore* and *Mr. A. F. Smith* were on the briefs, for plaintiffs in error.

Mr. John P. DuLaney, with whom *Mr. A. D. DuLaney* was on the brief, for defendant in error.

MR. JUSTICE MCREYNOLDS delivered the opinion of the court.

Proceeding under Act No. 338, 1915 Session, Arkansas Legislature, the County Court created and fixed the

boundaries of "Road Improvement District No. 6 of Little River County." They include approximately 25,000 acres and within them there are 9.7 miles of main track railroad owned and operated by plaintiffs in error, Kansas City Southern Railway Company and Texarkana & Fort Smith Railway Company, together with the corresponding right of way, covering 130 acres, and requisite station buildings.

Little River County is distinctly argicultural, has an area of 546 square miles, and 16,000 inhabitants. The Improvement District was created for the purpose of constructing 11.2 miles of gravel road through taxation upon real property, defined by the statute as "land, improvements thereon, railroads, railroad rights-of-way and improvements thereon, including public buildings, sidetracks, etc., and tramroads."

A duly appointed Board assessed the benefits to plaintiffs in error's property on account of the proposed road at $7,000.00 per mile of main track—$67,900.00. They divided the farming lands into five zones, determined by distance from the highway, and assessed uniform benefits upon all within the same zone without regard to improvements or market value—in the first $12.00 per acre, second $10.00, third $8.00, fourth $6.00, and fifth $4.00. Town lots were likewise assessed without reference to value or improvements at $10.00, $15.00, $20.00 and $25.00 each, according to location. A pipe line, telephone line, and telegraph line were severally assessed at $2,500.00, $300.00 and $300.00 per mile, without any designated basis.

Plaintiffs in error duly maintained that the assessment upon their property was unequal, arbitrary, unreasonable, and in violation of the due process and equal protection clauses of the Fourteenth Amendment. The state courts held to the contrary and in effect declared the statute providing for the Road Improvement District authorized the action taken by the Board, and that so construed it was a

valid enactment. 139 Arkansas, 424. The validity of the statute having been adequately challenged, the cause is properly here upon writ of error, and the petition for certiorari will be denied.

The settled general rule is that a state legislature "may create taxing districts to meet the expense of local improvements and may fix the basis of taxation without encountering the Fourteenth Amendment unless its action is palpably arbitrary or a plain abuse." *Gast Realty Co.* v. *Schneider Granite Co.*, 240 U. S. 55; *Houck* v. *Little River Drainage District*, 239 U. S. 254, 262. Ordinarily, the levy may be upon lands specially benefited according to value, position, area, or the front-foot rule. *French* v. *Barber Asphalt Co.*, 181 U. S. 324, 342; *Cass Farm Co.* v. *Detroit*, 181 U. S. 396, 397; *Louisville & Nashville R. R. Co.* v. *Barber Asphalt Co.*, 197 U. S. 430; *Withnell* v. *Ruecking Construction Co.*, 249 U. S. 63; *Hancock* v. *City of Muskogee*, 250 U. S. 454; *Branson* v. *Bush*, 251 U. S. 182.

If, however, the statute providing for the tax is "of such a character that there is no reasonable presumption that substantial justice generally will be done, but the probability is that the parties will be taxed disproportionately to each other and to the benefit conferred the law cannot stand against the complaint of one so taxed in fact." *Gast Realty Co.* v. *Schneider Granite Co.*, *supra*.

The statute under consideration prescribes no definite standard for determining benefits from proposed improvements. The assessors made estimates as to farm lands and town lots according to area and position and wholly without regard to their value, improvements thereon, or their present or prospective use. On the other hand, disregarding both area and position, they undertook to estimate benefits to the property of plaintiffs in error without disclosing any basis therefor, but apparently according to some vague speculation as to present worth and possible future increased receipts from freight and passengers

which would enhance its value, considered as a component part of the system.

Obviously, the railroad companies have not been treated like individual owners, and we think the discrimination so palpable and arbitrary as to amount to a denial of the equal protection of the law. Benefits from local improvements must be estimated upon contiguous property according to some standard which will probably produce approximately correct general results. To say that 9.7 miles of railroad in a purely farming section, treated as an aliquot part of the whole system, will receive benefits amounting to $67,900.00 from the construction of 11.2 miles of gravel road seems wholly improbable, if not impossible. Classification, of course, is permissible, but we can find no adequate reason for what has been attempted in the present case. *Royster Guano Co.* v. *Virginia*, 253 U. S. 412, 415. It is doubtful whether any very substantial appreciation in value of the railroad property within the district will result from the improvements; and very clearly it cannot be taxed upon some fanciful view of future earnings and distributed values, while all other property is assessed solely according to area and position. Railroad property may not be burdened for local improvements upon a basis so wholly different from that used for ascertaining the contribution demanded of individual owners as necessarily to produce manifest inequality. Equal protection of the law must be extended to all.

The judgment of the court below is reversed and the cause remanded for further proceedings not inconsistent with this opinion.

Reversed.

WESTERN UNION TELEGRAPH COMPANY v. POSTON.

CERTIORARI TO THE SUPREME COURT OF THE STATE OF SOUTH CAROLINA.

No. 293. Argued October 20, 1920.—Decided June 6, 1921.

1. A telegraph company is not subject to a common-law liability for negligent delay in the delivery of a message while its system was in the exclusive possession and control of the Government and being operated by the Postmaster General, pursuant to the Joint Resolution of July 16, 1918, c. 154, 40 Stat. 904, and the Proclamation of July 22, 1918, 40 Stat. 1807. P. 664. *Missouri Pacific R. R. Co.* v. *Ault, ante*, 554.
2. The provision of the proclamation for continuing operation of the telegraph systems through their officers and employees in the names of their respective companies, subject to the orders of the Postmaster General, did not make the companies the operating agents of the United States, and so render them liable for such negligence, nor did the Postmaster General's Order, of like effect, dated August 1, 1918. P. 665.
3. The contract of October 9, 1918, between the Postmaster General and the petitioner did not make the company liable for negligence under government operation, but merely provided indemnity. P. 666.
4. Omission of Congress to provide a remedy against the Government in such cases would afford no ground for holding the telegraph company liable. P. 667.

107 S. E. Rep. 516, reversed.

THE case is stated in the opinion.

Mr. Rush Taggart and *Mr. Francis R. Stark*, with whom *Mr. P. A. Willcox*, *Mr. F. L. Willcox* and *Mr. Henry E. Davis* were on the brief, for petitioner.

Mr. Philip H. Arrowsmith, with whom *Mr. Alva M. Lumpkin* was on the brief, for respondent.

The Solicitor General filed a brief on behalf of the United States.

Mr. Wm. M. Silverman and *Mr. Joseph P. Tolins*, by leave of court, filed a brief as *amici curiæ*.

MR. JUSTICE BRANDEIS delivered the opinion of the court.

The Supreme Court of South Carolina (107 S. E. Rep. 516) affirmed a judgment of the trial court against the Western Union Telegraph Company for damages resulting from negligent delay in delivering an intrastate message sent October 2, 1918. Its telegraph system was at that time in the exclusive possession and control of the Government and was being operated by the Postmaster General pursuant to the joint resolution of Congress of July 16, 1918, c. 154, 40 Stat. 904, and the proclamation of the President of July 22, 1918, 40 Stat. 1807. The state court declared that, while the action and the judgment recovered therein were in form against the Western Union Telegraph Company, yet, in effect, they were against the Postmaster General; that in suing the company the plaintiff had pursued the course directed by the President's proclamation and confirmed by the contract dated October 9, 1918, between the Postmaster General and company concerning compensation; and that since under this contract the Postmaster General would have to pay any judgment rendered against the company, the entry of judgment would not deprive it of property without due process of law. This court granted a writ of certiorari; 253 U. S. 480. Whether the company can be held liable is the only question presented here.

Our decision must depend primarily upon the authority conferred by Congress in the joint resolution which provided:

"That the President during the continuance of the present war is authorized and empowered, whenever he shall deem it necessary for the national security or defense, to supervise or to take possession and assume control of any telegraph, telephone, marine cable, or radio system or systems, or any part thereof, and to operate the same in such manner as may be needful or desirable for the duration of the war . . . *Provided*, That just compensation shall be made for such supervision, possession, control, or operation, to be determined by the President."

Under this resolution the President might, doubtless, have limited his function to mere supervision of the telegraph and telephone systems leaving them in the possession and under the control of the companies. But the resolution also empowered him "to take possession and assume control" of the systems; and this he did, (*Dakota Central Telephone Co.* v. *South Dakota*, 250 U. S. 163, 183, 185) the proclamation declaring:

"I . . . do hereby take possession and assume control and supervision of each and every telegraph and telephone system, and every part thereof, within the jurisdiction of the United States, including all equipment thereof and appurtenances thereto whatsoever and all materials and supplies. . . .

"From and after twelve o'clock midnight on the 31st day of July, 1918, all telegraph and telephone systems included in this order and proclamation shall conclusively be deemed within the possession and control and under the supervision of said Postmaster General without further act or notice."

In conferring upon the President power "to take possession and assume control" of the telegraph systems the resolution adopted language identical with that which had been employed in the Act of August 29, 1916, c. 418, 39 Stat. 619, 645, pursuant to which the railroads were brought under federal control. See *Missouri Pacific R. R.*

Co. v. *Ault, ante,* 554. We held there that the supplementary legislation known as the Federal Control Act did not impose liability upon the company, and that, since the Government was operating the property, the railroad company could not be held liable under the established principles of the common law governing liability. These principles are equally applicable here.

In respect to telegraph systems there was no supplementary legislation similar to the Federal Control Act; so that the argument mainly relied upon by plaintiff in the *Missouri Pacific Case* is not made here. But it is contended that the proclamation, the order of the Postmaster General of August 1, 1918, and the contract between him and the company concerning compensation authorized suit against the company as the operating agent of the Government in the same way that the Federal Control Act authorized suit against the Director General. We find in them no basis for such liability.[1] Obviously neither proclamation, order, nor contract could create a liability not authorized by the resolution of Congress on which they rest. Nor did they attempt to do so.

(a) The provision in the proclamation relied upon to establish the liability is this:

"Until and except so far as said Postmaster General shall from time to time by general or special orders otherwise provide, the owners, managers, boards of directors, receivers, officers, and employees of the various telegraph

[1] This view has been taken also by state courts. *Canidate* v. *Western Union Telegraph Co.*, 203 Ala. 675; *Western Union Telegraph Co.* v. *Glover*, 17 Ala. App. 374; *Western Union Telegraph Co.* v. *Davis*, 142 Ark. 304; *Mitchell* v. *Cumberland Telephone Co.*, 188 Ky. 263; *Foster* v. *Western Union Telegraph Co.*, 205 Mo. App. 1; *Western Union Telegraph Co.* v. *Conditt*, 223 S. W. Rep. 234 (Tex. Civ. App.); *Western Union Telegraph Co.* v. *Robinson*, 225 S. W. Rep. 877 (Texas Civ. App.). See contra, *Witherspoon & Sons* v. *Postal Telegraph & Cable Co.*, 257 Fed. Rep. 758; *Spring* v. *American Telegraph & Telephone Co.*, 86 W. Va. 192.

and telephone systems shall continue the operation thereof in the usual and ordinary course of the business of said systems, in the names of their respective companies, associations, organizations, owners, or managers, as the case may be."

This provision is in no way inconsistent with holding that the President took possession of and operated the telegraph systems as distinguished from taking over the companies and operating them. The companies were not made the operating agents of the United States. The officers of the companies were to operate the properties for the United States and it was to be done "in the names of their respective companies."

(b) The Postmaster General's Order No. 1783, dated August 1, 1918, was of like effect. It merely directed that:

"Until further notice the telegraph and telephone companies shall continue operation in the ordinary course of business through regular channels. . . . All officers, operators and employees . . . will continue in the performance of their present duties, reporting to the same officers as heretofore and on the same terms of employment."

(c) The contract of October 9, 1918, between the Postmaster General and the Western Union, did not purport to make the company liable. It merely provided indemnity. The provision relied upon is this:

"The Postmaster General shall pay, or save the owner harmless from, all expenses incident to or growing out of the possession, operation and use of the property taken over during the period of Federal control. He shall also pay or save the owner harmless from all judgments or decrees that may be recovered or issued against, and all fines and penalties that may be imposed upon it by reason of any cause of action arising out of Federal control or anything done or omitted in the possession, operation, use or control of its property during the period of Federal

control, except judgments or decrees founded on obligations of the owner to the Postmaster General or the United States."

This provision is substantially the same as that inserted in the compensation agreement entered into between the Director General of Railroads and the railroad companies.[1]

It is urged that telegraph companies should be held liable because otherwise those using the system would be without remedy for losses suffered thereby. Whether this is true or whether under the Tucker Act the sender of a message would have a remedy in the Court of Claims or in a Federal District Court we have no occasion to consider in this case.[2] If Congress has omitted to provide adequately for the protection of rights of the public, Congress alone can provide the remedy.

Reversed.

---

[1] See Form A, October 22, 1918, for "Agreement between the Director General of Railroads and the . . . Company," Bulletin No. 4 (Revised) pp. 39, 47, § 4, Par. *i*.

[2] In *Heil* v. *United States*, 273 Fed. Rep. 729, a petition under the Tucker Act for damages arising from failure to transmit a prepaid cable message over the Commercial Cable Company's lines was held by Learned Hand, D. J., on demurrer to state a good cause of action. See also discussion in Senate, June 10, 1919, vol. 58, Cong. Rec., p. 920.

WEBER ELECTRIC COMPANY *v.* E. H. FREEMAN ELECTRIC COMPANY.

CERTIORARI TO THE CIRCUIT COURT OF APPEALS FOR THE THIRD CIRCUIT.

No. 273. Argued April 21, 1921.—Decided June 6, 1921.

1. A patented device for fastening together the metal cap and sleeve of an incandescent electric lamp socket, consisting of corresponding recesses and protrusions in the inner surface of the cap and the outer surface of the sleeve, respectively, formed by slitting the metal transversely and stamping it, which lock, against longitudinal movement only, by an automatic snap action when the sleeve is thrust longitudinally into the cap (Patent No. 743,206, claims 1 and 4, November 3, 1903), is not infringed by a construction providing the cap with inwardly extended, riveted studs and the sleeve with bayonet slots which lock with the studs by a longitudinal followed by a rotative movement, and an additional stud in the cap which snaps into a hole in the sleeve, as the rotation is completed, preventing reverse rotative movement. P. 675.
2. The patent in suit having made no provision for a lock against rotative movement between the cap and sleeve, cannot be aided by resort to a later patent to the same patentee, providing a slot and projection to overcome the deficiency. P. 675.
3. In view of the prior art, the patentee's concessions made in the patent office, and his later patent, *held* that the words "telescopically received" and "telescopically applied," as used in the patent in suit, must be restricted to a direct longitudinal movement or thrust of the sleeve into the cap. P. 676.
4. One who has specifically narrowed his claim in the Patent Office in order to secure his patent, may not afterwards, by construction or resort to the doctrine of equivalents, give to it the larger scope it might have had if not so amended. P. 677.

262 Fed. Rep. 768, affirmed.

THE case is stated in the opinion.

Mr. Charles Neave, with whom *Mr. Frank C. Curtis* was on the brief, for petitioner.

Mr. Livingston Gifford, with whom *Mr. David P. Wolhaupter* was on the brief, for respondent.

MR. JUSTICE CLARKE delivered the opinion of the court.

This is a suit for infringement of Letters Patent of the United States, No. 743,206, granted to August Weber, Sr., on November 3, 1903. The District Court held claims 1 and 4 valid and infringed, but the Circuit Court of Appeals, while affirming the validity of the claims, reversed the holding that they were infringed. A supposed conflict of this decision as to infringement with one by the Circuit Court of Appeals of the Second Circuit, with respect to the same patent, serves to bring the case here for review on writ of certiorari.

The patent is a simple and, as we shall see, a narrow one. As described in the specification it relates to new and useful improvements in Incandescent-Electric-Lamp-Sockets, the principal object of which is to provide a simple and effective automatic lock or connection between the sleeve and the cap of such a socket.

Nothing new electrically or in the general form of the cap or sleeve is claimed,—the invention relates solely to the method of fastening the overlapping cap to the sleeve, or, as it is sometimes called, the shell or casing.

The validity of the claims involved is conceded in argument, and, having regard to the disclaimer with respect to claims 2 and 3, which has been filed by the petitioner since the decision by the Circuit Court of Appeals, we regard the issue as now narrowed to the infringement of the fourth claim.

The familiar incandescent lamp consists of a glass bulb, attached to a screw threaded base, adapted to be screwed into a properly insulated block, through which the necessary electrical connections are made, and which is en-

closed by a cylindrical "sleeve" of sheet metal. In order to complete the lamp this detached sleeve supporting the bulb and inclosing the insulated block must be fitted and securely fastened into the usual cap, which is attached to the wall or fixture, for if the fastening should become loose, the light might fail, or the bulb fall, or a fire hazard be created. To invent a device by which the sleeve and cap could be easily and securely attached to each other and yet be readily detached when desired, was the problem to which the patentee addressed himself, and his solution of it is thus described in the fourth claim of the patent:

"In a device of the class described, and in combination a pair of members comprising a sheet-metal sleeve having a slotted end, and a sheet-metal cap adapted to telescopically receive the slotted end of said sleeve, one of said members being provided with a recess, and the other having a correspondingly-located *transverse slit and the wall on one side thereof displaced to form a* projection beveled or inclined toward said recessed member and terminating abruptly *at said slit*, whereby said members are adapted to automatically interlock with a snap action when telescopically applied to each other, and to be released by *manual* compression of said slotted sleeve, substantially as described."

To make the device thus described, it was only necessary to cut two transverse slits, each about one-quarter of an inch in length in opposite sides of the flange of an ordinary cap, and to then, with a punch or die, force outward the upper edges or walls of the slits to the extent desired to create the necessary "recesses" which must "terminate" at the lower, sharp edges of the slits. A similar operation on a slotted sleeve would produce a similar result, but when viewed from the outer surface of the sleeve the recesses would become the projections of the quoted fourth claim. When such sleeve is teles-

copically applied to—pushed or pressed into—the cap, it is obvious that with the recesses in the cap and the projections in the sleeve properly positioned and of a suitable size, when the projections shall register with the recesses, the resiliency of the metal will cause the two to engage with a snap action and the sharp lower edges of the slots in the cap will then prevent the cap and sleeve from being separated by a longitudinal movement only, until the sleeve shall be manually compressed to release the projections from the recesses.

It is to be noted, for it will be of significance in the interpretation of the claim involved, that it is required that the projections on the sleeve shall be "beveled or inclined toward said recessed member," and in the specification it is provided that the projections shall be "beveled or inclined from the inner end of the sleeve toward their outer ends." With such construction it would seem plain, even without the exhibits, which show it to be true, that, friction aside, projections so beveled or inclined could readily be released by rotative movement from similarly shaped recesses without compression of the sleeve.

It was admitted at the bar that sockets made as specified in the patent in suit were never put upon the market, but the record shows that with a feature added which is covered by another patent owned by petitioner, the socket met with large commercial success. This other patent is No. 916,812 and was granted March 30, 1909, to the patentee of the patent in suit and two others, on an application filed July 18, 1904. Figures 8 and 9 from the drawings of this patent, showing the cap and sleeve of the petitioner's socket as manufactured by it will aid in describing the additional "improvement" which it made to the device of the patent in suit and will also be of service in comparing this device with what is claimed to be the infringing socket of the respondent.

This patent is also for improvements in incandescent electric lamp sockets and contains fourteen claims, of which only the terms of the first need be noticed. It claims as new and useful "a pair of tubular, sheet-metal members, one adapted to telescopically receive the other, having mutually abutting cut-metal edges on the respective members [the slot 19 in the cap and projection 20 in the sleeve], to *prevent relative rotative movement*, and

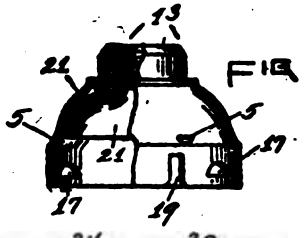

FIG 8

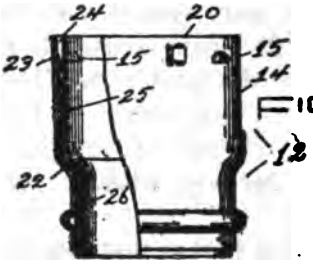

FIG 9

automatically interlocking means *for preventing a telescopic movement of separation* of one member from the other [the recesses 17 in the cap and the projections 15 in the sleeve], said means permitting, without manipulation thereof, the telescopic application of the members to each other." This language, with slight additions and omissions, not significant, is repeated in claims 3, 13, and 14.

This device for preventing "relative rotative movement" of the cap on the sleeve is the feature which the petitioner added to the socket of the patent in suit before putting it upon the market and it consists, as the figure *supra* shows, in the open slot (19) cut to the edge of the

flange of the cap, into which passes the projection on the sleeve (20) when the two are "telescopically applied" to each other. This projection (20) is formed by cutting two longitudinal slits in the sleeve and then pressing outward the narrow strip of metal between them. It is perfectly true, as stated in four of the claims and as asserted with much emphasis in the specification, that this added device effectively prevents any relative rotative movement of the cap and sleeve upon each other.

Coming now to the construction of the respondent,

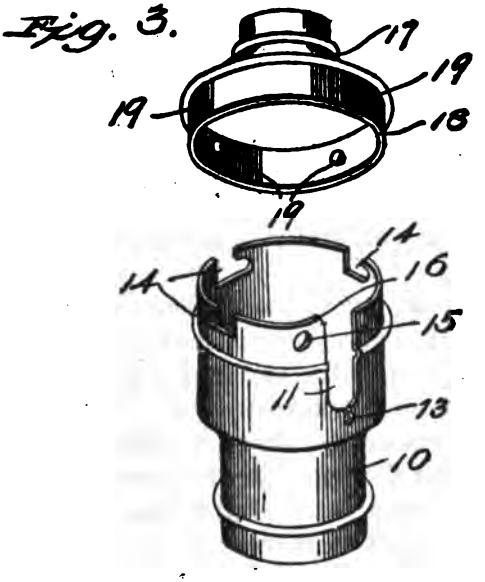

which it is claimed infringes the fourth claim of the patent in suit.

This (respondent's) socket has been manufactured since 1909, under patent No. 927,344, and it may most readily be described by reference to the above figure 3 of the drawing, which was a part of the specification of the patent.

It will be seen from this drawing that instead of outwardly extending recesses in the flange of the cap, formed

by slits and displacing of the metal, such as are in the petitioner's socket, respondent's cap has four inwardly projecting lugs (19), each of which is a separate piece of metal riveted to the flange. Each of these lugs is circular in outline, with a flat inner end or face and presents abrupt shoulders on opposite sides. In the upper edge of the sleeve are three bayonet slots of the familiar form (14), so positioned that the studs on the cap may enter them when the sleeve is slipped into the cap. But when the sleeve has been telescoped, or pushed, into the cap so that the lugs have been pressed to the end or bottom of the longitudinal part of the bayonet slots (14) rotation of the sleeve is obviously necessary to bring them into the transverse parts of the slots, so that the two members will be locked against longitudinal separation. (No such rotative movement of the two members is mentioned in the patent in suit, it is expressly provided against in petitioner's second patent, and it is not possible in its commercial socket.)

This rotative movement accomplishes a second result. Reference to the figure, *supra*, shows a longitudinal slot in the sleeve, which in the key socket affords a passage for the key, but in the keyless socket is narrower, and serves only to render the sleeve compressible. To the left of this slot in the sleeve is cut a round hole (15) so positioned that when three of the lugs in the cap are brought by the rotative movement to the ends of the transverse parts of the bayonet slots the fourth stud will snap into the hole (15). This hole (15) is placed in such a relative position that when the three lugs enter the longitudinal parts of the bayonet slots, the fourth stud rides upon the metal near the edge of the slot in the sleeve, and to facilitate this movement the corner of the slot (16) is bent slightly inward. Thus the adjustment of the studs in the cap is practically a universal adjustment between the cap and shell, so that if any one lug is in

position to enter any bayonet slot two others will be in position to enter the other bayonet slots and the fourth will be in a position to enter the hole (15) when the sleeve and cap have been so pressed together that the (three) other studs have reached the ends of the longitudinal part of the bayonet slots and the rotation described of the one upon the other has been completed. A slight compression of the sleeve suffices to release the members when desired.

This description shows that the structural features of the two sockets are strikingly different. Instead of slits and outwardly extending recesses in the cap of the one there are inwardly extended studs riveted to the cap of the other. And instead of slits and outward projections of the sleeve to lock by snap action with recesses in the cap against longitudinal movement in the one, there are the bayonet slots in the sleeve to lock with studs in the cap of the other to accomplish the same result without snap action. But these different constructions not only differ radically in structural features but they do not function in the same manner, for locking against longitudinal movement in the one is by snap action upon direct longitudinal thrust of the sleeve into the cap, while the other requires first a longitudinal movement or thrust, and then a rotative movement, without which it is entirely ineffective, whereby it locks against longitudinal movement without snap action.

But it is argued that the infringement lies especially in the locking hole (15) in respondent's socket and the associated lug which operate by snap action and afford a positive lock against rotation of the two members on each other.

The sufficient answer to this is that the patent in suit makes no suggestion of a lock against the rotative movement of the cap and sleeve on each other and contains no disclosure providing for it, but, on the contrary, because

the beveled sides which are required by claim 4 for the projections on the sleeve permitted such movement, a subsequently patented addition was added to prevent it. The petitioner can not read into the patent in suit the additional slot in the cap and the additional projection on the sleeve of patentee's second patent, and without them there is no lock against rotative movement in the socket of the first patent to be infringed by the stud snapping into the locking hole of the sleeve of respondent's socket.

This is sufficient to dispose of the case, but we also fully agree with the Circuit Court of Appeals that the prior art, the file wrapper and the second patent to the same patentee, No. 916,812, *supra*, require that the expressions in the fourth claim "telescopically received" and "telescopically applied" must be restricted to a direct longitudinal movement or thrust of the sleeve into the cap and that for this reason the construction of respondent requiring a rotary movement to render it effective, does not infringe that of the petitioner.

In the application for the patent in suit this fourth claim, originally the seventh, read as we have quoted it omitting the words in italics. In this form it was promptly rejected by the Patent Office on reference to the Oetting patent, No. 642,825, and to the Kenney patent, No. 712,-686, and it is clear that the chief concern of the applicant thereafter was to distinguish his construction from that of Kenney, which is very similar to that of respondent. The Kenney socket has lugs in the cap and bayonet slots in the sleeve, to lock against longitudinal movement, as respondent's socket has, and also slots with open ends and locking holes similarly placed in the sleeve to lock against rotary movement when the lugs in the cap engage with them. The chief difference between the Kenney and respondent's socket is that in Kenney the lug passes down the slot to a position opposite the locking hole and

then with the rotary movement mounts and rides over the narrow strip of metal—"the bridge"—into the hole, while in the respondent's socket the lugs having plain faces ride on the metal near to the edge of the slot during the longitudinal movement and from that position pass into the locking holes with the rotative movement.

When his application was rejected by the Patent Office on reference to the Kenney patent thus described, the applicant, without objection or appeal, amended his claim seven (numbering it four) by adding the words in italics and in his explanatory "remarks," when submitting these amendments, it was said: "Claim 4, originally 7, is now *drawn to a specific structure* having advantages not found in either of the references cited. By transversely slitting the sheet metal shell and displacing the wall on one side of said slit to form a beveled or inclined projection the parts are permitted to be applied to each other *by simply inserting one within the other* without manually compressing the inner member." And again, "Kenney's device is adapted to *unlock by simply rotating one member upon another in the same manner that the parts are locked together*, no manual compression of the inner member being necessary."

Thus the patentee, in order to avoid infringing Kenney's construction, voluntarily restricted himself to a "specific structure" operative when the sleeve was "simply" inserted in the cap, without suggesting any rotary movement whatever, but, on the contrary, by his reference to Kenney as locking and unlocking by "simply rotating one member upon another," clearly implying that no such rotary movement was necessary in the adjustment of his socket. Having thus narrowed his claim against rotary movement in order to obtain a patent, the patentee may not by construction, or by resort to the doctrine of equivalents, give to the claim the larger scope which it might have had without the amendments, which amount to a

disclaimer of rotation as an operative feature of his device. *Shepard* v. *Carrigan*, 116 U. S. 593, 598; *Hubbell* v. *United States*, 179 U. S. 77, 80.

But that no rotary movement was implied in the use of "telescopically received" and "telescopically applied" in the patent in suit is further unmistakably shown by the frequent use of the same or equivalent expressions in the specification and claims of patentee's later patent, No. 916,812, *supra*, in which claims 1, 3, 13 and 14 relate almost wholly to an improvement which renders rotation of the members one upon the other impossible and which petitioner added to the construction of the patent in suit before putting the sockets upon the market. That the inventor did not intend to claim, and that he certainly did not disclose, that any such rotary movement was necessary in his socket as was required to render the socket of the respondent effective, is, we think, for these reasons, so clear that it is not necessary to consider the dictionary definitions of the words used, upon which the Circuit Court of Appeals, with sound reason, relied in reaching this same conclusion.

For the reasons thus elaborated, we conclude that the socket of the respondent does not infringe the fourth claim of the patent in suit because there is no claim made therein of a lock against rotative movement of the cap and sleeve upon each other, and also because the file-wrapper and the subsequent patent show that the disclosure is, and was intended to be, limited to a construction operative by direct longitudinal movement or thrust without such rotative movement.

The contention, pressed strenuously upon our attention, that the added open slot in the cap and projection on the sleeve provided for in the second patent were devised simply to secure the alignment of the projections and recesses of the first patent in making telescopic application of the two members to each other, is not con-

vincing in the presence of the fact that claims 1, 3, 13 and 14 of the second patent are devoted almost wholly to claiming that this improved construction is intended "to prevent relative rotative movement" of one member upon the other, while only claims 11 and 12 refer, quite incidentally, to what is now claimed to be the chief function of the added parts, that of a guide to the positioning of the recesses and projections of the first patent with reference to each other. Without a guide, the difficulty should not be very great of aligning projections and recesses distant from each other but a fraction of an inch when the edges of the cap and sleeve are in contact. The constructions held by the Circuit Court of Appeals of the Second Circuit to infringe the patent in suit, were so essentially different from that of the respondent that we regard discussion of them as quite unnecessary.

It results that the decree of the Circuit Court of Appeals as to claims 1 and 4 must be

Affirmed.

DECISIONS PER CURIAM, FROM MARCH 29, 1921, TO AND INCLUDING JUNE 6, 1921, NOT INCLUDING ACTION ON PETITIONS FOR WRITS OF CERTIORARI.

No. 198. MISSOURI, KANSAS & TEXAS RAILWAY COMPANY ET AL. *v.* HANNAH L. ZUBER. On writ of certiorari to the Supreme Court of the State of Oklahoma. Argued January 28, 1921. Decided April 11, 1921. *Per Curiam.* Dismissed for want of jurisdiction upon the authority of: (1) *Furness, Withy & Co.* v. *Yang-Tsze Insurance Association,* 242 U. S. 430; *Houston Oil Co.* v. *Goodrich,* 245 U. S. 440. (2) *California Powder Works* v. *Davis,* 151 U. S. 389, 393; *Cuyahoga River Power Co.* v. *Northern Realty Co.,* 244 U. S. 300, 303; *Bilby* v. *Stewart,* 246 U. S. 255, 257; *Farson, Son & Co.* v. *Bird,* 248 U. S. 268, 271. See writ of error dismissed, February 28, 1921, 255 U. S. 561. *Mr. M. D. Green,* with whom *Mr. Joseph M. Bryson, Mr. J. R. Cottingham, Mr. Clifford L. Jackson, Mr. Samuel W. Hayes, Mr. Gardiner Lathrop, Mr. C. S. Burg* and *Mr. Alex. Britton* were on the brief, for plaintiffs in error and petitioners. *Mr. Charles W. Smith,* for defendant in error and respondent, submitted.

No. 194. J. L. HUDSON *v.* O. L. HOPKINS, as COUNTY TREASURER, ETC.; and

No. 195. WILLIAM E. MCGUIRE, AS ADMINISTRATOR, ETC. *v.* E. J. MCCURDY, AS COUNTY TREASURER, ETC. Error to the Supreme Court of the State of Oklahoma. Submitted April 12, 1921. Decided April 18, 1921. *Per Curiam.* Dismissed for the want of jurisdiction upon the authority of § 237 of the Judicial Code, as amended by the Act of September 6, 1916, c. 448, § 2, 39 Stat. 726. *Mr. Elmer*

E. Grinstead for plaintiffs in error. *Mr. S. P. Freeling* for defendants in error.

No. 245. N. W. PALMER ET AL. *v.* RACHEAL KING ET AL. Error to the Supreme Court of the State of Oklahoma. Submitted March 21, 1921. Decided April 18, 1921. *Per Curiam.* Dismissed for the want of jurisdiction upon the authority of § 237 of the Judicial Code, as amended by the Act of September 6, 1916, c. 448, § 2, 39 Stat. 726. *Mr. C. S. Arnold* for plaintiffs in error. *Mr. Elmer D. Means* for defendants in error.

No. 716. HERBERT DARLINGTON *v.* HARRY W. MAGER, COLLECTOR OF INTERNAL REVENUE FOR THE FIRST DISTRICT OF ILLINOIS. Error to the District Court of the United States for the Northern District of Illinois. Argued April 14, 1921. Decided April 18, 1921. *Per Curiam.* Affirmed with costs, upon authority of the Act of February 24, 1919, c. 18, § 213a, 40 Stat. 1057, 1065; Act of September 8, 1916, c. 463, § 2 (a), 39 Stat. 756, 757; *Merchants' Loan & Trust Co.* v. *Smietanka*, 255 U. S. 509; *Eldorado Coal & Mining Co.* v. *Mager*, 255 U. S. 522; *Goodrich* v. *Edwards*, 255 U. S, 527; and *Walsh* v. *Brewster*, 255 U. S. 536. *Mr. Herbert Pope*, with whom *Mr. Rush C. Butler*, *Mr. James J. Forstall* and *Mr. E. B. Prettyman* were on the brief, for plaintiff in error. *The Solicitor General* for defendant in error.

No. 800. ULRICA DAHLGREN PIERCE, AS TRUSTEE, ETC. *v.* JOHN V. DAHLGREN. Appeal from the Circuit Court

of Appeals for the Sixth Circuit. Petition for a writ of certiorari and motion to dismiss submitted April 11, 1921. Decided April 18, 1921. *Per Curiam.* Dismissed for want of jurisdiction upon the authority of *Hull* v. *Burr*, 234 U. S. 712, 720; *St. Anthony Church* v. *Pennsylvania R. R. Co.*, 237 U. S. 575, 577; *Louisville & Nashville R. R. Co.* v. *Western Union Telegraph Co.*, 237 U. S. 300, 302; *Delaware, Lackawanna & Western R. R. Co.* v. *Yurkonis*, 238 U. S. 439, 444. *Mr. J. Warren Keifer* for appellant and petitioner. *Mr. Lawrence Maxwell, Mr. Frederic R. Coudert* and *Mr. Howard Thayer Kingsbury* for appellee and respondent. [Certiorari denied, see *post*, 692.]

No. —, ORIGINAL. *Ex parte:* IN THE MATTER OF THOMAS G. MORAN, PETITIONER. Submitted February 28, 1921. Decided April 25, 1921. Motion for leave to file petition for writs of certiorari, prohibition, and mandamus denied. *Mr. William J. Hennessey* for petitioner.

No. —, Original: *Ex parte:* IN THE MATTER OF HENRY O. HOLLANDER, PETITIONER. Submitted February 28, 1921. Decided April 25, 1921. Motion for leave to file petition for writs of certiorari, prohibition, and mandamus denied. *Mr. William J. Hennessey* for petitioner.

No. 311. CITY OF NEW YORK *v.* BROOKLYN UNION GAS COMPANY. Appeal from the District Court of the United States for the Southern District of New York. Argued April 29, 1921. Decided May 16, 1921. *Per Curiam.* Dismissed for the want of jurisdiction upon the

authority of the *City of New York* v. *Consolidated Gas Co.*, 253 U. S. 219. *Mr. Vincent Victory*, with whom *Mr. James A. Donnelly* and *Mr. Henry Hertzoff* were on the brief, for appellant. *Mr. William N. Dykman*, for appellee, submitted.

No. —, Original. *Ex parte:* IN THE MATTER OF EXPORTERS OF MANUFACTURERS' PRODUCTS, INC., PETITIONER. Submitted May 2, 1921. Decided May 16, 1921. Motion for leave to file petition for a writ of mandamus and/or a writ of prohibition herein denied. *Mr. Henry M. Ward* for petitioner.

No. —, Original. *Ex parte:* IN THE MATTER OF C. C. HARTWELL COMPANY, LIMITED, ET AL., PETITIONERS. Submitted May 2, 1921. Decided May 16, 1921. Motion for leave to file petition for a writ of mandamus herein denied. *Mr. William B. Grant* for petitioners.

No. —, Original. *Ex parte:* IN THE MATTER OF D. H. RIDDLE, PETITIONER. Submitted May 2, 1921. Decided May 16, 1921. Motion for leave to file petition for a writ of mandamus herein denied. *Mr. Benjamin Carter* for petitioner.

No. 288. HOUSTON & TEXAS CENTRAL RAILROAD COMPANY *v.* CITY OF ENNIS ET AL. Error to the Court of Civil Appeals, Fifth Supreme Judicial District, State of Texas. Argued April 26, 1921. Decided June 1, 1921. *Per Curiam.* Dismissed for want of jurisdiction upon the authority of § 237, Judicial Code, as amended by the

Act of September 6, 1916, c. 448, § 2, 39 Stat. 726. See writ of certiorari denied (252 U. S. 583). *Mr. Jesse Andrews*, with whom *Mr. J. L. Gammon* and *Mr. H. M. Garwood* were on the brief, for plaintiff in error. *Mr. Rhodes S. Baker*, with whom *Mr. William Thompson* was on the brief, for defendants in error.

No. 318. DWELLING BUILDING & LOAN ASSOCIATION ET AL. *v.* WINFIELD S. MACHENRY, TRUSTEE IN BANKRUPTCY. Appeal from the Circuit Court of Appeals for the Third Circuit. Submitted April 29, 1921. Decided June 1, 1921. *Per Curiam.* Dismissed for want of jurisdiction upon the authority of the Act of January 28, 1915, c. 22, § 4, 38 Stat. 803, as amended by the Act of September 6, 1916, c. 448, § 3, 39 Stat. 726, 727. *Mr. Joseph Gilfillan* and *Mr. George S. Graham* for appellants. *Mr. H. Edgar Barnes* and *Mr. Owen J. Roberts* for appellee.

No. —, Original. *Ex parte:* IN THE MATTER OF THE STATE OF LOUISIANA, PETITIONER. Submitted May 16, 1921. Decided June 1, 1921. Motion for leave to file petition for a writ of mandamus herein denied. *Mr. L. E. Hall* for petitioner.

No. 801. MCKITTRICK OIL COMPANY *v.* SOUTHERN PACIFIC RAILROAD COMPANY. Error to the District Court of Appeal, Second Appellate District, Division No. 1, of the State of California. Motion to dismiss or affirm submitted June 1, 1921. Decided June 6, 1921. *Per Curiam.* Dismissed for the want of jurisdiction upon the authority of § 237 of the Judicial Code, as amended by

the Act of September 6, 1916, c. 448, § 2, 39 Stat. 726. *Mr. George E. Whitaker* and *Mr. Fred Dennett* for plaintiff in error. *Mr. Frank Thunen* for defendant in error. [See *post*, 695.]

PETITIONS FOR WRITS OF CERTIORARI GRANTED, FROM MARCH 29, 1921, TO AND INCLUDING JUNE 6, 1921.

No. 766. NEW YORK, NEW HAVEN & HARTFORD RAILROAD COMPANY *v.* DAVID FRUCHTER, AN INFANT, ETC.; AND No. 767. NEW YORK, NEW HAVEN & HARTFORD RAILROAD COMPANY *v.* SAM FRUCHTER. April 11, 1921. Petitions for writs of certiorari to the Circuit Court of Appeals for the Second Circuit granted. *Mr. James W. Carpenter* for petitioner. *Mr. Leon Sanders* for respondents.

No. 776. AUDITORE CONTRACTING COMPANY, INC., ET AL. *v.* FOREIGN TRADE BANKING CORPORATION. April 11, 1921. Petition for a writ of certiorari to the Circuit Court of Appeals for the Second Circuit granted. *Mr. Alvin C. Cass* for petitioners. *Mr. John M. Woolsey* and *Mr. Delbert M. Tibbetts* for respondent. *The Solicitor General* and *Mr. A. F. Myers*, by leave of court, as *amici curiæ*.

No. 783. CHARLES W. ANDERSON, COLLECTOR OF INTERNAL REVENUE *v.* NEW YORK LIFE INSURANCE COMPANY. Motion to set aside order granting certiorari submitted April 11, 1921. Decided April 18, 1921. Order granting writ of certiorari herein set aside to enable a

resubmission of the petition after due notice to counsel for the respondent. *The Solicitor General* for petitioner. *Mr. James H. McIntosh* for respondent. [See 255 U. S. 568; also, *post*, 696.]

No. 840. GASTON, WILLIAMS & WIGMORE, OF CANADA, LIMITED *v.* PHILIP A. WARNER. April 18, 1921. Petition for a writ of certiorari to the Circuit Court of Appeals for the Second Circuit granted. *Mr. Cletus Keating* for petitioner. *Mr. Joseph P. Nolan* for respondent.

No. 846. JAMES S. MCKEE ET AL. *v.* BENJAMIN GRATZ. April 18, 1921. Petition for a writ of certiorari to the Circuit Court of Appeals for the Eighth Circuit granted. *Mr. Frank H. Sullivan, Mr. Lon O. Hocker* and *Mr. George F. Haid* for petitioners. *Mr. S. Mayner Wallace*, for respondent, concurring.

No. 880. SNAKE CREEK MINING & TUNNEL COMPANY *v.* MIDWAY IRRIGATION COMPANY ET AL. May 2, 1921. Petition for a writ of certiorari to the Circuit Court of Appeals for the Eighth Circuit granted. *Mr. H. R. MacMillan* and *Mr. John A. Marshall* for petitioner. *Mr. A. B. Irvine* for respondents. *Mr. J. F. Callbreath*, by leave of court, as *amicus curiæ*.

No. 901. SOUTHERN PACIFIC COMPANY ET AL. *v.* OLYMPIAN DREDGING COMPANY. June 1, 1921. Petition for a writ of certiorari to the Circuit Court of Appeals for the

Ninth Circuit granted. *Mr. E. J. Foulds* and *Mr. Elmer Westlake* for petitioners. *Mr. Thomas E. Haven* for respondent.

No. 898. UNITED STATES *v.* WESLEY L. SISCHO. June 6, 1921. Petition for a writ of certiorari to the Circuit Court of Appeals for the Ninth Circuit granted. *The Solicitor General* for the United States. No appearance for respondent.

No. 911. JOHN P. KLINE ET AL., ETC. *v.* BURKE CONSTRUCTION COMPANY. June 6, 1921. Petition for a writ of certiorari to the Circuit Court of Appeals for the Eighth Circuit granted. *Mr. Frank S. Quinn* and *Mr. William H. Arnold* for petitioners. No appearance for respondent.

No. 925. FEDERAL TRADE COMMISSION *v.* CURTIS PUBLISHING COMPANY. June 6, 1921. Petition for a writ of certiorari to the Circuit Court of Appeals for the Third Circuit granted. *The Solicitor General* and *Mr. Adrien F. Busick* for petitioner. *Mr. John G. Milburn, Mr. Joseph W. Welsh, Mr. John G. Milburn, Jr.,* and *Mr. Ralph B. Evans* for respondent.

No. 931. FEDERAL TRADE COMMISSION *v.* WINSTED HOSIERY COMPANY. June 6, 1921. Petition for a writ of certiorari to the Circuit Court of Appeals for the Second Circuit granted. *The Solicitor General* and *Mr. Adrien F. Busick* for petitioner. *Mr. Henry P. Molloy* for respondent.

No. 933. FRED BROWNE *v.* CHARLES B. THORN ET AL., PARTNERS, ETC. Error to the Circuit Court of Appeals for the Eighth Circuit. June 6, 1921. Petition for a writ of certiorari herein granted. *Mr. James B. McDonough* for plaintiff in error, in support of the petition. No appearance for defendants in error.

PETITIONS FOR WRITS OF CERTIORARI DENIED, FROM MARCH 29, 1921, TO AND INCLUDING JUNE 6, 1921.

No. 760. WILLIAM D. HAYWOOD ET AL. *v.* UNITED STATES. April 11, 1921. Petition for a writ of certiorari to the Circuit Court of Appeals for the Seventh Circuit denied. *Mr. Otto Christensen* for petitioners. *Mr. Assistant Attorney General Stewart* and *Mr. W. C. Herron* for the United States.

No. 752. J. B. FLOWERS ET AL. *v.* UNITED STATES. April 11, 1921. Petition for a writ of certiorari to the Circuit Court of Appeals for the Fifth Circuit denied. *Mr. W. F. Weeks* and *Mr. C. C. McDonald* for petitioners. No brief filed for the United States.

No. 763. ELLSWORTH H. GREEN ET AL. *v.* UNITED STATES. April 11, 1921. Petition for a writ of certiorari to the Circuit Court of Appeals for the Eighth Circuit denied. *Mr. Samuel Herrick, Mr. Ed. S. Vaught* and *Mr. John B. Dudley* for petitioners. *Mr. Assistant Attorney General Stewart* and *Mr. H. S. Ridgely* for the United States.

No. 764. WAGNER ELECTRIC MANUFACTURING COMPANY *v.* LAMAR LYNDON. April 11, 1921. Petition for a writ of certiorari to the Supreme Court of the State of Missouri denied. *Mr. Charles A. Houts* for petitioner. *Mr. Lawrence C. Kingsland* and *Mr. John D. Rippey* for respondent.

No. 769. MARY FLACK, ADMINISTRATRIX, ETC. *v.* ATCHISON, TOPEKA & SANTA FE RAILWAY COMPANY. April 11, 1921. Petition for a writ of certiorari to the Supreme Court of the State of Missouri denied. *Mr. John H. Atwood* and *Mr. Oscar S. Hill* for petitioner. *Mr. Cyrus Crane* for respondent.

No. 772. CHARLES O'CONNOR ET AL. *v.* JOHN SLAKER, ACTING ADMINISTRATOR, ETC., ET AL. April 11, 1921. Petition for a writ of certiorari to the Supreme Court of the State of Nebraska denied. *Mr. James M. Johnson* for petitioners. *Mr. John F. Kirkman*, p. p.

No. 773. JOHN BARTON PAYNE, AS AGENT, ETC. *v.* MATTHEW FOLEY. April 11, 1921. Petition for a writ of certiorari to the Supreme Judicial Court of the State of Maine denied. *Mr. Evan Shelby* and *Mr. Frank M. Libby* for petitioner. *Mr. Richard E. Harvey* for respondent.

No. 787. J. SIDNEY SMITH *v.* UNITED STATES. April 11, 1921. Petition for a writ of certiorari to the Circuit Court of Appeals for the Eighth Circuit denied. *Mr. John Lee Webster* for petitioner. *Mr. Assistant Attorney General Stewart* and *Mr. Roy C. McHenry* for the United States.

No. 788. CHARLES M. THOMPSON *v.* UNITED STATES. April 11, 1921. Petition for a writ of certiorari to the Circuit Court of Appeals for the Eighth Circuit denied. *Mr. John Lee Webster* for petitioner. *Mr. Assistant Attorney General Stewart* and *Mr. Roy C. McHenry* for the United States.

No. 789. CLYDE A. SMITH *v.* UNITED STATES. April 11, 1921. Petition for a writ of certiorari to the Circuit Court of Appeals for the Eighth Circuit denied. *Mr. John Lee Webster* for petitioner. *Mr. Assistant Attorney General Stewart* and *Mr. Roy C. McHenry* for the United States.

No. 825. EDWARD A. SHEDD ET AL. *v.* CALUMET CONSTRUCTION COMPANY. April 11, 1921. Petition for a writ of certiorari to the Circuit Court of Appeals for the Seventh Circuit denied. *Mr. Fred Barnett* for petitioners. No appearance for respondent.

No. 753. FILER & STOWELL COMPANY *v.* DIAMOND IRON WORKS. April 18, 1921. Petition for a writ of certiorari to the Circuit Court of Appeals for the Seventh Circuit denied. *Mr. W. G. Henderson, Mr. Frank E. Dennett* and *Mr. Louis A. Lecher* for petitioner. *Mr. Frank A. Whiteley* for respondent.

No. 765. PANAYIOTIS PANOULIAS *v.* NATIONAL EQUIPMENT COMPANY. April 18, 1921. Petition for a writ of certiorari to the Circuit Court of Appeals for the Second

Circuit denied. *Mr. Frank C. Briggs* for petitioner. *Mr. Livingston Gifford* and *Mr. William Quinby* for respondent.

No. 794. JOHN R. BAILEY *v.* MISSISSIPPI HOME TELEPHONE COMPANY. April 18, 1921. Petition for a writ of certiorari to the Circuit Court of Appeals for the Third Circuit denied. *Mr. Thomas M. B. Hicks* for petitioner. *Mr. J. Fred Schaffer* for respondent.

No. 800. ULRICA DAHLGREN PIERCE, AS TRUSTEE, ETC. *v.* JOHN V. DAHLGREN. Appeal from the Circuit Court of Appeals for the Sixth Circuit. April 18, 1921. Petition for a writ of certiorari herein denied. *Mr. J. Warren Keifer* for appellant, in support of the petition. *Mr. Lawrence Maxwell, Mr. Frederic R. Coudert* and *Mr. Howard Thayer Kingsbury*, for appellee, in opposition to the petition. [Appeal dismissed, see *ante*, 682.]

No. 815. SAMUEL VERNON ESTATE, INC. *v.* JOHN J. LYTTLE, AS RECEIVER AND TRUSTEE, ETC. April 18, 1921. Petition for a writ of certiorari to the Circuit Court of Appeals for the Second Circuit denied. *Mr. Frederick Seymour* for petitioner. *Mr. Emanuel J. Myers* for respondent.

No. 833. SEABOARD TRANSPORTATION COMPANY *v.* BOSTON, CAPE COD & NEW YORK CANAL COMPANY. April 18, 1921. Petition for a writ of certiorari to the Circuit Court of Appeals for the First Circuit denied.

Mr. Edward E. Blodgett for petitioner. *Mr. Thomas H. Mahony* for respondent.

No. 834. JOHN W. YATES *v.* CHARLES R. SMITH, EXECUTOR, ETC., ET AL. April 18, 1921. Petition for a writ of certiorari to the Circuit Court of Appeals for the Third Circuit denied. *Mr. Samuel E. Darby* for petitioner. No appearance for respondents.

No. 836. STANDARD PORTLAND CEMENT COMPANY *v.* J. R. FOLEY. April 18, 1921. Petition for a writ of certiorari to the Circuit Court of Appeals for the Fifth Circuit denied. *Mr. Augustus Benners* for petitioner. No brief filed for respondent.

No. 841. WILLIAM BARBER *v.* OTIS MOTOR SALES COMPANY. April 18, 1921. Petition for a writ of certiorari to the Circuit Court of Appeals for the Second Circuit denied. *Mr. Samuel E. Darby* for petitioner. *Mr. Oscar W. Jeffrey* and *Mr. Robert D. Eggleston* for respondent.

No. 842. CITY OF NEW YORK *v.* LYNDON R. CONNETT ET AL., ETC. April 18, 1921. Petition for a writ of certiorari to the Circuit Court of Appeals for the Second Circuit denied. *Mr. Vincent Victory* for petitioner. *Mr. Samuel Seabury* for respondents.

No. 861. STANDARD OIL COMPANY, AS OWNER, ETC. *v.* THE STEAMSHIP FALLS CITY, ETC. April 18, 1921. Petition for a writ of certiorari to the Circuit Court of Ap-

peals for the Fourth Circuit denied. *Mr. J. Parker Kirlin, Mr. John M. Woolsey, Mr. Edward R. Baird, Jr.*, and *Mr. Robert S. Erskine* for petitioner. *Mr. H. H. Little* for respondent.

No. 782. GEORGE N. BAXTER *v.* WILLIAM M. SAFFORD ET AL. April 25, 1921. Petition for a writ of certiorari to the Circuit Court of Appeals for the Sixth Circuit denied. *Mr. George N. Baxter* pro se. *Mr. Lawrence Maxwell, Mr. Charles P. Rogers, Mr. Henry H. Glassie, Mr. B. E. Hinton* and *Mr. Constant Southworth* for respondents.

No. 790. CARL A. MARTIN ET AL., ETC. *v.* PRESIDIO MINING COMPANY ET AL. April 25, 1921. Petition for a writ of certiorari to the Circuit Court of Appeals for the Ninth Circuit denied. *Mr. William Denman* for petitioners. *Mr. R. T. Harding, Mr. Henry E. Monroe* and *Mr. J. J. Dunne* for respondents.

No. 780. J. C. DYSART *v.* UNITED STATES. April 25, 1921. Petition for a writ of certiorari to the Circuit Court of Appeals for the Fifth Circuit denied. *Mr. Cecil H. Smith* and *Mr. William H. Atwell* for petitioner. *Mr. Assistant Attorney General Stewart* and *Mr. W. C. Herron* for the United States.

No. 781. BOSTON & MAINE RAILROAD *v.* TIMOTHY J. DESMOND. April 25, 1921. Petition for a writ of certiorari to the Superior Court of the State of Massachusetts denied. *Mr. Frederick N. Wier* for petitioner. *Mr. James H. Vahey* for respondent.

No. 797. JOSEPH OPLE *v.* GEORGE P. WEINBRENNER, SHERIFF, ETC.;

No. 798. EARL MILLER *v.* GEORGE P. WEINBRENNER, SHERIFF, ETC.; AND

No. 799. LEO CLYNE *v.* GEORGE P. WEINBRENNER, SHERIFF, ETC. April 25, 1921. Petition for writs of certiorari to the Supreme Court of the State of Missouri denied. *Mr. Charles A. Houts* for petitioners. No appearance for respondent.

No. 801. MCKITTRICK OIL COMPANY *v.* SOUTHERN PACIFIC RAILROAD COMPANY. Error to the District Court of Appeal, Second Appellate District, Division No. 1, State of California. April 25, 1921. Petition for a writ of certiorari herein denied. *Mr. Fred Dennett* and *Mr. George E. Whitaker*, for plaintiff in error, in support of the petition. *Mr. Frank Thunen* and *Mr. A. A. Hoehling, Jr.*, for defendant in error, in opposition to the petition. [See *ante*, 685.]

No. 843. LOUIS KARASIK ET AL., AS TRUSTEES, ETC. *v.* HENRY DOSCHER ET AL., AS EXECUTORS, ETC. April 25, 1921. Petition for a writ of certiorari to the Circuit Court of Appeals for the Second Circuit denied. *Mr. Samuel Evans Maires* for petitioners. *Mr. Henry F. Cochrane* for respondents.

No. 873. JOSEPH ROSENBLATT *v.* UNITED STATES. April 25, 1921. Petition for a writ of certiorari to the Circuit Court of Appeals for the Second Circuit denied. *Mr. Charles Hershenstein* for petitioner. *Mr. Assistant Attorney General Stewart* and *Mr. W. C. Herron* for the United States.

No. 874. SAMUEL DAVIDSON *v.* UNITED STATES. April 25, 1921. Petition for a writ of certiorari to the Circuit Court of Appeals for the Second Circuit denied. *Mr. Allan R. Campbell* and *Mr. Mark Hyman* for petitioner. *Mr. Assistant Attorney General Stewart* and *Mr. W. C. Herron* for the United States.

No. 783. CHARLES W. ANDERSON, COLLECTOR OF INTERNAL REVENUE *v.* NEW YORK LIFE INSURANCE COMPANY. May 2, 1921. Writ of certiorari heretofore issued recalled and petition for a writ of certiorari to the Circuit Court of Appeals for the Second Circuit denied. *The Solicitor General* for petitioner. *Mr. James H. McIntosh* for respondent. [See *ante*, 686.]

No. 818. ERIE RAILROAD COMPANY *v.* FRED D. WARD. May 2, 1921. Petition for a writ of certiorari to the Supreme Court of the State of New York denied. *Mr. Halsey Sayles* for petitioner. *Mr. Thomas A. Sullivan* for respondent.

No. 821. ARTHUR A. JONES ET AL. *v.* GREGORY PAGE, RECEIVER, ETC., ET AL. May 2, 1921. Petition for a writ of certiorari to the Supreme Court of the State of New Mexico denied. *Mr. Chapin Brown* for petitioners. No appearance for respondents.

No. 824. AL WEATHERS *v.* UNITED STATES. May 2, 1921. Petition for a writ of certiorari to the Circuit

Court of Appeals for the Ninth Circuit denied. *Mr. Charles J. Heggerty* and *Mr. O. P. Hubbard* for petitioner. *Mr. Assistant Attorney General Stewart* and *Mr. W. C. Herron* for the United States.

No. 826. BULLOCK TRACTOR COMPANY *v.* J. HERBERT KNAPP ET AL., PARTNERS. May 2, 1921. Petition for a writ of certiorari to the Circuit Court of Appeals for the Ninth Circuit denied. *Mr. Frank Davis, Jr., Mr. John S. Miller, Mr. Merritt Starr, Mr. Edward Osgood Brown, Mr. Thomas E. Haven* and *Mr. James C. McMath* for petitioner. *Mr. Phil D. Swing* for respondents.

No. 850. LOUIS SABLOWSKI ET AL. *v.* UNITED STATES. May 2, 1921. Petition for a writ of certiorari to the Circuit Court of Appeals for the Second Circuit denied. *Mr. William J. Fallon* for petitioners. *The Solicitor General* and *Mr. Robert P. Frierson* for the United States.

No. 851. ASSOCIATED OIL COMPANY *v.* WALTER L. MILLER ET AL. May 2, 1921. Petition for a writ of certiorari to the Circuit Court of Appeals for the Fifth Circuit denied. *Mr. James A. Baker* for petitioner. *Mr. Luther Nickels* for respondents.

No. 863. CLIFFORD E. TREAT *v.* REDTOP ELECTRIC COMPANY, INC. May 2, 1921. Petition for a writ of certiorari to the Circuit Court of Appeals for the Second

Circuit denied. *Mr. Frederick S. Lyon* for petitioner. *Mr. Henry J. Lucke* and *Mr. Robert Watson* for respondent.

No. 869. JAMES C. DAVIS, DIRECTOR GENERAL OF RAILROADS, ETC. *v.* CENA I. BAECHTEL ET AL. Error to the Court of Appeals of the State of Maryland. May 2, 1921. Petition for a writ of certiorari herein denied. *Mr. Frederic D. McKenney* and *Mr. John Spalding Flannery*, for plaintiff in error, in support of the petition. No appearance for defendants in error.

No. 872. CHICAGO RAILWAY EQUIPMENT COMPANY ET AL. *v.* HENRY D. LAUGHLIN. May 2, 1921. Petition for a writ of certiorari to the Circuit Court of Appeals for the Seventh Circuit denied. *Mr. Harrison Musgrave* and *Mr. Henry R. Platt* for petitioners. *Mr. Louis E. Hart* for respondent.

No. 881. FORD MOTOR COMPANY *v.* HOTEL WOODWARD COMPANY. May 2, 1921. Petition for a writ of certiorari to the Circuit Court of Appeals for the Second Circuit denied. *Mr. John W. Davis*, *Mr. Alfred Lucking* and *Mr. James M. Beck* for petitioner. *Mr. Stephen C. Baldwin* and *Mr. Charles H. Tuttle* for respondent.

No. 886. MICHIGAN CENTRAL RAILROAD COMPANY *v.* C. A. GUSTAFSON ET AL., COPARTNERS, ETC. May 16, 1921. Petition for a writ of certiorari to the Supreme Court of the State of Illinois denied. *Mr. Ralph M. Shaw* and *Mr.*

Frank E. Robson for petitioner. *Mr. Hobart P. Young* for respondents.

No. 823. JOHN W. KEOGH *v.* CHICAGO & NORTHWESTERN RAILWAY COMPANY ET AL. Error to the Circuit Court of Appeals for the Seventh Circuit. May 16, 1921. Petition for a writ of certiorari herein denied. *Mr. H. P. Young*, for plaintiff in error, in support of the petition. *Mr. R. V. Fletcher, Mr. Bruce Scott, Mr. O. W. Dynes, Mr. F. W. Dickinson* and *Mr. Walter H. Jacobs*, for defendants in error, in opposition to the petition.

No. 844. CLARK T. HENDERSON *v.* COMMISSIONER OF PATENTS. May 16, 1921. Petition for a writ of certiorari to the Court of Appeals of the District of Columbia denied. *Mr. Melville Church, Mr. Wylie C. Margeson* and *Mr. Edwin B. H. Tower, Jr.*, for petitioner. No brief filed for respondent.

No. 847. MISSOURI, KANSAS & TEXAS RAILWAY COMPANY OF TEXAS ET AL. *v.* UNITED STATES MORTGAGE & TRUST COMPANY ET AL., TRUSTEES, ETC. May 16, 1921. Petition for a writ of certiorari to the Circuit Court of Appeals for the Fifth Circuit denied. *Mr. Alexander H. McKnight* for petitioners. *Mr. Francis Marion Etheridge, Mr. Alfred A. Cook* and *Mr. William Greenough* for respondents.

No. 848. JAMES D. HARDIN *v.* UNION TRUST COMPANY OF PHILADELPHIA. May 16, 1921. Petition for a writ of certiorari to the Circuit Court of Appeals for the Eighth

Circuit denied. *Mr. R. P. Stewart* for petitioner. *Mr. Chambers Kellar* for respondent.

No. 860. FRED B. GRANT ET AL. *v.* UNITED STATES. May 16, 1921. Petition for a writ of certiorari to the Circuit Court of Appeals for the Sixth Circuit denied. *Mr. John L. Rich* and *Mr. T. M. Wampler* for petitioners. *The Solicitor General* and *Mr. Robert P. Frierson* for the United States.

No. 865. DIRECTOR GENERAL OF RAILROADS *v.* SARAH A. WILSON, ADMINISTRATRIX, ETC. May 16, 1921. Petition for a writ of certiorari to the Supreme Court of the State of New Jersey denied. *Mr. George A. Bourgeois* and *Mr. Harry R. Coulomb* for petitioner. *Mr. James Mercer Davis* for respondent.

No. 877. CHARLES VINCENTI ET AL. *v.* UNITED STATES. May 16, 1921. Petition for a writ of certiorari to the Circuit Court of Appeals for the Fourth Circuit denied. *Mr. Ogle Marbury* and *Mr. Philip B. Perlman* for petitioners. *Mrs. Annette Abbott Adams*, Assistant Attorney General, for the United States.

No. 882. NETTIE L. SCOTT *v.* ELIZABETH K. DEFREIS, NEE PILIPO. May 16, 1921. Petition for a writ of certiorari to the Circuit Court of Appeals for the Ninth Circuit denied. *Mr. Frederick Milverton* for petitioner. *Mr. Daniel W. O'Donoghue* and *Mr. A. A. Alexander* for respondent.

No. 875. PRINCESS AMUSEMENT COMPANY *v.* JAKE WELLS. June 1, 1921. Petition for a writ of certiorari to the Circuit Court of Appeals for the Sixth Circuit denied. *Mr. T. T. McCarley* for petitioner. No appearance for respondent.

No. 885. ALEXIS GEORGIAN *v.* BYRON H. UHL, ACTING COMMISSIONER OF IMMIGRATION, ETC. June 1, 1921. Petition for a writ of certiorari to the Circuit Court of Appeals for the Second Circuit denied. *Mr. Walter Nelles* for petitioner. No brief filed for respondent.

No. 893. JACQUES ROUSSO *v.* HARRY SOLOMON. June 1, 1921. Petition for a writ of certiorari to the Court of Appeals of the District of Columbia denied. *Mr. Joshua R. H. Potts* for petitioner. *Mr. William F. Hall* for respondent.

No. 896. HERMAN & HERMAN, INC. *v.* THE STEAMSHIP OWEGO, HER ENGINE, ETC. June 1, 1921. Petition for a writ of certiorari to the Circuit Court of Appeals for the Second Circuit denied. *Mr. Homer L. Loomis* for petitioner. No appearance for respondent.

No. 897. CUNO H. RUDOLPH ET AL., COMMISSIONERS, ETC., ET AL. *v.* MOLLIE SCHWARTZ. June 1, 1921. Petition for a writ of certiorari to the Court of Appeals of the District of Columbia denied. *Mr. Levi H. David* for petitioners. *Mr. W. Gwynn Gardiner* for respondent.

No. 900. WALKER BROS. COMPANY *v.* W. & H. WALKER, INC., ET AL. June 1, 1921. Petition for a writ of certiorari to the Circuit Court of Appeals for the First Circuit denied. *Mr. Odin Roberts* for petitioner. *Mr. Geo. R. Nutter* and *Mr. Jacob J. Kaplan* for respondents.

No. 903. J. E. SISTRUNK *v.* J. T. PENDLETON, JUDGE. June 1, 1921. Petition for a writ of certiorari to the Supreme Court of the State of Georgia denied. *Mr. J. E. Sistrunk* pro se. No appearance for respondent.

No. 905. MRS. ADDIE PROHASKA, WIDOW, ETC., ET AL. *v.* ST. PAUL FIRE & MARINE INSURANCE COMPANY. June 1, 1921. Petition for a writ of certiorari to the Circuit Court of Appeals for the Fifth Circuit denied. *Mr. Frederick S. Tyler* and *Mr. John D. Grace* for petitioners. *Mr. Geo. H. Terriberry* for respondent.

No. 711. MARIE E. SCHEUERLE, ADMINISTRATRIX, ETC. *v.* ONEPIECE BIFOCAL LENS COMPANY. June 6, 1921. Petition for a writ of certiorari to the District Court of the United States for the District of Indiana denied. *Mr. Arthur E. Paige* for petitioner. *Mr. V. H. Lockwood* for respondent.

No. 871. STATE TAX COMMISSIONER OF THE STATE OF NEW YORK *v.* PEOPLE OF THE STATE OF NEW YORK EX REL. ALPHA PORTLAND CEMENT COMPANY. June 6, 1921. Petition for a writ of certiorari to the Supreme Court of

the State of New York denied. *Mr. Claude T. Dawes* for petitioner. *Mr. Louis H. Porter* for respondent.

No. 908. OLD DOMINION BEVERAGE CORPORATION *v.* COCA-COLA COMPANY. June 6, 1921. Petition for a writ of certiorari to the Circuit Court of Appeals for the Fourth Circuit denied. *Mr. William L. Symons* for petitioner. *Mr. Harold Hirsh* and *Mr. Edward S. Rogers* for respondent.

No. 909. W. E. HAMILTON ET AL. *v.* DE CAMP GLASS CASKET COMPANY ET AL. June 6, 1921. Petition for a writ of certiorari to the Circuit Court of Appeals for the Sixth Circuit denied. *Mr. Charles C. Moore* for petitioners. *Mr. J. B. Sizer* and *Mr. J. Read Voight* for respondents.

No. 914. LOU FRAZIER, ADMINISTRATRIX, ETC. *v.* INTERSTATE RAILROAD COMPANY. June 6, 1921. Petition for a writ of certiorari to the Circuit Court of Appeals for the Fourth Circuit denied. *Mr. William H. Werth* for petitioner. No appearance for respondent.

No. 916. GUSTAV H. JACOBSON *v.* UNITED STATES;
No. 917. ALBERT H. WEHDE *v.* UNITED STATES; AND
No. 918. GEORGE PAUL BOEHM *v.* UNITED STATES.
June 6, 1921. Petitions for writs of certiorari to the Circuit Court of Appeals for the Seventh Circuit denied. *Mr. Henry W. Freeman* and *Mr. Michael L. Igoe* for petitioners. *Mr. Assistant Attorney General Stewart* and *Mr. W. C. Herron* for the United States.

No. 921. LEHIGH VALLEY RAILROAD COMPANY *v.* JOHN LYSAGHT, LIMITED. June 6, 1921. Petition for a writ of certiorari to the Circuit Court of Appeals for the Second Circuit denied. *Mr. Lindley M. Garrison, Mr. Edgar H. Boles, Mr. George S. Hobart* and *Mr. Charles A. Boston* for petitioner. *Mr. W. Kintzing Post* for respondent.

No. 922. LEHIGH VALLEY RAILROAD COMPANY *v.* ALLIED MACHINERY COMPANY OF AMERICA. June 6, 1921. Petition for a writ of certiorari to the Circuit Court of Appeals for the Second Circuit denied. *Mr. Lindley M. Garrison, Mr. Edgar H. Boles, Mr. George S. Hobart* and *Mr. Charles A. Boston* for petitioner. *Mr. Hartwell Cabell* for respondent.

No. 923. IKE APPLEBAUM *v.* UNITED STATES. June 6, 1921. Petition for a writ of certiorari to the Circuit Court of Appeals for the Seventh Circuit denied. *Mr. Chester H. Krum* for petitioner. No brief filed for the United States.

No. 930. WILLIAM GREEN *v.* THOMAS B. FELDER, RECEIVER, ETC., ET AL. June 6, 1921. Petition for a writ of certiorari to the Circuit Court of Appeals for the Second Circuit denied. *Mr. Francis M. Scott* and *Mr. William J. Hughes* for petitioner. *Mr. Frederic R. Kellogg* for respondents. *The Solicitor General,* by leave of court, filed certain suggestions on behalf of the United States.

CASES DISPOSED OF WITHOUT CONSIDERATION BY THE COURT, FROM MARCH 29, 1921, TO AND INCLUDING JUNE 6, 1921.

No. 310. J. Q. SMITH, ATTORNEY GENERAL OF THE STATE OF ALABAMA, ET AL. *v.* WOFFORD OIL COMPANY. Appeal from the District Court of the United States for the Middle District of Alabama. April 11, 1921. Dismissed, per stipulation. *Mr. Lawrence E. Brown* for appellants. *Mr. John P. Tillman* for appellee.

No. 509. ERNEST B. DANE *v.* FRED J. BURRELL, TREASURER, ETC. Error to the Supreme Judicial Court of the State of Massachusetts. April 14, 1921. Dismissed with costs, on motion of counsel for plaintiff in error. *Mr. Charles F. Choate, Jr.*, and *Mr. Philip Nichols* for plaintiff in error. *Mr. Wm. Harold Hitchcock* for defendant in error.

No. 532. WISCONSIN MINNESOTA LIGHT & POWER COMPANY *v.* RAILROAD COMMISSION OF WISCONSIN ET AL. Appeal from the District Court of the United States for the Western District of Wisconsin. April 21, 1921. Dismissed, per stipulation. *Mr. Andrew Lees* for appellant. *Mr. Ralph M. Hoyt* for appellees.

No. 287. HERMAN WESSELS *v.* JOHN D. MCDONALD, COMMANDANT OF THE UNITED STATES NAVY YARD, BROOKLYN, NEW YORK. Appeal from the District Court of the United States for the Eastern District of New York.

April 21, 1921. Dismissed, per stipulation. *Mr. Thomas J. O'Neill* and *Mr. William H. Daly* for appellant. *The Attorney General* for appellee.

No. 308. HENRY ALBERS *v.* UNITED STATES. On writ of certiorari to the Circuit Court of Appeals for the Ninth Circuit. April 27, 1921. Judgment reversed on confession of error, on motion of *The Solicitor General* for the United States. *Mr. James B. Kerr* and *Mr. Charles H. Carey* for petitioner.

No. 470. CHARLES F. HUNT, EXECUTOR, ETC. *v.* UNITED STATES. Appeal from the Court of Claims. May 16, 1921. Stricken from the docket, on motion of counsel for appellant. *Mr. Burt E. Barlow* for appellant. *The Attorney General* for the United States.

No. 5. UNITED STATES *v.* AMERICAN CAN COMPANY ET AL. Appeal from the District Court of the United States for the District of Maryland. June 6, 1921. Dismissed, on motion of *The Solicitor General* for the United States. *Mr. Lemuel A. Welles* for appellees.

INDEX.

PAGE

ACCOUNTING. See Procedure, II, 6–8.

ADMINISTRATIVE DECISIONS. See Indians, 5, 6, 8–10, 14–19; Interstate Commerce Acts, III; Mails; Public Lands, I; II, 6, 7, 11; Trade-Marks; Waters, 10.

ADMIRALTY:

1. *Jurisdiction; Vessels of Foreign Governments. Quære:* Whether merchant vessel operated by foreign government is immune from process in suit for wharfage and supplies, and whether immunity can be claimed for ship of government which has severed and not resumed diplomatic relations? *Ex parte Hussein Lutfi Bey* 616

2. *Id. Prohibition and Mandamus,* to restrain excess of jurisdiction by District Court, is discretionary when jurisdiction is debatable. *Id.*

3. *Id. Prohibition,* issued by this court (Jud. Code, § 234) to prevent District Court exceeding jurisdiction, even where there is remedy by appeal. *Ex parte State of New York, No. 1* 490

4. *Id. Suit Against State.* Admiralty suit *in personam* cannot be brought against State, without consent, by individual, whether a citizen of State or not. *Id.*

5. *Id.* Whether suit is against State determined, not by names of titular parties, but by nature and effect of proceeding. *Id.*

6. *Id. State Officers.* Where officer impleaded in suits *in rem* against private tugs for damages while tugs were under charter to him officially, *held* that proceedings against him were *in personam* and were essentially proceedings against State, beyond jurisdiction of District Court. *Id.*

7. *Id. Vessel. Public Status* may be established, *prima facie,* at least, by suggestion of attorney general of State, in con-

ADMIRALTY—*Continued.* PAGE

nection with special appearance and objection to jurisdiction. *Ex parte State of New York, No. 2* 503

8. *Id. State Property; Immunity.* Vessel owned by State and employed for governmental purposes exempt from seizure in suit for damages by negligent operation. *Id.*

9. *Charterparty*, for vessel to be named, with no provision for substitution, under which vessel has been selected, regarded as contract for that particular vessel. *Texas Co.* v. *Hogarth Shipping Co* 619

10. *Id. Requisition; War Purposes.* British ship of British corporation *held* subject to requisition by British Government while in British waters preparing for service under voyage charterparty made here with American corporation. *Id.*

11. *Id.* Telegraphic requisition followed by use of ship as transport, *held* valid. *Id.*

12. *Id. Performance.* Owner excused where ship rendered unavailable by government requisition, not provided for in contract. *Id.*

13. *Id. Implied Condition* of contract that requisition terminates contract and absolves parties from liability. *Id.*

14. *Id. Proof of Foreign Requisition.* Effect of certificate of British Ambassador as *amicus curiæ*. *Id.*

AGENTS. See **Contracts**, 9, 10; **Indians**, 1, 2; **Interstate Commerce Acts**, I, 1–3; **Telegraph Companies.**
Of State. See **Parties**, 1.
Service of process on. See **Evidence**, 4.

ALIENS. See **Chinese Exclusion Acts.**

AMENDMENT. See **Pleading**, 3; **Patents for Inventions**, 3, 4.

ANTI-NARCOTIC ACT. See **Narcotic Drugs.**

ANTI-TRUST ACT:

1. *Monopolies; Re-sale Prices.* Agreement between manufacturer, jobbers and wholesalers to maintain re-sale prices

ANTI-TRUST ACT—*Continued.* PAGE

may be implied from course of dealing or other circumstances. *Frey & Son* v. *Cudahy Packing Co.* 208

2. *Id.* Indication of sales plan to jobbers fixing prices below which they were not to sell to retailers, and coöperation of jobbers by selling at prices named, do not establish combination forbidden by act. *Id.*

APPEAL AND ERROR. See **Jurisdiction; Procedure.**

APPEARANCE. See **Attachment; Jurisdiction, III; VI, 5.**

APPROPRIATIONS. See **Contracts, 3–6; Indians, 9, 10.**

ARKANSAS. See **Boundaries, 1; Taxation, II, 24.**

ARMY:

Transportation; rates. See **Interstate Commerce Acts, I, 4–6.**

ASSAULT. See **Criminal Law, 3–5.**

ASSIGNMENT. See **Claims.**

For benefit of creditors. See **Bankruptcy Act, 1.**

ASSIGNMENT OF ERRORS. See **Jurisdiction, IV, 10.**

ATTACHMENT:

1. *Foreign; Appearance; Special Bail. Delaware* law, conditioning defendant's right to appear and contest merits upon giving special bail or surety's undertaking, in force since colonial days, finding its origin in Custom of London and familiar in common law and admiralty, upheld. *Ownbey* v. *Morgan* 94

2. *Id. Hardship in Particular Case.* Inability of defendant, through misfortune, to furnish security, is immaterial. *Id.*

3. *Id. Notice; Presumption.* One who acquires property in State and departs is presumed to have consented to rule of foreign attachment, already in force. *Id.*

4. *Id. Non-resident Individuals and Foreign Corporations.* Distinction in state law, requiring former to furnish special security before appearing and defending but allowing latter to defend on security of attachment lien, not a denial to individuals of equal protection. *Id.*

BAIL. See **Attachment.** PAGE

BANKRUPTCY ACT:

1. *Jurisdiction; Summary Proceedings; Adverse Claim Against Trustee.* Claim of assignee for benefit of creditors for compensation and expenses, before adjudication, *held* an adverse claim not subject to summary disposition in bankruptcy proceedings. *Galbraith* v. *Vallely* 45

2. *Life Insurance; Payment to Beneficiary Without Notice.* Company which paid policy, after death of insured and without notice of pending bankruptcy or claim by trustee, not liable for surrender value under § 70a. *Frederick* v. *Fidelity Insurance Co* 395

BANKS AND BANKING. See **Jurisdiction,** VI, 13, 14; **National Banks.**

State Banks; Presentation of Checks; Enjoining Federal Reserve Bank. Right of state banks to enjoin unwarranted accumulation and presentation of checks in pursuance of a scheme to compel them to become members of Federal System. *American Bank & Trust Co.* v. *Federal Reserve Bank* 350

BILL OF LADING. See **Carriers,** 7, 8; **Interstate Commerce Acts,** I, 1, 2.

BONDS. See **National Banks.**

Injunction. See **Jurisdiction,** VI, 15–17.

BOUNDARIES:

1. *Arkansas-Mississippi; Final Decree,* confirming report of commissioners, establishing boundary, and allowing expenses and costs. *Arkansas* v. *Mississippi* 28

2. *New York—New Jersey; Pollution of Waters.* Right of New York to enjoin New Jersey project for discharging sewage into New York Bay, without regard to location of boundary or New York's claim of exclusive jurisdiction over Bay. *New York* v. *New Jersey* 296

3. *Oklahoma—Texas; Former Decree; Res Judicata.* In suit to establish boundary along Red River, as fixed by Treaty of 1819, former decree (*United States* v. *Texas,* 162 U. S. 1), *held* conclusive. *Oklahoma* v. *Texas* 70

BOUNDARIES—*Continued.* PAGE

4. *Id.* Former decree not only concluded parties as to part of boundary bordering upon Greer County, but settled construction of treaty as to entire course of river where it marks boundary between territory then of United States and Texas. *Id.*

5. *Id. Interlocutory Decree,* declaring state boundary, setting case for hearing as to more definite location, directing as to evidence taken and taking of further evidence, and appointing commissioner. *Oklahoma* v. *Texas*. 608

BRIBERY. See **Criminal Law,** 1.

BUILDINGS:
Rents. See **Constitutional Law,** I, 2; III, 2; IX, 5–9; XII, 5, 6, 20.
Regulations. See **Municipal Corporations,** 1–3.

BURDEN OF PROOF. See **Evidence,** 2, 3.

CABLE COMPANIES:
Rates; limitation of liability. See **Interstate Commerce Acts,** II.

CAMPAIGN EXPENDITURES. See **Constitutional Law,** V.

CARRIERS. See **Employer and Employee; Interstate Commerce Acts.**
Charterparty. See **Admiralty,** 9–14.
Mail transportation. See **Mails.**
Reparation orders. See **Interstate Commerce Acts,** III.
Uniform bill of lading. See *id.*, I, 1, 2; 7, 8, *infra.*
Telegraph rates; limitation of liability. See **Interstate Commerce Acts,** II.
Local improvements. See **Taxation,** II, 23–27.
Franchise. See *id.*, II, 13–21.

1. *Federal Control; Employees; Bribery.* Baggage porter employed in station operated by United States during federal control is not a person acting on behalf of United States in an official function, within Crim. Code, § 39. *Krichman* v. *United States*. 363

CARRIERS—*Continued.* PAGE

2. *Federal Control; Actions.* Corporation not liable, at common law or under § 10, Federal Control Act, upon action for wages arising out of operation through Director General. *Missouri Pac. R. R.* v. *Ault* 554

3. *Id. Parties; Director General.* Right to sue owner-company or Government's operating agency, where action arose before and where it arose during government operation. *Id.*

4. *Id. Substitution.* Order that suits arising during federal control be brought against Director General and providing for substitution in pending suits, sustained. *Id.*

5. *Id. Penalties; State Law.* Section 10 subjecting carriers to all laws and liabilities as common carriers, arising under state, federal, or common law, and § 15 continuing state police regulations, do not permit action against Director General for penalty. *Id.* See *Norfolk-Southern R. R.* v. *Owens* 565

6. *Id.* Whether liability imposed by state law is compensation or penalty, requires application of federal law. *Id.*

7. *Delivery; Warehouseman or Carrier; Uniform Interstate Bill of Lading.* Provision that property not removed within 48 hours after notice of arrival may be kept in car or depot subject to charge for storage and to carrier's responsibility as warehouseman only, or may be stored in public warehouse at owner's cost and risk, subject to lien for freight, renders carrier liable *qua* carrier during 48-hour period pending delivery. *Michigan Cent. R. R.* v. *Mark Owen & Co* 427

8. *Id.* Where car placed on public delivery track, and consignee, having been notified, accepted car and proceeded to unload, *held*, not a delivery of goods and that loss of part, during unloading and within 48-hour period, must be borne by carrier. *Id.*

9. *Rates; Mistake.* Commission merchant who received shipment and paid charges demanded, which were less than lawful rates established under Commerce Act, *held* liable for difference irrespective of contract and as matter of law. *New York Central R. R.* v. *York & Whitney Co* 406

10. *Id. Long and Short Haul.* Missouri statute sustained. *Missouri Pac. Ry.* v. *McGrew Coal Co* 134

CARRIERS—*Continued.* PAGE

11. *Id. Overcharges; Recovery.* Whether under statute shipper may recover overcharges which he himself did not pay is a question of state law. *Id.*

CERTIORARI. See **Jurisdiction,** IV, 8, 14.

CHARTERPARTY. See **Admiralty,** 9–14.

CHECKS. See **Banks and Banking.**

CHINESE EXCLUSION ACTS:

Laborers; Wife and Children. Chinese person who lawfully entered as minor son of Chinese merchant, but whose status here became that of laborer, *held* not entitled to bring in wife and children, married and born during his temporary absence in China. *Yee Won* v. *White*. 399

CHOCTAW INDIANS. See **Contracts,** 9, 10; **Taxation,** II, 25–27.

CIRCUIT COURT OF APPEALS. See **Jurisdiction,** IV, 8, 10, 12; V.

CITIES. See **Municipal Corporations; Taxation,** II, 3, 25–27.

Ordinance rates. See **Jurisdiction,** VI, 15–17.

Rent regulation. See **Constitutional Law,** I, 2; III, 2; IX, 5–9; XII, 5, 6, 20.

CITIZENSHIP. See **Jurisdiction,** IV, 11; VI, 1, 14.

Privileges and immunities. See **Constitutional Law,** XII (4).

CLAIMS. See **Bankruptcy Act; Contracts,** 1–6; **Mails; Patents for Inventions,** 3, 4.

Supplies requisitioned under Lever Act. See **Jurisdiction,** IV, 12.

Choctaw Nation. See **Contracts,** 9, 10.

Assignment. Rev. Stats., § *3477,* forbidding assignment of claims against United States, inapplicable to transfer resulting from consolidation of railroad corporations under state law. *Seaboard Air Line Ry.* v. *United States*. 655

COMMERCE. See **Constitutional Law**, II; **Indians**, 1; **Interstate Commerce**; **Interstate Commerce Acts**; **Waters**.

COMMISSIONER OF PATENTS. See **Patents for Inventions**; **Trade-Marks**.

COMMISSION MERCHANTS. See **Interstate Commerce Acts**, I, 3.

COMMON LAW. See **Attachment**, 1; **Carriers**, 2, 5; **Telegraph Companies**, 1.

COMPROMISE. See **Procedure**, II, 2.

CONGRESS:
Powers. See **Constitutional Law**.
Statutes cited. See Table at front of volume.
Elections. See **Constitutional Law**, V.
Legislative history. See **Statutes**, 4.
Reports to. See *id.*, 5.

CONSOLIDATION:
Corporations; assignment of claims against United States. See **Claims**.
Original cases. See **Procedure**, II, 13.

CONSPIRACY. See **Anti-Trust Act**; **Criminal Law**, 2, 7.

CONSTITUTIONAL LAW:
I. Judicial Power, p. 715.
II. Commerce Clause, p. 715.
III. Contract Clause, p. 716.
IV. Federal Excise Taxes, p. 717.
V. Elections, p. 717.
VI. Indians, p. 718.
VII. Amendments; Art. V, p. 719.
VIII. Fourth Amendment, p. 719.
IX. Fifth Amendment, p. 719.
X. Eleventh Amendment, p. 720.
XI. Thirteenth Amendment, p. 720.

CONSTITUTIONAL LAW—*Continued.* PAGE

XII. Fourteenth Amendment:

(1) Notice and Hearing, p. 720.
(2) Liberty and Property; Police Power; Taxation, p. 721.
(3) Equal Protection of the Laws, p. 722.
(4) Privileges and Immunities, p. 723.

XIII. Seventeenth Amendment. See V, *infra*, 717.

XIV. Eighteenth Amendment, p. 723.

See **Jurisdiction; Waters.**

Missouri constitution; double taxation. See **Taxation,** II, 19.

New Mexico constitution; uniformity. See *id.*, 9.

I. Judicial Power.

1. *Legislative Policy; Equality in Taxation.* This court cannot revise state tax systems to produce more just distribution of burdens. *Dane* v. *Jackson*..... 589

2. *Legislative Declaration of Facts,* affording ground for rent regulation in District of Columbia, entitled to great respect. *Block* v. *Hirsh*..... 135
See *Marcus Brown Co.* v. *Feldman*..... 170

3. *Legislative Policy.* Where end of legislation legitimate and means reasonably related to it, wisdom of means is not for courts to pass upon. *Id.*

II. Commerce Clause.

1. *Excise Tax; Severability.* State tax on sale of gasoline, assuming it intended to include interstate and domestic transactions, not void *in toto* in application to distributer engaged in both, since enforcement as to interstate business may be enjoined. *Bowman* v. *Continental Oil Co* 642

2. *Id.* Gasoline imported from another State but used in conduct of business of distributer, loses interstate character and may be subjected to tax. *Id.*

3. *License Tax,* on distributing stations, invalid where interstate and intrastate business conducted indiscriminately at same stations. *Id.*

4. *Discriminating Tax; Foreign Corporations.* State tax on sale of automobiles, with reduction in amount where per-

CONSTITUTIONAL LAW—*Continued.* PAGE

centage of assets of manufacturer invested in bonds of State or other property there situate, discriminates against products of manufacturers of other States. *Bethlehem Motors Co.* v. *Flynt*. 421

5. *Domestic Corporations. Franchise Tax,* on capital stock and surplus employed in State, does not contravene commerce clause, even if value of franchise is derived partly from interstate business. *St. Louis-San Francisco Ry.* v. *Middlekamp* 226

6. *Street Railway Tax; Interstate Bridge.* Tax assessed by valuing tangible property and adding valuation of "all other property" and assigning proportion to taxing State, not regarded as burden on franchise to conduct traffic over bridge, upon ground that "other property" valued consisted solely of that franchise, where much of value of railway was due to exclusive rights and lucrative arrangements with other companies. *St. Louis &c. Ry.* v. *Hagerman* 314

7. *Missouri Long-and-short-haul Statute* sustained. *Missouri Pac. Ry.* v. *McGrew Coal Co.* 134

8. *Navigable Waters; State and Federal Regulation.* Authority of Congress to prohibit obstructions is not lost by omission to take action in previous cases. *Economy Light Co.* v. *United States*. 113

9. *Id. Northwest Territory. Ordinance of 1787,* establishing public rights of highway in navigable waters capable of bearing commerce among States, not repealable by a State. *Id.*

10. *Id.* Power of States to regulate is plenary within borders until Congress intervenes, but Congress may assume entire control, unhampered by previous acts of States. *Id.*

11. *Id. Future Use.* Congress may preserve river for future transportation, even though not at present used for interstate commerce and incapable of such use according to present methods. *Id.*

III. **Contract Clause.**

1. *Life Insurance Policies; Exemption from Debts.* State law exempting policy payable to estate of insured invalid as applied to debt under promissory note antedating law and to policies also antedating it though later than note. *Bank of Minden* v. *Clement*. 126

CONSTITUTIONAL LAW—*Continued.* PAGE

2. *Rent Regulation. New York Housing Acts*, requiring reasonable rents and denying recovery of possession except in certain cases, as applied to tenants holding over under expired lease, sustained, although lease executed before and expired after enactment and landlord before enactment had entered into new lease with third party. *Marcus Brown Co.* v. *Feldman*..... 170
See also *Block* v. *Hirsh*..... 135

IV. **Federal Excise Taxes.** See IX, 2, *infra;* **Intoxicating Liquors.**

1. *Uniformity, Art. I, § 8.* Only rule prescribed by Constitution respecting duties, imposts and excises is territorial uniformity. *La Belle Iron Works* v. *United States*..... 377

2. *Estate Taxes; Rights of States.* Tax on transfer of net estates of decedents, imposed by Act Sept. 8, 1916, *held* an indirect tax, not requiring apportionment, and not an interference with state regulation of descent and distribution. *New York Trust Co.* v. *Eisner*..... 345

3. *Id.* That tax may occasion inequalities in amounts received by beneficiaries does not affect validity. *Id.*

4. *Narcotic Drug Act.* State law regulating administration, sale and possession of narcotic drugs, which forbids physicians to supply drug addicts otherwise than through prescriptions, *held* not in conflict with federal act. *Whipple* v. *Martinson*..... 41

5. *Intoxicating Liquors.* May be taxed by Congress, notwithstanding production is prohibited, for moral end as well as to raise revenue. *United States* v. *Yuginovich*..... 450

V. **Elections.**

1. *Federal Corrupt Practices Act,* is unconstitutional as applied to primary election of candidates for Senate. *Newberry* v. *United States*..... 232

2. *Power of Congress* over elections of Senators and Representatives has its source in § 4, Art. I. *Id.*

3. *Id.* An indefinite, undefined power in Congress over such elections, not derived from Art. I, § 4, cannot be inferred from fact that offices were created by Constitution,

CONSTITUTIONAL LAW—*Continued.* PAGE

or by assuming Government must be free from control by States over matters affecting choice of its officers. *Id.*

4. *Elections Defined.* Elections, within § 4, Art. I, are those wherein Senators chosen by legislatures and Representatives by voters possessing qualifications requisite for electors of most numerous branch of state legislature. *Id.*

5. *Id. Seventeenth Amendment* does not require new meaning of election, which has same significance as when Constitution adopted,—final choice of officer by duly qualified electors. *Id.*

6. *Id. Primaries* are not elections for office, but merely methods for agreeing upon candidates offered for choice by electors. *Id.*

7. *Seventeenth Amendment* does not modify Art. I, § 4, the source of congressional power to regulate times, places and manner of holding elections; that section remains intact and applicable to election of Representatives and Senators. *Id.*

8. *Act of 1914*, temporarily providing for nomination and election of Senators, sheds no light on power to regulate primaries. *Id.*

9. *Seventeenth Amendment*, even if it gave power to regulate primaries, did not validate earlier penal statute (Federal Corrupt Practices Act); an after-acquired power cannot *ex proprio vigore* validate a statute void when enacted. *Id.*

10. *Id.* Act of 1914, § 2, if regarded as attempt to regulate nominations of Senators, based on Amendment, has no bearing on prosecution under Corrupt Practices Act, for conduct after section expired by own limitation. *Id.*

11. *Congressional Power; Reserved Power of States.* Power to control party senatorial primaries not within power to regulate manner of holding elections; nor is it necessary to effectuate power expressly granted; and its exercise would interfere with domestic affairs of States. *Id.*

VI. **Indians.** See **Indians**, 7, 8, 19.

1. *Power of Congress; Unallotted Tribal Lands.* Provisions of Omaha treaties and acts of Congress for assigning parcels in retained reservation in severalty, granting allotments in

CONSTITUTIONAL LAW—*Continued.* PAGE

trust and then in fee, and conveying unallotted residue to tribe in trust and then in fee, did not deprive Congress of right to make other disposition of unallotted reservation for benefit of Indians. *Chase, Jr.* v. *United States*..... 1
Gilpin v. *United States*..... 10

2. *Id. Vested Rights.* Right to obtain allotment not a vested right as respects this power of Congress. *Id.*

VII. **Amendments; Art. V.** See XIV, *infra.*

1. *Ratification; Time Limit.* Art. V implies that amendments be ratified within reasonable time after proposal. *Dillon* v. *Gloss*..... 368

2. *Id. Power of Congress* to fix reasonable time for ratification; seven-year period in resolution proposing Eighteenth Amendment *held* reasonable. *Id.*

VIII. **Fourth Amendment.**

Searches and Seizures. Amendment refers to governmental action only; United States may use against owner incriminating documents turned over to it by private individuals who procured them through wrongful search of owner's office. *Burdeau* v. *McDowell*..... 465

IX. **Fifth Amendment.**

1. *Self-incrimination.* Amendment protects from extorted confessions and examinations in court proceedings by compulsory methods; United States may use against owner incriminating documents turned over to it by private individuals who procured them through wrongful search of owner's office. *Burdeau* v. *McDowell*..... 465

2. *Taxation; Uniformity.* Fifth Amendment having no equal protection clause, the only rule respecting uniformity of duties, imposts and excises is territorial uniformity required by Art. I, § 8. *LaBelle Iron Works* v. *United States*..... 377

3. *Id. Due Process; Excess Profits Tax; Discrimination.* Unequal results to different corporations from basing "invested capital" upon actual costs to exclusion of higher estimated values, not arbitrary discrimination. *Id.*

4. *Railroad Grant; Vested Rights.* Right of grantee to land within indemnity limits in lieu of land lost within place

CONSTITUTIONAL LAW—*Continued.* PAGE

limits; when protected by due process clause. *United States* v. *Northern Pac. Ry.* 51

5. *Rent Regulation. Exigency* existing in District of Columbia clothed letting of buildings with public interest justifying regulation by police power of Congress, during emergency. *Block* v. *Hirsh.* 135

6. *Id. Contract Rights; Private Use.* District of Columbia Rents Act, allowing tenant to retain possession at rent stipulated in expired lease, is not unconstitutional restriction of landlord's right of contract or taking for private use. *Id.*

7. *Id. Temporary Regulation, held* justified; it did not become otherwise if reasonable rent fixed deprived owners of power of profiting by influx of people to Washington. *Id.*

8. *Id.* Preference given tenant in possession justified as incident of policy of legislation. *Id.*

9. *Id. Jury Trial.* Rents Act, being valid in its principal aspects, not to be held void because it might deprive landlords and tenants of trial by jury on right to possession. *Id.*

X. Eleventh Amendment.

Suit Against State; Admiralty. Admiralty suit *in personam* cannot be brought against State, without consent, by individual, whether citizen of State or not. *Ex parte State of New York, No. 1.* 490

XI. Thirteenth Amendment.

Involuntary Servitude; Landlord and Tenant. New York law penalizing apartment-house owners who fail to furnish heat, water, etc., does not impose involuntary servitude. *Marcus Brown Co.* v. *Feldman* 170

XII. Fourteenth Amendment.

(1) *Notice and Hearing.* See 19, *infra.*

1. *Foreign Attachment; Appearance; Special Bail.* Law conditioning defendant's right to appear and contest merits upon giving of special bail or surety's undertaking, *held* consistent with due process. *Ownbey* v. *Morgan.* 94

CONSTITUTIONAL LAW—*Continued.* PAGE

2. *Id. Individual Hardship.* Inability of defendant, through misfortune, to furnish security, immaterial. *Id.*

3. *Id. Non-residents; Presumption.* One who acquires property in State and departs, presumed to have consented to rule of foreign attachment, already in force. *Id.*

4. *Domestic Corporations; Franchise Tax.* Whether tax on capital stock and surplus employed in State is void in not providing hearing of right, before commission assessing tax, is open in suit to collect tax and cannot be relied on in District Court to restrain collection by corporation which had hearing and whose valuations were accepted by commission. *St. Louis-San Francisco Ry.* v. *Middlekamp* 226

(2) *Liberty and Property; Police Power; Taxation.* See IV, 2, 4, *supra;* 20, *infra.*

5. *Emergency Legislation; Rents.* New York Housing Acts do not exceed police power in requiring reasonable rents and denying right to possession except on certain grounds. *Marcus Brown Co.* v. *Feldman* 170

6. *Id.* As applied to tenant holding over under unexpired lease, such regulation does not violate landlord's constitutional rights, although lease executed before and expired after enactment and landlord before enactment had entered into new lease with third party. *Id.*

7. *Missouri Long-and-short-haul* statute sustained. *Missouri Pac. Ry.* v. *McGrew Coal Co.* 134

8. *Taxation; Legislative Policy.* This court cannot revise state tax systems to produce more just distribution of burdens. *Dane* v. *Jackson* 589

9. *Id. Equality.* Only flagrant and palpable inequality between burdens and benefits will render tax law invalid. *Id.*

10. *Id. Massachusetts; Income Tax; Intangible Personal Property.* Tax system which returns to plaintiff's town less income tax than he and other inhabitants pay, and distributes overplus to other towns which may use it for local purposes, not invalid. *Id.*

11. *Id. Public Use. Presumption* that money will be devoted to lawful public uses. *Id.*

CONSTITUTIONAL LAW—*Continued.* PAGE

12. *Transfer Tax. Remainder Interests,* which vested after tax law approved but before effective date, but which were subjected to it by state court upon theory that vesting occurred after effective date, not taxed in violation of Amendment. *Nickel* v. *Cole*. 222

13. *Excise on Gasoline,* as applied to local sale and use by distributer, *held* consistent with due process. *Bowman* v. *Continental Oil Co*. 642

14. *Drainage Assessment; Benefits.* That lands will receive no direct benefits is not *per se* enough to exempt them from assessment. *Miller & Lux* v. *Sacramento Drainage Dist*. 129

15. *Road Improvement Assessment.* Railroad property may not be burdened upon basis so different from that used in ascertaining contribution from individual owners as to produce inequality. *Kansas City So. Ry.* v. *Road Imp. Dist. No. 6*. 658

16. *Id. Federal Instrumentalities.* Taxability, for street improvement, of railroad right of way, constituting part of interstate system originally granted for development of Choctaw coal lands. *Choctaw, O. & G. R. R.* v. *Mackey*. . . . 531

17. *Id. Identification of Property.* Designation on map prepared by city engineer sufficient; assessment not invalidated by removal of map and possession by bond purchasers, the railroad not having been misled and having had knowledge of proceedings. *Id.*

18. *Narcotic Drugs.* State may regulate administration, sale and possession. *Whipple* v. *Martinson*. 41

(3) *Equal Protection of the Laws.* See IX, 2; XII, 7, 15, *supra.*

19. *Foreign Attachment; Non-resident Individuals and Foreign Corporations.* Distinction in state law requiring former to furnish special security before appearing and defending but allowing latter to defend on security of attachment lien, not a denial to individuals of equal protection. *Ownbey* v. *Morgan*. 94

20. *New York Housing Acts; Classification.* No discrimination in not including cities of less than specified population, or buildings occupied otherwise than for dwelling purposes or in course of construction. *Marcus Brown Co.* v. *Feldman* 170

CONSTITUTIONAL LAW—*Continued.* PAGE

21. *Domestic Corporations; Franchise Tax.* Corporation whose valuations accepted by assessing commission, cannot complain it was taxed disproportionately as compared with other railroads, the commission not having acted fraudulently. *St. Louis-San Francisco Ry.* v. *Middlekamp*..... 226

22. *Id. Par Value.* Where law subjects foreign corporations with stock having no stated par value to tax, it does not discriminate against domestic corporations whose stock has stated par value. *Id.*

23. *Foreign Corporations; License Tax.* Tax on business of selling automobiles in State, with reduction in amount where percentage of assets of manufacturer invested in bonds of State or in property there situate, discriminates against foreign corporations doing intrastate business. *Bethlelem Motors Co.* v. *Flynt*..... 421

24. *Excise Tax on Gasoline,* as applied to local sale and use by distributer, consistent with equal protection clause. *Bowman* v. *Continental Oil Co.*..... 642

25. *Taxation; Local Improvements.* Arkansas statute authorising local assessments *held* a denial of equal protection. *Kansas City So. Ry.* v. *Road Imp. Dist. No. 6*..... 658

(4) *Privileges and Immunities.*

26. *Federal Origin.* Privileges and immunities are such as owe their existence to Federal Government, its national character, its Constitution, or its laws. *Ownbey* v. *Morgan.* 94

XIII. **Seventeenth Amendment.** See V, *supra.*

XIV. **Eighteenth Amendment.** See IV, 5, *supra;* **Intoxicating Liquors.**

1. *Ratification; Time Limit.* Power of Congress to fix reasonable time for ratification; seven years *held* reasonable. *Dillon* v. *Gloss*..... 368

2. *Id. Effective Date.* Became part of Constitution Jan. 16, 1919, when ratification by States consummated, not on date when ratification proclaimed by Secretary of State. *Id.*

3. *Id. Prohibition Act.* As Amendment by its terms was to go into effect one year after being ratified, Prohibition Act was in force Jan. 16, 1920. *Id.*

CONSTRUCTION. See **Anti-Trust Act; Attachment; Bankruptcy Act; Carriers; Chinese Exclusion Acts; Claims; Constitutional Law; Contracts; Criminal Law; Customs Law; Employer and Employee; Indians; Insurance; Interstate Commerce Acts; Intoxicating Liquors; Judgments,** 3–9; **Jurisdiction; Landlord and Tenant; Mails; Mines and Mining; Municipal Corporations,** 1–3; **Narcotic Drugs; National Banks; Patents for Inventions; Pleading; Procedure; Public Lands; Statutes; Taxation; Telegraph Companies; Trade-Marks; Waters.** PAGE

Bill of lading. See **Carriers,** 7, 8; **Interstate Commerce Acts,** I, 1, 2.

Charterparty. See **Admiralty,** 9–14.

CONSTRUCTIVE NOTICE. See **Indians,** 18, 19.

CONTRACTS:

Impairment of. See **Constitutional Law,** III.

Liberty of. See *id.*, IX, 6, 7.

Transportation. See **Carriers; Interstate Commerce Acts,** I, III.

Charterparty. See **Admiralty,** 9–14.

Insurance. See **Insurance.**

License; rights in streets. See **Municipal Corporations,** 1–3.

Railroad land grants. See **Public Lands,** II.

Restraint of trade. See **Anti-Trust Act.**

Federal control; telegraph lines. See **Telegraph Companies.**

Telegrams, transmission. See **Interstate Commerce Acts,** II.

1. *Government Works; Dredging.* Right to recover cost of excavating material not covered by contract. Provisions making decision of officer in charge as to quantity and quality of work final, requiring contractors to observe his instructions, and denying claims for work not agreed to in writing, *held* inapplicable. *United States* v. *Smith*. 11

2. *Id. Delay.* Contractors *held* entitled to recover for loss due to delays of engineer in locating places of work. *Id.*

3. *Id. Appropriations; Rivers and Harbors.* Acts appropriating for completing improvements, permitting use of fund in prosecution of work if insufficient to complete it.

CONTRACTS—*Continued.* PAGE

do not authorize Secretary of War to contract for more than amounts appropriated. *Sutton* v. *United States*..... 575

4. *Id.* Appropriation for preservation of existing works and prosecution of work previously authorized, not applicable to pay for work theretofore done under and in excess of prior appropriation; when so misapplied amount paid is deductible from balance owing under another contract. *Id.*

5. *Id.* *Implied Contract.* Where erroneous estimates of government inspectors result in doing of work in excess of appropriation, and Government used the excavation, no contract to pay for excess can be implied. *Id.*

6. *Id.* *Cost of Inspection,* may not be deducted from appropriation at expense of contractor, where excess work done through mistake of Government. *Id.*

7. *Mail Transportation; Adjustment of Compensation.* Where railroad discontinued important train service causing diversion, readjustment by Department of compensation under Act 1912, passed after date of contract, did not violate contract although it diminished compensation, in part retroactively. *Missouri, Kans. & Tex. Ry.* v. *United States*..... 610

8. *Id.* *Weighing.* Act 1912 allows readjustment after weighing of diverted mails only; proviso that they must equal 10% of average daily weight on any of routes affected, *construed.* *Id.*

9. *Choctaw Nation; Services; Agency; Payment.* Obligations of Choctaw Nation to delegates appointed to press money claims against United States, *held* to be to delegates individually and not as a body, and that two existing delegates, in collecting and disbursing money appropriated for services, were agents of the Nation, so that its payment to them did not discharge obligation of Nation to heirs of former delegate who rendered part of service. *Garland's Heirs* v. *Choctaw Nation*..... 439

10. *Id.* *Quantum Meruit.* While, under act authorising suit, right of such heirs to recover for services of ancestor must be determined not upon his contract but upon principle of *quantum meruit,* petition alleging valuable services should not be rejected upon ground that it asserted and relied upon contract. *Id.*

CORPORATIONS. See **Banks and Banking; Municipal Corporations; National Banks; Taxation,** I, 6–8; II, 11–27. PAGE
State agency. See **Parties,** 1.
Railroads; federal control; suits against. See **Carriers,** 2–6.
Telegraph lines; federal control. See **Telegraph Companies.**
Consolidation; assignment of claims against United States. See **Claims.**
Foreign attachment. See **Attachment,** 4.

CORRUPT PRACTICES ACT. See **Constitutional Law,** V.

COSTS. See **Procedure,** II, 3; VI, 1.

COURT OF CLAIMS. See **Claims; Contracts,** 9, 10; **Jurisdiction,** VI, 9.

COURTS. See **Evidence; Judgments; Judicial Notice; Jurisdiction; Procedure; Statutes.**
Effect of administrative decisions. See **Indians,** 5, 6, 8–10, 14–19; **Interstate Commerce Acts,** III; **Mails; Public Lands,** I; II, 6, 7, 11; **Trade-Marks; Waters,** 10.

CREEK INDIANS. See **Indians,** 11–13, 16–19.

CRIMINAL CODE. See **Criminal Law,** 1, 7.

CRIMINAL LAW:
Unreasonable search and seizure. See **Constitutional Law,** VIII.
Self-incrimination. See *id.,* IX, 1.
Construction of penal statutes. See **Statutes,** 1–3.
Penalties; failure to furnish tenants necessary service. See **Constitutional Law,** XI.

1. *Bribery; Federal Officers and Employees; Crim. Code,* § 39. Baggage porter employed in station operated by United States during federal control not a person acting on behalf of United States in an official function. *Krichman* v. *United States*. 363

2. *Elections; Federal Corrupt Practices Act; Conspiracy.* In criminal prosecution, act *held* invalid as applied to primary

CRIMINAL LAW—*Continued.* PAGE

election of candidates for Senate. *Newberry* v. *United States*. 232

3. *Homicide; Self-defense; Retreat.* Right of man to stand ground when attacked with deadly weapon depends upon reasonable belief of immediate danger, and not upon detached test whether man of reasonable prudence might not think it possible to fly with safety or to disable his assailant rather than kill him. *Brown* v. *United States*. 335

4. *Id.* So *held* of homicide committed on post-office site by one who was there in discharge of duty. *Id.*

5. *Id. Evidence; Self-defense; Jury.* Where defendant shot deceased several times and again when deceased had fallen, evidence of self-defense was for jury; and, if they disbelieve defendant's testimony that last shot was accident, they might still acquit him if, though intentional, it followed close upon others in heat of conflict. *Id.*

6. *Indian Agents; Trade; Personal Gain.* Rev. Stats., § 2078, prohibiting interest in trade, except on behalf of United States, and providing penalty and removal from office, includes transactions involving property in respect of which United States has no interest or control. *United States* v. *Hutto*. 524, 530

7. *Id. Conspiracy.* What is "offense against United States," within Crim. Code, § 37? *Id.*

8. *Intoxicating Liquors; Distillers; Defrauding of Tax.* Sections 3257, 3279, 3281 and 3282, Rev. Stats., *held* repealed by National Prohibition Act, so far as concerns production for beverage purposes. *United States* v. *Yuginovich* 450

CUSTOM OF LONDON. See **Attachment**, 1.

CUSTOMS LAW:

Free List; Act 1913. Mixture of acids to prevent injury to containers used for transportation, resulting in mixture not intended or adapted for commercial use, does not take merchandise out of free list and render it dutiable under par. 5. *United States* v. *Ætna Explosives Co* 402

DAMAGES:

Reparation orders. See **Interstate Commerce Acts**, III.

DECREES. See **Judgments; Procedure, VI.**

DEEDS:
Indian leases, filing. See **Indians, 18, 19.**

DELAWARE. See **Attachment.**

DELIVERY. See **Carriers, 7, 8; Interstate Commerce Acts, I, 1, 2; II; Telegraph Companies.**

DEPOSITORS:
Rights of. See **Banks and Banking.**

DESCENT AND DISTRIBUTION. See **Indians, 7–19; Taxation, I, 1–5; II, 5.**

DIRECTOR GENERAL OF RAILROADS. See **Carriers, 2–6; Interstate Commerce Acts, III, 4.**

DISTRICT OF COLUMBIA. See **Jurisdiction, IV (5); Landlord and Tenant, 1–4; Municipal Corporations.**

DISTRICT COURT. See **Jurisdiction, II; III; IV, 6–13; VI.**

DIVERSE CITIZENSHIP. See **Jurisdiction, IV, 11; VI, 14.**

DIVIDENDS. See **Taxation, I, 6–8.**

DOCUMENTS. See **Constitutional Law, VIII; IX, 1.**

DRAINAGE. See **Taxation, II, 28.**

DRUGS. See **Narcotic Drugs.**

DUE PROCESS. See **Constitutional Law.**

DUTIES. See **Constitutional Law, IV; Customs Law.**

EIGHTEENTH AMENDMENT. See **Constitutional Law, XIV.**

ELECTIONS. See **Constitutional Law, V.**

ELEVENTH AMENDMENT. See **Constitutional Law, X.** PAGE

EMERGENCY LEGISLATION. See **Constitutional Law,** I, 2; III, 2; IX, 5–9; XII, 5, 6, 20.

EMPLOYER AND EMPLOYEE. See **Municipal Corporations,** 5.
Railroads; federal control; bribery. See **Criminal Law,** 1.

1. *Railroads; Interstate Commerce; Workmen's Compensation Laws.* Employees whose duties concerned both interstate and intrastate trains, *held* employed in interstate commerce. *Phila. & Read. Ry.* v. *Di Donato*..... 327
Phila. & Read. Ry. v. *Polk*..... 332

2. *Id. Presumption.* Special relation to intrastate commerce which would have rendered employment intrastate not presumed; must be proven by actor in proceeding. *Phila. & Read. Ry.* v. *Polk*..... 332

EMPLOYERS' LIABILITY ACT. See **Employer and Employee.**

EQUAL PROTECTION OF THE LAWS. See **Constitutional Law,** XII (3).

EQUITY:
Original cases; decree. See **Procedure,** II, 3, 4.
Id. Special master. See *id.*, II, 8.
Special master; appointment by District Court to ascertain excess rates collected pending appeal; enforcement by city of rights of consumers. See **Jurisdiction,** VI, 15–17.

1. *Injunction; State Banks; Injurious Practices of Federal Reserve Bank.* Equity of state banks to enjoin unwarranted accumulation and presentation of checks in pursuance of scheme to compel them to become members of Federal System. *American Bank & Trust Co.* v. *Federal Reserve Bank*.. 350

2. *Id. Public Nuisance; Suit Between States.* Right of New York, in interest of public health and property, to enjoin New Jersey project for discharging sewage into New York Bay. *New York* v. *New Jersey*..... 296

3. *Id. Intervention; United States; Stipulation.* If conditions of stipulation between United States and sewerage

EQUITY—*Continued.* PAGE

commissioners, for modification of method of treating sewage, and allowing Government inspection, were realized and maintained, there could be no occasion for injunction. *Id.*

4. *Id. Threatened Injury.* Before this court will exercise jurisdiction, threatened injury must be of serious magnitude and clearly established. *Id.*

ERROR AND APPEAL. See **Jurisdiction; Procedure.**

ESTATES OF DECEDENTS. See **Indians,** 7–19; **Taxation,** I, 1–5; II, 5.

EVIDENCE. See **Judicial Notice; Procedure,** VI, 4.
Unreasonable search and seizure. See **Constitutional Law,** VIII.
Self-incrimination. See **Constitutional Law,** IX, 1.
Original cases; supplemental proofs. See **Procedure,** II, 13.
Presumption. See **Attachment,** 3; **Mines and Mining,** 2–4; **Municipal Corporations,** 1, 2; **Taxation,** II, 4.
Birth. See **Indians,** 12, 13.
Constructive notice; leases. See *id.*, 18, 19.
Navigability; law or fact. See **Waters,** 6–10.
Restraint of trade. See **Anti-Trust Act,** 2.
Self-defense; instructions. See **Criminal Law,** 3–5.
Indemnity lands; proof of deficiency. See **Public Lands,** II, 6–11.
Res judicata; examination of evidence in determining. See **Judgments,** 4.

1. *Vessels; Proof of Foreign Requisition.* Intervention of British Ambassador as *amicus curiæ.* *Texas Co.* v. *Hogarth Shipping Co.* 619

2. *Presumption.* Ordinance rates presumptively valid, until proven otherwise. *Ex parte Lincoln Gas Co* 512

3. *Employment in Interstate Commerce,* when special relation which would have rendered employment intrastate not presumed; must be proven by actor in proceeding. *Phila. & Read. Ry.* v. *Di Donato* 327
Phila. & Read. Ry. v. *Polk* 332

4. *Carriers; Agency; Service of Process.* Return showing service in action on reparation order on person described as carrier's freight agent, not impeached by fact that Govern-

EVIDENCE—*Continued.* PAGE

ment was in control at time, in absence of proof that he was employed by Director General, and not also as agent of carrier. *Vicksburg &c. Ry.* v. *Anderson-Tully Co.* 408

5. *Original Suits; Threatened Injury.* Before this court will control conduct of one State at suit of another, threatened injury must be of serious magnitude and clearly established. *New York* v. *New Jersey*. 296

6. *Id. Public Nuisance.* Evidence *held* not to prove that proposed discharge of sewage into New York Bay would cause damage to persons or property, additional to that attributable to existing discharge from New York City; or that, if treated as prescribed in stipulation for modification of method, additional sewage would seriously add to existing pollution. *Id.*

EXCEPTIONS. See **Procedure**, VI, 3.

EXCESS PROFITS. See **Taxation**, I, 6–8.

EXCHANGE. See **Banks and Banking.**

EXCISE TAX. See **Constitutional Law**, IV; XII, 18; **Taxation**, II, 6–9.

EXECUTIVE OFFICERS. See **Carriers**, 2–6; **Contracts**, 2, 3; **Constitutional Law**, XIV, 2; **Indians**, 1, 2, 11; **Public Lands**, II, 8; **Telegraph Companies**, 2, 3.
Administrative decisions. See **Indians**, 5, 6, 8–10, 14–19; **Interstate Commerce Acts**, III; **Mails**; **Public Lands**, I; II, 6, 7, 11; **Trade-Marks**; **Waters**, 10.
Bribery. See **Criminal Law**, 1.
Reports to Congress. See **Statutes**, 5.
Suit against State. See **Jurisdiction**, VI, 1–5.

EXECUTORS AND ADMINISTRATORS. See **Taxation**, I, 1–5; II, 5.

FACTS. See **Evidence**; **Judicial Notice**; **Procedure**, VI, 3, 4.
Date of birth. See **Indians**, 12, 13.
Navigability; law or fact. See **Waters**, 6–10.
Administrative decisions. See **Indians**, 5, 6, 8–10, 14–19; **Interstate Commerce Acts**, III; **Mails**; **Public Lands**, I; II, 6, 7, 11; **Trade-Marks**; **Waters**, 10.

FEDERAL CONTROL:
Railroads. See **Carriers, 1–6; Interstate Commerce Acts,** III, 3, 4; **Taxation,** II, 18.
Telegraph lines. See **Telegraph Companies.**

FEDERAL CORRUPT PRACTICES ACT. See **Constitutional Law,** V.

FEDERAL EMPLOYERS' LIABILITY ACT. See **Interstate Commerce.**

FEDERAL QUESTION. See **Jurisdiction,** IV, 15–18; VI, 12, 13.

FEDERAL RESERVE BANKS. See **Banks and Banking; Jurisdiction,** VI, 13, 14.

FIFTH AMENDMENT. See **Constitutional Law,** IX.

FINAL JUDGMENT. See **Jurisdiction,** IV, 10, 14; V.
Original cases. See **Procedure,** II, 3.

FOREIGN ATTACHMENT. See **Attachment.**

FOURTEENTH AMENDMENT. See **Constitutional Law,** XII.

FOURTH AMENDMENT. See **Constitutional Law,** VIII.

FRANCHISES. See **Municipal Corporations,** 1–3; **Taxation,** II, 13–21.

FRAUD.
Assessment. See **Taxation,** II, 15.

GAS COMPANIES.
Rates; refund. See **Jurisdiction,** VI, 15–17.

GAS LEASES. See **Indians,** 16–19.

HEARING. See **Constitutional Law,** XII (i).

HOMESTEADS. See **Indians,** 11–13; **Public Lands,** I; II, 5.

HOMICIDE. See **Criminal Law,** 3–5.

HUSBAND AND WIFE. See **Indians**, 14, 15. PAGE

ILLINOIS. See **Waters**, 2, 8.

IMMIGRATION. See **Chinese Exclusion Acts.**

IMPORTS. See **Customs Law.**

INCOME TAX. See **Taxation**, I, 1–8; II, 1–4.

INDIANS.

Choctaw Nation. See **Contracts**, 9, 10.

Choctaw coal lands; railroad right of way. See **Taxation**, II, 25–27.

1. *Agents; Trade; Personal Gain.* Rev. Stats., § 2078, prohibiting interest in trade, except on behalf of United States, and providing pecuniary penalty and removal from office, includes transactions involving property in respect of which United States has no interest or control. *United States* v. *Hutto*. 524, 530

2. *Id. Criminal Offense.* Section defines offense against United States, within § 37 Crim. Code. *Id.*

3. *Omaha Tribe; Power of Congress; Unallotted Tribal Land.* Provisions of Treaties of 1854 and 1865, for assigning parcels in retained reservation in severalty, and of Acts of 1882 and 1893, for granting allotments in trust and then in fee, and for conveying unallotted residue to tribe in trust and then in fee, did not deprive Congress of right to make other disposition of unallotted reservation for benefit of Indians. *Chase, Jr.* v. *United States* 1
Gilpin v. *United States*. 10

4. *Id. Vested Rights.* Right to obtain allotment not a vested right as respects this power of Congress. *Id.*

5. *Id. Sale by Secretary of Interior.* Act of 1912 authorizing sale of unallotted lands of reservation in parcels, superseded earlier provisions for allotting them. *Id.*

6. *Id. Secretary's Discretion.* Refusal to allow further allotments because of Act of 1912, is an exercise of discretion to reserve land for disposition under it. *Id.*

7. *Trust and Restricted Allotments.* Power to ensure that land allotted in severalty shall enure to benefit of allottee

INDIANS—*Continued.* PAGE

and heirs while title restricted, where allotment patented in fee subject to restriction on alienation as well as where "trust patent" issued and fee remains with United States. *United States* v. *Bowling*. 484

8. *Id. Heirship; Determination by Secretary of Interior.* In either case, Congress may authorize Secretary to determine heirs of deceased allottee and make decision conclusive. *Id.*

9. *Id.* Power of Secretary if, as granted by Act of 1910, it was intended to be confined to trust allotments, was extended to allotments in fee subject to restriction on alienation by Act of 1914, appropriating for determining heirs. *Id.*

10. *Id. Executive Practice.* So *held* in view of practice whereby heirs holding restricted fees determined in numerous cases, communication thereof through official reports to Congress, and provisos declaring appropriations inapplicable to certain tribes whose allotments are of restricted fee class. *Id.*

11. *Alienation; Homestead; Rights of Heirs.* Allotment of half-blood Creek, who died intestate leaving surviving issue born since Mar. 4, 1906, remains inalienable under Act of 1908 during lifetime of such issue, until April 26, 1931, if Secretary of Interior has not removed restriction; deed by heirs under such circumstances is void. *Privett* v. *United States*. 201

12. *Id. Finding; Date of Birth.* Finding by lower courts that surviving son of Creek allottee was born since Mar. 4, 1906, sustained by evidence. *Id.*

13. *Id. State Judgment. United States* not concluded by finding of date of birth and judgment upholding conveyances, in prior suit in state courts between heirs and one claiming under conveyances, to which suit United States was not a party. *Id.*

14. *Restricted Lands; Wills.* Transmission by will governed by Act June 25, 1910, as amended, and regulations by Secretary of Interior. *Blanset* v. *Cardin* 319

15. *Id. Quapaws; Rights of Husband. Okla. Code, § 8341,* prohibiting married woman devising more than two-thirds of property away from husband, does not affect will of

INDIANS—*Continued.* PAGE

Quapaw woman approved by Secretary after her death, so devising restricted land. *Id.*

16. *Leases; Approval; Secretary of Interior.* Authority, under § 2 of Act 1908, to approve oil and gas lease by full-blood Creek allottee, not taken away, under § 9, by death of allottee. *Anchor Oil Co.* v. *Gray* 519

17. *Id. Rights of Heirs.* As respects rights of heirs and those claiming under them with notice of outstanding lease, approval relates back and takes effect as of execution of lease by parties named therein. *Id.*

18. *Id. Filing; Notice.* Under Act 1907, lodging of lease with Indian Agent at Muskogee, for transmission to Secretary, is constructive notice to persons who, after death of lessor, took another lease from lessor's heirs. *Id.*

19. *Id. Oklahoma Enabling Act,* and admission of State, did not suspend provision of Act 1907 making such filing constructive notice. *Id.*

INFRINGEMENT. See **Patents for Inventions.**

INHERITANCE TAX. See **Taxation,** I, 1–5; II, 5.

INJUNCTION. See **Equity.**

Bonds; appeal. See **Jurisdiction,** VI, 15–17.

INSTRUCTIONS. See **Criminal Law,** 3–5.

INSURANCE.

1. *Life Policy; Payable to Estate; Rights of Creditors.* Policy payable to executors, administrators or assigns of insured is subject to claims of creditors. *Bank of Minden* v. *Clement* .. 126

2. *Id. Exemption from Execution.* Law exempting such policy from debts is invalid as applied to debt under promissory note antedating law and to policies also antedating it though later than note. *Id.*

3. *Id. Bankruptcy; Claim of Trustee; Surrender Value.* Company which paid policy to beneficiary, after death of insured and without notice of pending bankruptcy or claim made by trustee, not liable for surrender value under § 70a, Bankruptcy Act. *Frederick* v. *Fidelity Insurance Co* 395

INTERIOR, SECRETARY OF. See **Indians**, 5, 6, 8–11, 14–19; **Public Lands**, II, 6–8, 11. PAGE

INTERNATIONAL LAW. See **Admiralty; Boundaries.**

INTERSTATE COMMERCE. See **Constitutional Law**, II; **Interstate Commerce Acts; Waters**, 1–5.

1. *Employment in; Workmen's Compensation Laws.* Employees whose duties concerned both interstate and intrastate trains *held* employed in interstate commerce. *Phila. & Read. Ry.* v. *Di Donato* 327
Phila. & Read. Ry. v. *Polk* 332

2. *Id. Presumption.* Special relation to intrastate commerce which would have rendered employment intrastate not presumed; must be proven by actor in proceeding. *Phila. & Read. Ry.* v. *Polk* 332

INTERSTATE COMMERCE ACTS. See **Anti-Trust Act; Interstate Commerce; Waters**, 1–5.
Uniform bill of lading; delivery. See **Carriers**, 7, 8; *infra*, I, 1, 2.

I. Shipper and Carrier.

1. *Uniform Bill of Lading; Delivery and Receipt; Agents.* Provision placing goods at owner's risk where there is no regularly appointed agent at point of delivery or receipt, *construed.* *Yazoo & Miss. Valley R. R.* v. *Nichols & Co.* ... 540

2. *Id. Spur Tracks.* Where goods loaded into outgoing car on public spur connecting with main track near station having such agent and bill of lading issued, they were at carrier's risk while car remained there waiting to be attached to train. *Id.*

3. *Rates; Mistake.* Commission merchant who received shipment and paid charges demanded, which were less than lawful rates, *held* liable for difference irrespective of contract and as matter of law. *New York Cent. R. R.* v. *York & Whitney Co.* 406

4. *Id. Individual and Party: Soldiers.* In absence of agreement for reduced rates under § 22, United States must pay rates applicable generally for like transportation, less lawful land-grant deductions. *Atchison, Topeka & Santa Fe Ry.* v. *United States* 205

INTERSTATE COMMERCE ACTS—*Continued.* PAGE

5. *Id. Through Rates; Tariffs.* Through transportation of a party cannot be charged less than individual rate by combining party rate applicable to part of distance with individual rate applicable to remainder. *Id.*

6. *Id.* Through individual rate *held* "regular tariff rate," within contract for transportation of soldiers. *Id.*

II. **Telegraph Companies.**

1. *Cable Messages; Repeated and Unrepeated; Alternative Rates; Tariffs; Limitation of Liability.* Where unrepeated message sent over lines in other countries and received by company at Havre, and sent to New Orleans, an error being introduced on land lines here resulting in loss, *held*, that whatever legal incidents of transmission over foreign lines, company in carrying over own lines from Havre was governed by act. *Western Union Tel. Co.* v. *Esteve Bros. & Co.* 566

2. *Id. Lawful Rates; Preference; Notice.* Sender bound as matter of law by tariff limiting liability, without regard to knowledge; departure from lawful rate creates preference. *Id.*

3. *Id. Quære:* Whether rule that carriers of goods, to limit liability for negligence, must offer alternative rate attended by full liability, applies to telegraph companies? *Id.*

4. *Id.* Where lower rate offered with limited liability for unrepeated messages, and higher rate for repeated messages with higher but still limited liability, senders of unrepeated message at lower rate cannot escape limitation upon ground that liability under higher was also limited. *Id.*

III. **Powers and Proceedings of Commission.**

1. *Reparation Orders; Enforcement; Venue.* Provision allowing action in any district through which road runs, applies to district where defendant owns no railroad but has its cars hauled by, and over line of, another carrier for mileage compensation to and from a point therein where both share expenses of freight and ticket offices. *Vicksburg &c. Ry.* v. *Anderson-Tully Co* 408

2. *Id.* This provision not repealed by legislation abolishing Commerce Court. *Id.*

3. *Id. Federal Control Act.* Under § 10, action to enforce order based on shipment which moved before Government

INTERSTATE COMMERCE ACTS—*Continued.* PAGE

control could be brought against carrier while such control existed. *Id.*

4. *Id. Service of Process.* Return showing service on person described as carrier's freight agent, not impeached by fact that Government was in control at the time, in absence of proof that he was employed by Director General, and not also as agent of carrier. *Id.*

5. *Id. Petition; Sufficiency.* Petition *held* sufficient under § 16 of Commerce Act, prescribing that it set forth causes for which damages claimed and order of Commission. *Id.*

6. *Id. Relief Under § 4.* Pendency of application for relief did not suspend Commission's power to award reparation for past exactions of unreasonable rate which carrier itself corrected by amending tariffs after petition for reparation filed. *Id.*

INTERSTATE COMMERCE COMMISSION. See **Interstate Commerce Acts,** III.

INTERVENTION. See **Parties,** 5; **Procedure,** II, 1, 12.

INTOXICATING LIQUORS. See **Statutes,** 2, 3.

Eighteenth Amendment; ratification. See **Constitutional Law,** XIV.

1. *National Prohibition Act; Effective Date.* Sections 3 and 26, Tit. II, were in force on Jan. 16, 1920. *Dillon* v. *Gloss.* 368

2. *Federal Taxation.* Congress may tax intoxicants, notwithstanding production is prohibited. *United States* v. *Yuginovich* 450

3. *Revenue Laws; Distillers; Defrauding United States of Tax.* Sections 3257, 3279, 3281 and 3282, Revised Statutes, *held* repealed by National Prohibition Act, so far as concerns production for beverage purposes. *Id.*

INVOLUNTARY SERVITUDE. See **Constitutional Law,** XI.

JUDGMENTS. See **Parties,** 4; **Procedure,** VI.

Administrative decisions. See **Indians,** 5, 6, 8–10, 14–19; **Interstate Commerce Acts,** III; **Mails; Public Lands,** I; II, 6, 7, 11; **Trade-Marks; Waters,** 10.

JUDGMENTS—*Continued.* PAGE

Final. See **Jurisdiction**, IV, 10, 14; V.
Moot case. See **Procedure**, VI, 1.
Right to re-open case after term. See **Jurisdiction**, V.
Railroads; federal control. See **Carriers**, 2–6.

1. *Original Cases; State Boundary. Final Decree*, confirming report of commissioners, establishing boundary, and allowing expenses and costs. *Arkansas* v. *Mississippi* 28

2. *Id. Interlocutory Decree*, declaring state boundary, setting case for hearing as to more definite location, directing as to evidence taken and taking of further evidence, and appointing commissioner. *Oklahoma* v. *Texas*..... 608

3. *Res Judicata; State Boundary.* In suit between Oklahoma and Texas to establish boundary along Red River, as fixed by Treaty of 1819, former decree (*United States* v. *Texas*, 162 U. S. 1), *held* conclusive. *Oklahoma* v. *Texas* 70

4. *Id. Scope of Former Decree*, tested by examination of record, including pleadings, evidence, contentions of parties, and findings and opinion of court, there being no occasion for resorting to extrinsic evidense. *Id.*

5. *Id.* Former decree not only concluded parties as to part of boundary bordering upon Greer County, but settled construction of treaty as to entire course of river where it marks boundary between territory then of United States and Texas. *Id.*

6. *Id. Navigability; United States.* State decision holding river non-navigable in natural condition does not bind United States if it was not a party to suit. *Economy Light Co.* v. *United States*..... 113

7. *Id. Date of Birth.* In suit to set aside deeds made by Indian heirs in contravention of restriction on alienation, United States not concluded by finding of date of birth of surviving issue and judgment upholding conveyances, in prior suit in state court between heirs and one claiming under conveyances, to which United States was not a party. *Privett* v. *United States*..... 201

8. *Mandate; Proceedings on.* Jurisdiction of District Court, upon affirmance with modifications of decree dismissing bill, to ascertain excess rates paid by gas consumers, pending

JUDGMENTS—*Continued.* PAGE

litigation, and to require repayment under injunction bond. *Ex parte Lincoln Gas Co.* 512

9. *Id.* *New Suit Without Prejudice.* Dismissal without prejudice to new suit under changed conditions, does not restrict jurisdiction as to overcharges made before decree entered. *Id.*

JUDICIAL NOTICE. See **Public Lands**, II, 10.

1. *Amendment to Constitution.* Time of ratification judicially noticed. *Dillon* v. *Gloss* 368

2. *Public Emergency.* Legislative declaration of facts affording ground for rent regulation in District of Columbia entitled to great respect and confirmed by common knowledge. *Block* v. *Hirsh* 135
See *Marcus Brown Co.* v. *Feldman* 170

JURISDICTION:

I. Generally, p. 741.

II. Jurisdiction of Federal Courts Generally, p. 741.

III. Jurisdiction Over the Person, p. 741.

IV. Jurisdiction of this Court:

(1) Generally, p. 741.
(2) Original, p. 742.
(3) Over Circuit Court of Appeals, p. 742.
(4) Over District Court, p. 743.
(5) Over Courts of District of Columbia, p. 743.
(6) Over State Courts, p. 743.

V. Jurisdiction of Circuit Court of Appeals, p. 744.

VI. Jurisdiction of District Court, p. 744.

VII. Jurisdiction of State Courts, p. 746.

See **Constitutional Law**; **Equity**; **Procedure**; **Waters**.
Administrative decisions. See **Indians**, 5, 6, 8–10, 14–19; **Interstate Commerce Acts**, III; **Mails**; **Public Lands**, I; II, 6, 7, 11; **Trade-Marks**; **Waters**, 10.
Court of Claims. See VI, 9, *infra*.
Over foreign corporations. See **Taxation**, II, 11, 12, 16.
Certiorari. See IV, 8, 14, *infra*.
Federal question. See IV, 15–18; VI, 12, 13, *infra*.

JURISDICTION—*Continued.* PAGE

Final judgment. See IV, 10, 14; V, *infra;* **Procedure,** II, 3.
Local law. See IV, 19, 20, *infra.*

I. **Generally.**

1. *Legislative Policy; Review of Facts.* Declaration of facts affording ground for rent regulation in District of Columbia entitled to great respect. *Block* v. *Hirsh* 135
See *Marcus Brown Co.* v. *Feldman*..... 170

2. *Id.* Where end of legislation legitimate and means reasonably related to it, wisdom of means is not for courts to pass upon. *Id.*

3. *Id. State Tax Systems.* Court cannot revise to produce more just distribution of burdens. *Dane* v. *Jackson* 589

4. *Introducing New Defense.* Whether defendant, upon reversal of judgment in his favor, may introduce new defense available on first trial not a question of jurisdiction but of practice. *Chase, Jr.* v. *United States* 1

II. **Jurisdiction of Federal Courts Generally.**

1. *Suit Against State; Admiralty.* Under Eleventh Amendment, admiralty suit *in personam* cannot be brought against State, without consent, by individual, whether citizen of State or not. *Ex parte State of New York, No. 1* 490

2. *Suggestion by Attorney General.* When sufficient basis for determining jurisdiction. *Ex parte State of New York, No. 2* 503

III. **Jurisdiction Over the Person.**

States and state property. See VI, *infra.*

Railroad Agent; Federal Control. In action to enforce reparation order under Commerce Act, return showing service on person described as carrier's freight agent not impeached by fact that Government was in control at time. *Vicksburg &c. Ry.* v. *Anderson-Tully Co.* 408

IV. **Jurisdiction of this Court.**

(1) *Generally.*

1. *Inadvertent Assumption of Jurisdiction* where no question of jurisdiction was raised or considered, does not establish jurisdiction for that class of cases. *Baldwin Co.* v. *Howard Co.* 35
American Steel Foundries v. *Whitehead*..... 40

JURISDICTION—*Continued.* PAGE

2. *Moot Cases; Costs.* Sale of real estate to stranger after judgment for possession and after writ of error from this court renders case moot; costs of writ of error laid upon defendant in error and judgment reversed with directions to dismiss. *Heitmuller* v. *Stokes*. 359

(2) *Original.*

Stipulation. See **Procedure, II, 1.**
Compromise. See *id.*, II, 2.
Mandamus. See also, IV, 11, *infra.*

3. *Suits Between States; Navigable Waters; Sewage; Injunction.* Right of New York to enjoin New Jersey project for discharging sewage into New York Bay, without regard to location of boundary or New York's claim of exclusive jurisdiction over Bay. *New York* v. *New Jersey*. 296

4. *Id. Threatened Injury.* Before court will exercise jurisdiction, threatened injury must be of serious magnitude and clearly established. *Id.*

5. *Id. State Agency.* Sewerage commissioners *held* a statutory, corporate agency of New Jersey, whose acts must be treated as those of State. *Id.*

6. *Mandamus and Prohibition; Exceeding Jurisdiction in Admiralty.* Granting of writs is discretionary when jurisdiction debatable. *Ex parte Hussein Lutfi Bey*. 616

7. *Id. Other Remedies.* Court may issue prohibition (Jud. Code, § 234), even where there is remedy by appeal. *Ex parte State of New York, No. 1*. 490
Ex parte State of New York, No. 2. 503

8. *Id. Mandamus* not granted to correct error where rehearing and certiorari available. *Ex parte National Park Bank*. 131

9. *Id. Prohibition* against District Judge entertaining action against receiver appointed by this court. *Oklahoma* v. *Texas*. 607

(3) *Over Circuit Court of Appeals.* See 8, *supra;* 12, *infra;* V, *infra.*

10. *Affirmance; Waiver of New Trial after Reversal; Assignment of Errors.* Where Court of Appeals reverses District

JURISDICTION—*Continued.* PAGE

Court and defeated party brings case here by waiving new trial and consenting to final judgment in Court of Appeals, this court must affirm if error necessitating reversal was assigned in that court even though ground of decision was different and untenable. *Frey & Son* v. *Cudahy Packing Co.* 208

(4) *Over District Court.* See II; III; IV, 6–10, *supra;* VI, *infra.*

11. *Mandamus. Remand* of case to state court not reviewable here by mandamus. *Ex parte Matthew Addy S. S. Co.* ... 417

12. *Claims; Lever Act; Direct Review.* Jurisdiction under § 10, over suits on awards for supplies requisitioned by Government, is conferred exclusively on District Courts as part of ordinary jurisdiction over actions at law for money, of which right to jury trial is an incident; judgment under that section not reviewable by direct writ of error. *United States* v. *Pfitsch* 547

13. *Findings; Law Action Tried Without Jury.* Finding of District Court conclusive upon matters of fact; in absence of exceptions to rulings of law during trial, review here is limited to sufficiency of complaint. *Vicksburg &c. Ry.* v. *Anderson-Tully Co.* 408

(5) *Over Courts of District of Columbia.*

14. *Final Judgment; Trade-Mark Cases.* Decision of Court of Appeals upon appeal from Commissioner of Patents under § 9, Act of 1905, not reviewable by appeal or certiorari under Jud. Code, §§ 250, 251; such decisions merely certified to Commissioner for further proceedings and are not final judgments. *Baldwin Co.* v. *Howard Co* 35
American Steel Foundries v. *Whitehead* 40

(6) *Over State Courts.* See **Judgments**, 6, 7.

15. *Federal Question; How Reviewed.* State judgment sustaining state tax law, over objection that as construed it violates Constitution or laws of United States, reviewable by writ of error. *Kansas City So. Ry.* v. *Road Imp. Dist. No. 6.* 658
Merchants' Natl. Bank v. *Richmond* 635

16. *Id.* Where state court omits to find facts relevant to federal question, this court will examine evidence on subject. *Id.*

JURISDICTION—*Continued.* PAGE

17. *Id.* In action against Director General of Railroads, whether liability imposed by state law is compensation or penalty requires application of federal law, and state decision imposing penalty is reviewable on writ of error. *Missouri Pac. R. R.* v. *Ault*..... 554

18. *Id. How Raised.* Federal question first raised in state Supreme Court by petition for rehearing, which was merely overruled, not reviewable. *Wall* v. *Ches. & Ohio Ry*..... 125

19. *Local Law; Following State Construction.* Decision on grounds having no relation to federal question and without purpose to evade federal issue, accepted, whether right or wrong. *Nickel* v. *Cole*..... 222

20. *Local Law.* Whether under state long-and-short-haul statute shipper may recover overcharges which he did not pay is a local question. *Missouri Pac. Ry.* v. *McGrew Coal Co.*..... 134

V. **Jurisdiction of Circuit Court of Appeals.** See IV, 8, 10, 12, *supra.*

Final Judgment; Expiration of Term. Court may not reopen case to correct alleged oversight after final judgment on all issues and after expiration of term. *Ex parte National Park Bank*..... 131

VI. **Jurisdiction of District Court.** See II; III; IV, 6–13, *supra.* Removal and remand. See IV, 11, *supra.*

1. *Admiralty; Suit Against State.* Under Eleventh Amendment, suit *in personam* cannot be brought against State, without consent, by individual, whether citizen of State or not. *Ex parte State of New York No. 1* 490

2. *Id.* Whether suit is against State determined, not by names of titular parties, but by nature and effect of proceeding. *Id.*

3. *Id. State Officers.* Where officer impleaded in suits *in rem* against private tugs for damages occasioned while tugs were under charter to him officially, *held* that proceedings against him were *in personam* and essentially against State, beyond jurisdiction of District Court. *Id.*

4. *Id. State Property; Immunity.* Vessel owned by State and employed for government purposes exempt from seizure in

JURISDICTION—*Continued.* PAGE

suit for damages by negligent operation. *Ex parte State of New York, No. 2*.... 503

5. *Id. Establishing Public Status*, by suggestion of attorney general, in connection with special appearance and objection to jurisdiction. *Id.*

6. *Id. Merchant Vessels; Foreign Governments. Quære*: Whether merchant vessel operated by foreign government is immune from process in suit for wharfage and supplies, and whether immunity can be claimed for ship of government which has severed and not resumed diplomatic relations? *Ex parte Hussein Lutfi Bey*.... 616

7. *Id. Prohibition and Mandamus*, to restrain alleged excess of jurisdiction by District Court, discretionary when jurisdiction debatable. *Id.*

8. *Bankruptcy; Summary Proceedings; Adverse Claim Against Trustee.* Claim of assignee for benefit of creditors for compensation and expenses, before adjudication, *held* an adverse claim not subject to summary disposition in bankruptcy proceedings. *Galbraith* v. *Vallely*.... 46

9. *Claims; Lever Act; Concurrent or Exclusive.* Jurisdiction under § 10, over suits on awards for supplies requisitioned by Government, is conferred exclusively on District Courts as part of ordinary jurisdiction over actions at law for money, of which right to jury trial is an incident. *United States* v. *Pfitsch*.... 547

10. *Venue; Reparation Orders; Interstate Commerce Acts.* Provision allowing action in any district through which road runs, applies to district where defendant owns no railroad but has its cars hauled by another carrier for mileage compensation to and from point therein where both share expenses of freight and ticket offices. *Vicksburg &c. Ry.* v. *Anderson-Tully Co.*.... 408

11. *Id.* This provision not repealed by legislation abolishing Commerce Court. *Id.*

12. *Federal Question; Enjoining Franchise Tax.* Whether tax invalid for failure to provide hearing, of right, before commission assessing tax, is open in suit to collect; cannot be relied on in suit to restrain collection by corporation which had hearing and whose valuations were accepted by commission. *St. Louis-San Francisco Ry.* v. *Middlekamp*... 226

JURISDICTION—*Continued.* PAGE

13. *Id.* Suit against Federal Reserve Bank and its officers *held* a suit arising under law of United States within § 24 (1), Jud. Code. *American Bank & Trust Co.* v. *Federal Reserve Bank*..... 350

14. *National Banking Association; Citizenship.* Federal Reserve Bank is not national banking association within § 24 (16) Jud. Code, declaring such associations, for purposes of suit, citizens of States where located. *Id.*

15. *Mandate; Proceedings on.* Jurisdiction, upon affirmance with modifications of decree dismissing bill, through special master, to ascertain excess rates paid by gas consumers, pending litigation, and to require repayment under injunction bond. *Ex parte Lincoln Gas Co* 512

16. *Id. Parties.* Absence of consumers no obstacle to such enforcement of their rights, represented in litigation by city and recognized by bond. *Id.*

17. *Id. Overcharges Before and After Decree.* Dismissal without prejudice to new suit under changed conditions, does not restrict jurisdiction as to overcharges made pending the suit. *Id.*

VII. **Jurisdiction of State Courts.** See IV (6), *supra;* **Judgments,** 6, 7.

Removal and remand. See IV, 11, *supra.*

JURY. See **Constitutional Law,** IX, 9; **Jurisdiction,** IV, 12, 13.
Instructions; self-defense. See **Criminal Law,** 3–5.

LAND DEPARTMENT. See **Public Lands.**

LANDLORD AND TENANT. See **Indians,** 16–19.

1. *District of Columbia Rents Act.* Letting of buildings *held* clothed with public interest justifying regulation by Congress during emergency. *Block* v. *Hirsh*. 135

2. *Id. Contract Rights.* Act allowing tenant to retain possession at rent stipulated in expired lease, is constitutional. *Id.*

3. *Id.* Temporary regulation *held* justified; did not become otherwise if reasonable rent fixed deprived owners of profiting by influx of people to Washington. *Id.*

LANDLORD AND TENANT—*Continued.* PAGE

4. *Id. Jury Trial.* The act, being valid in principal aspects, not to be annulled because it might deprive landlords and tenants of trial by jury on right to possession. *Id.*

5. *New York Housing Acts.* Do not exceed police power in requiring reasonable rents and denying right to recover possession except on certain grounds. *Marcus Brown Co.* v. *Feldman*. 170

6. *Id.* As applied to tenant holding over under unexpired lease, regulation does not violate rights of landlord under Fourteenth Amendment or Contract Clause, although lease executed before and expired after enactment and landlord before enactment had entered into new lease with third party. *Id.*

7. *Id. Involuntary Servitude.* Provision penalizing apartment-house owners who fail to furnish heat, water, etc., does not impose involuntary servitude. *Id.*

8. *Id. Classification; Municipalities.* Discrimination in not including cities of less than specified population, or buildings occupied otherwise than as dwellings, or in course of construction, upheld. *Id.*

LEASE. See **Indians**, 16–19; **Landlord and Tenant.**

LEVER ACT. See **Jurisdiction**, VI, 9.

LICENSE. See **Municipal Corporations**, 1, 2.

LICENSE TAX. See **Taxation**, II, 10–12.

LIFE INSURANCE. See **Insurance.**

LIMITATIONS. See **Public Lands**, I.

LIMITED LIABILITY. See **Interstate Commerce Acts**, II.

LOCAL LAW. See **Jurisdiction**, IV, 19, 20.

MAILS:

1. *Transportation; Adjustment of Compensation.* Where railroad discontinued train service causing diversion, readjustment by Department of compensation under Act 1912,

MAILS—*Continued.* PAGE

passed after date of contract, did not violate contract although it diminished compensation, in part retroactively. *Missouri, Kans. & Tex. Ry.* v. *United States*. 610

2. *Id. Weighing.* Act 1912 allows readjustment after weighing of diverted mails only; proviso that they must equal 10% of average daily weight on any of routes affected, *construed. Id.*

MANDAMUS. See **Jurisdiction,** IV, 6–8, 11; VI, 7; **Procedure,** III.

MANDATE. See **Jurisdiction,** VI, 15–17.

MARRIED WOMEN. See **Indians,** 14, 15.

MASSACHUSETTS.

Income tax. See **Taxation,** II, 1–4.

MASTER, SPECIAL. See **Jurisdiction,** VI, 15–17; **Procedure,** II, 8.

MASTER AND SERVANT. See **Criminal Law,** 1; **Employer and Employee; Municipal Corporations,** 5.

MINES AND MINING.

Ore lands; valuation. See **Taxation,** I, 6–8.

1. *Lode Locations; End Lines; Rev. Stats.,* § *2322.* With respect to right to pursue vein extralaterally on dip, those are "end lines" that cut across strike of vein. *Silver King Co.* v. *Conkling Co* 18

2. *Id. Discovery; Presumption.* No presumption of discovery vein crossing end lines of location as laid out, for purpose of denying extralateral rights to vein crossing side lines, where there is evidence that this was only vein apexing within location. *Id.*

3. *Id. Discovery Shaft; Adjoining Patents.* Where vein of patented claim crossed location transversely, right to pursue it on dip beneath adjacent junior patented claim not affected by fact that either discovery shafts of senior claim or vein would be left outside of it if its side lines (located as end lines) were limited as they should be, because discovery

MINES AND MINING—*Continued.* PAGE

shaft was not essential to validity of location at time when made, and because discovery of vein presumed in favor of senior patent. *Id.*

4. *Vein; Evidence* that one of series of similar deposits, found at many different horizons, connected with fissure vein and similar in composition to ore in fissure, was part of that vein rather than a distinct bedded deposit. *Id.*

MINNESOTA. See **Narcotic Drugs; Procedure,** II, 13.

MISSISSIPPI. See **Boundaries,** 1.

MISSOURI. See **Taxation,** II, 14–21.
Long-and-short-haul statute. See **Carriers,** 10, 11.

MISTAKE. See **Contracts,** 5, 6; **Interstate Commerce Acts,** I, 3; II; **Jurisdiction,** IV, 1.

MONOPOLIES. See **Anti-Trust Act.**

MOOT CASE. See **Procedure,** VI, 1.

MUNICIPAL CORPORATIONS. See **Taxation,** II, 3, 25–27.
Rent regulation. See **Constitutional Law,** I, 2; III, 2; IX, 5–9; XII, 5, 6, 20.
Ordinance rates. See **Jurisdiction,** VI, 15–17.

1. *District of Columbia; Streets; Vault Space; License.* Building regulations not to be looked to for grants in streets; permits to build vaults under sidewalks strictly construed and are revocable licenses. *District of Columbia,* v. *Andrews Paper Co* 582

2. *Id. Presumption.* Application for permission to build such vault, followed by construction and use, may support presumption of license but not of permanent grant. *Id.*

3. *Id. Rent.* Act of 1916, directing collection of rent from users of space under streets, applies to vaults constructed before as well as after act. *Id.*

4. *Id. Government Functions; Street Cleaning,* for protection of public health, appertains to discretionary govern-

MUNICIPAL CORPORATIONS—*Continued.* PAGE
mental functions of District, distinguished from duty to repair. *Harris* v. *District* v. *of Columbia*. 650

5. *Employees; Negligence.* District not liable for personal injuries due to negligence of employee sprinkling streets. *Id.*

MURDER. See **Criminal Law**, 3–5.

NARCOTIC DRUGS.
1. *Minnesota Laws, 1915*, regulating administration, sale and possession, *upheld*. *Whipple* v. *Martinson*. 41

2. *Id. Federal Act.* State law forbidding physicians to supply drug addicts otherwise than through prescriptions, not in conflict with federal act. *Id.*

NATIONAL BANKS. See **Banks and Banking; Jurisdiction**, VI, 13, 14.
Shares; State Taxation; Rev. Stats., § 5219. Words "Moneyed capital in hands of individual citizens," in provision that state taxation shall not be at greater rate than assessed upon moneyed capital in hands of individual citizens of such State, include bonds, notes, etc., in hands of individuals, which come into competition with national banks in loan market. *Merchants' Natl. Bank* v. *Richmond* 635

NATIONAL PROHIBITION ACT. See **Constitutional Law**, XIV, 3; **Intoxicating Liquors; Statutes**, 2, 3.

NAVIGABLE WATERS. See **Boundaries; Contracts**, 1–6; **Waters.**

NEGLIGENCE. See **Interstate Commerce Acts**, II, 1; **Municipal Corporations**, 5; **Telegraph Companies.** Immunity of State from suit. See **Admiralty**, 4–8.

NEGOTIABLE PAPER. See **National Banks.**

NEW JERSEY. See **Waters**, 11–14.

NEW MEXICO. See **Taxation**, II, 6–10.

NEW TRIAL.
Waiver. See **Jurisdiction**, IV, 10.

NEW YORK. See **Waters**, 11–14. PAGE
Housing Acts. Legislation regulating rights of landlords and tenants during emergency, sustained. *Marcus Brown Co.* v. *Feldman*. 170

NORTH DAKOTA. See **Procedure**, II, 13.

NORTHWEST TERRITORY. See **Waters**, 2–4.

NOTICE. See **Attachment**, 3; **Bankruptcy Act**, 2; **Carriers**, 7, 8; **Constitutional Law**, XII (1); **Indians**, 18, 19; **Interstate Commerce Acts**, II, 2–4; **Judicial Notice**; **Public Lands**, I.

NUISANCE. See **Equity**, 2–4; **Evidence**, 6.

OFFICERS. See **Carriers**, 2–6; **Contracts**, 2, 3; **Constitutional Law**, XIV, 2; **Indians**, 1, 2, 11; **Public Lands**, II, 8; **Telegraph Companies**, 2, 3.
Administrative decisions. See **Indians**, 5, 6, 8–10, 14–19; **Interstate Commerce Acts**, III; **Mails**; **Public Lands**, I; II, 6, 7, 11; **Trade-Marks**; **Waters**, 10.
Bribery. See **Criminal Law**, 1.
Reports to Congress. See **Statutes**, 5.
Suit against State. See **Jurisdiction**, VI, 1–5.

OIL LEASES. See **Indians**, 16–19.

OKLAHOMA. See **Boundaries**, 3–5; **Procedure**, II, 4–12.
Rights of husband in estate of wife, Okla. Code, § 8341. See **Indians**, 15.
Enabling Act; admission of State; Indian leases. See *Id.*, 19.
Street improvements. See **Taxation**, II, 25–27.

OMAHA INDIANS. See **Indians**, 3–6.

ORDINANCE 1787. See **Waters**, 2–4.

ORIGINAL CASES. See **Boundaries**; **Procedure**, II.

PARTIES. See **Pleading**.
Appearance. See **Attachment**.
Citizenship; banking associations. See **Jurisdiction**, VI, 14.
Intervention. See **Procedure**, II, 1, 12.

PARTIES—*Continued.* PAGE

Consolidation; original cases. See **Procedure**, II, 13.
Reparation orders; suit to enforce during federal control. See **Interstate Commerce Acts**, III.
Res judicata. See **Judgments**, 3–7.
State; suit against. See **Jurisdiction**, VI, 1–3.

1. *Suits Between States; Corporate Agency.* Passaic Valley Sewerage Commissioners *held* a statutory, corporate agency of New Jersey, whose acts must be treated as those of State. *New York* v. *New Jersey* 296

2. *Railroads; Federal Control Act.* Right to sue owner-company or Government's operating agency, where action arose before and where it arose during government operation. *Missouri Pac. R. R.* v. *Ault* 554

3. *Id. Substitution.* Order that suits arising during federal control be brought against Director General and providing for substitution in pending suits, sustained. *Id.*

4. *Gas Consumers; Injunction; Ordinance Rates.* Absence of consumers no obstacle to enforcement of refund of excess payments, represented in litigation by city and recognized by injunction bond. *Ex parte Lincoln Gas Co* 512

5. *Foreign Ambassador.* Intervention, as *amicus curiæ*, to certify to requisition of vessel by government for war purposes. *Texas Co.* v. *Hogarth Shipping Co.* 619

PATENTS FOR INVENTIONS:

1. *Lamp Sockets.* Patent No. 743,206, claims 1 and 4, for device for fastening together metal cap and sleeve of incandescent electric lamp socket, *held* not infringed. *Weber Elec. Co.* v. *Freeman Elec. Co.* 668

2. *Id. Later Patent.* Patent having made no provision for lock against rotative movement between cap and sleeve, not aided by resort to later patent to same patentee, providing slot and projection to overcome deficiency. *Id.*

3. *Id. Scope of Claims; Prior Art.* In view of prior art, patentee's concessions made in patent office, and his later patent, the words "telescopically received" and "telescopically applied," restricted to direct longitudinal movement of sleeve into cap. *Id.*

4. *Id. Amendment; Equivalents.* One who has specifically narrowed claim in Patent Office to secure patent, may not

PATENTS FOR INVENTIONS—*Continued.* PAGE

afterwards, by construction or resort to doctrine of equivalents, give to it larger scope it might have had if not so amended. *Id.*

PAYMENT. See **Contracts; Insurance.**

PENALTIES. See **Carriers,** 5, 6; **Constitutional Law,** XI; **Criminal Law,** 6–8; **Statutes,** 1–3.

PERFORMANCE. See **Admiralty,** 12, 13; **Contracts.**

PERSONAL INJURY. See **Employer and Employee; Municipal Corporations,** 5.

PHYSICIANS. See **Narcotic Drugs.**

PLEADING. See **Procedure,** VI, 3.

Issues; examination to determine question of *res judicata.* See **Judgments,** 4.

1. *Petition; Sufficiency.* Petition to enforce reparation order, *held* sufficient under § 16 of Commerce Act, prescribing that it set forth briefly causes for which damages are claimed and order of Commission. *Vicksburg &c. Ry.* v. *Anderson-Tully Co.* 408

2. *Id. Technicalities; Contract or Quantum Meruit.* While under act authorizing suit in Court of Claims against Choctaw Nation right of heirs of delegate appointed by Nation to press money claims against United States services of ancestor must be determined upon principle of *quantum meruit,* petition alleging valuable services not rejected upon technical ground that it asserted and relied upon contract. *Garland's Heirs* v. *Choctaw Nation* 439

3. *New Defense; Second Trial.* Right of United States, upon reversal of judgment in its favor, to set up statutory repeal at second trial which was ignored at the first. *Chase, Jr.* v. *United States* 1

4. *State as Party; Determination from Record.* Whether suit is against State determined, not by names of titular parties, but by essential nature and effect of proceeding. *Ex parte State of New York, No. 1* 490

PLEADING—*Continued.* PAGE

5. *Public Status of Vessel,* may be established, *prima facie,* by suggestion of attorney general of State, in connection with special appearance and objection to jurisdiction. *Ex parte State of New York, No. 2* 503

6. *Original Cases; Special Issues.* Order directing hearing on special issues between parties and interveners. *Oklahoma v. Texas* 605

POLICE POWER. See **Constitutional Law.**

POSTMASTER GENERAL. See **Mails; Telegraph Companies,** 2, 3.

PREFERENCE. See **Interstate Commerce Acts,** II, 2–4.

PRESUMPTION. See **Attachment,** 3; **Evidence,** 2, 3; **Judicial Notice; Mines and Mining,** 2–4; **Municipal Corporations,** 1, 2; **Taxation,** II, 4.

PRIMARY ELECTIONS. See **Constitutional Law,** V.

PRINCIPAL AND AGENT. See **Contracts,** 9, 10; **Evidence,** 4; **Indians,** 1, 2; **Interstate Commerce Acts,** I, 1–3; **Telegraph Companies.**

PRIVILEGES AND IMMUNITIES. See **Constitutional Law,** XII (4).

PROCEDURE. See **Admiralty; Attachment; Bankruptcy Act; Equity; Evidence; Interstate Commerce Acts,** III; **Judgments; Judicial Notice; Jurisdiction; Parties; Patents for Inventions; Pleading; Statutes; Trade-Marks; Trial.**

Administrative decisions. See **Indians,** 5, 6, 8–10, 14–19; **Interstate Commerce Acts,** III; **Mails; Public Lands,** I; II, 6, 7, 11; **Trade-Marks; Waters,** 10.

Amendment. See **Patents for Inventions,** 3, 4.

Appearance. See **Attachment; Jurisdiction,** III; VI, 5.

Assignment of errors. See **Jurisdiction,** IV, 10.

Certiorari. See *Id.,* IV, 8, 14.

Damages. See **Interstate Commerce Acts,** III.

Federal question. See **Jurisdiction,** IV, 15–18; VI, 12, 13.

PROCEDURE—*Continued.* PAGE

Final judgment. See **Jurisdiction**, IV, 10, 14; V.
Injunction. See **Equity**; **Jurisdiction**, VI, 15–17.
Instructions. See **Criminal Law**, 3–5.
Intervention. See **Parties**, 5; *infra*, II, 1, 12.
Limitations. See **Public Lands**, I.
Local law. See **Jurisdiction**, IV, 19, 20.
New trial. See **Jurisdiction**, IV, 10.
Penalties. See **Carriers**, 5, 6; **Criminal Law**, 6–8; **Statutes**, 1–3.
Presumption. See **Attachment**, 3; **Evidence**, 2, 3; **Judicial Notice**; **Mines and Mining**, 2–4; **Municipal Corporations**, 1, 2; **Taxation**, II, 4.
Process; service of. See **Admiralty**, 1; **Jurisdiction**, III.
Rehearing. See **Jurisdiction**, IV, 8, 18; *infra*, IV.
Remedies. See **Telegraph Companies**, 4.
Res judicata. See **Judgments**, 3–7.
Venue. See **Interstate Commerce Acts**, III, 1, 2.

I. **General.**

1. *New Defense.* Whether defendant, upon reversal of judgment in his favor, may introduce new defense which was available on first trial is not a question of jurisdiction but of practice. *Chase, Jr.* v. *United States* 1

2. *Id. Statutory Repeal*, may be set up at second trial, though ignored at first. *Id.*

II. **Original Cases.** See **Evidence**, 5, 6; **Jurisdiction**, IV, (2); **Parties**, 1.

1. *Suits Between States; Injunction; Intervention by United States; Dismissal Without Prejudice. Stipulation*, between United States and New Jersey sewerage commissioners, for modification of method of treating sewage, and allowing Government inspection, *held* binding on New Jersey and United States. *New York* v. *New Jersey* 296

2. *Id. Compromise.* Court suggests problem be solved by coöperative study and conference and mutual concession by States, rather than by proceedings in court. *Id.*

3. *Final Decree; Boundary.* Confirming report of commissioners, establishing boundary, allowing expenses and costs. *Arkansas* v. *Mississippi* 28

4. *Interlocutory Decree*, declaring state boundary, setting case for hearing as to more definite location, directing as to

PROCEDURE—*Continued.* PAGE

evidence taken and taking of further evidence, and appointing commissioner. *Oklahoma* v. *Texas* 608

5. *Order. Receiver*, directed to sink oil and gas wells. *Id.*, 602, 603.

6. *Id.* Directed to limit development work, impound part of proceeds of gas wells, settle claims, etc. *Id.*, 604.

7. *Id.* Authorized to reimburse operators and drillers of wells. *Id.*, 607.

8. *Id. Special Master*, to hear and report on claims to moneys held by receiver. *Id.*, 603.

9. *Id. Commissioner*, appointed to take and report evidence. *Id.*, 605.

10. *Id. District Court. Prohibition* against entertaining action against receiver. *Id.*, 607.

11. *Id. Argument.* Case set for hearing on special issues between parties and interveners. *Id.*, 605.

12. *Id. Intervention.* Order forbidding filing of petitions without special leave. *Id.*, 610.

13. *Id. Reargument; Supplemental Proofs; Consolidation.* Order restoring to docket, directing taking of supplemental proofs, and suggesting consolidation with another case. *North Dakota* v. *Minnesota* 220

III. **Mandamus and Prohibition.** See II, 10, *supra.*

Removal and remand. See **Jurisdiction**, IV, 11.

1. *Excess of Jurisdiction; Admiralty.* Writs discretionary when jurisdiction of District Court debatable. *Ex parte Hussein Lutfi Bey* 616

2. *Id. Other Remedies.* Court may issue prohibition (Jud. Code, § 234), even where there is remedy by appeal. *Ex parte State of New York, No. 1* 490

3. *Id. Mandamus* not granted to correct error where rehearing and certiorari available. *Ex parte National Park Bank* 131

PROCEDURE—*Continued.* PAGE

IV. **Rehearing.** See **Jurisdiction,** IV, 8, 18.

Former Decision. Petition for rehearing treated as motion for determination of questions argued but left open by former decision. *Silver King Co.* v. *Conkling Co.* 18

V. **Mandate.**

Proceedings After Affirmance. Power of District Court, through special master, to ascertain excess rates paid by gas consumers, pending litigation, and to require repayment under injunction bond. *Ex parte Lincoln Gas Co* 512

VI. **Scope of Review and Disposition of Case.**

1. *Moot Cases; Costs.* Sale of real estate to stranger after judgment for possession and after writ of error from this court, renders case moot; costs of writ of error laid upon defendant in error and judgment reversed with directions to dismiss. *Heitmuller* v. *Stokes* 359

2. *Affirmance; Waiver of New Trial after Reversal; Assignment of Errors.* Where Circuit Court of Appeals reverses District Court and defeated party brings case here by waiving new trial and consenting to final judgment in Court of Appeals, this court must affirm if error necessitating reversal was assigned in that court even though ground of decision was different and untenable. *Frey & Son* v. *Cudahy Packing Co.* 208

3. *Findings of District Court,* in law action tried without jury conclusive upon matters of fact; in absence of exceptions to rulings of law during trial, review here is limited to sufficiency of complaint. *Vicksburg &c. Ry.* v. *Anderson-Tully Co.* 408

4. *Determining Federal Question.* Where state court omits to find facts relevant to question of federal law, this court will examine evidence on subject. *Merchants' Natl. Bank* v. *Richmond* 635

5. *Id. Accepting State Construction.* State decision on grounds having no relation to federal question and without purpose to evade federal issue, accepted, whether right or wrong. *Nickel* v. *Cole* 222

PROCESS. See **Admiralty,** 1; **Jurisdiction,** III.

PROHIBITION. See **Procedure**, II, 10; III. PAGE

PROHIBITION ACT. See **Constitutional Law**, XIV, 3; **Intoxicating Liquors; Statutes**, 2, 3.

PUBLIC LANDS. See **Mines and Mining.**
Railroads; army transportation; land-grant deductions. See **Interstate Commerce Acts**, I, 4–6.

I. **Homesteads.** See II, 5, *infra.*
Cancelation; Preferred Right of Contestant; Withdrawal. Under Act of 1880, allowing successful contestant 30 days from notice of cancelation to enter lands, *held*, adopting construction of Land Department, that where withdrawal prevented entry for more than 30 days after notice, contestant had 30 days after tract restored to public entry to exercise preferred right. *McLaren* v. *Fleischer* 477
Culpepper v. *Ocheltree* 483

II. **Railroad Grants.**

1. *Northern Pacific Grant, 1864*, embodied proposal that, if company would construct and operate road, it should receive land comprehended by grant. *United States* v. *Northern Pac. Ry.* 51

2. *Id. Contract Right.* Acceptance of proposal and construction of road created contract, entitling company to performance by Government. *Id.*

3. *Id. Indemnity Provision*, was as much part of grant as that relating to land in place; right to land within indemnity limits in lieu of land lost within place limits protected by due process clause. *Id.*

4. *Id. Withdrawal.* Assuming land applicable as indemnity remaining within indemnity limits was not enough to make up for unsatisfied losses in place limits, Government cannot deprive company's successor of right to such land by setting it aside for forest purposes. *Id.*

5. *Id. Selection; When Right to Specific Tract Attaches.* Rule that no right within indemnity limits attaches to specific tract until selected, applies as between company and settlers under homestead and preëmption laws, and also between company and United States when lands available for indemnity exceed losses; it has no application as between

PUBLIC LANDS—*Continued.* PAGE

company and United States if lands for indemnity are insufficient. *Id.*

6. *Id. Deficiency; Determination by Land Department.* Whether indemnity lands sufficient to satisfy losses in place limits is primarily for Land Department to decide. *Id.*

7. *Id. By Courts; Proof of Deficiency.* Where Department, without deciding question, reserved part of indemnity lands for forest purposes, and afterwards inadvertently issued patent to railroad upon its selection, question could be determined in suit brought later by Government to set aside patent, but only upon clear showing of facts, since decision might conclude both parties as to other lands as well as those immediately involved. *Id.*

8. *Id. Adjustment Act.* Report of Commissioner of General Land Office on adjustment of grant showing a deficiency does not establish existence thereof, unless approved by Secretary of Interior. *Id.*

9. *Id. Measure of Grant.* Stipulation that all lands received by company under grant and all that it was possible for it to receive thereafter, whether as place or indemnity lands, did not equal sum-total of all odd-numbered sections within primary or place limits, *held* not to establish deficiency, since measure of grant might be less than aggregate of odd-numbered sections within place limits, due to partial overlapping with another grant, or to deductions under § 6 of granting act if route followed general line of another road with prior grant. *Id.*

10. *Id. Judicial Notice* not taken of presence or absence of such conditions. *Id.*

11. *Id. Time of Deficiency; Finding of Secretary.* Existence of deficiency when Government withdrew lands not established by finding that deficiency existed six years later. *Id.*

QUANTUM MERUIT. See **Contracts**, 10.

QUAPAW INDIANS. See **Indians**, 14, 15.

RAILROADS. See **Carriers; Employer and Employee; Interstate Commerce Acts; Mails.**

RAILROADS—*Continued.*
Federal control; bribery of employees. See **Criminal Law**, 1.
Id. Actions against. See **Carriers**, 2–6; **Interstate Commerce Acts**, III, 3, 4.
Id. Franchise tax. See **Taxation**, II, 18.
Consolidation; assignment of claims against United States. See **Claims**.
Land grants. See **Public Lands**, II.
Franchise tax. See **Taxation**, II, 13–21.
Local improvements. See *id.*, II, 23–27.

RATES. See **Carriers**, 9–11; **Interstate Commerce Acts**, I, 3–6.
Reparation orders. See **Interstate Commerce Acts**, III.
Telegraph companies. See *id.*, II.
Gas companies; refund of excess collected pending appeal. See **Jurisdiction**, VI, 15–17.

RATIFICATION. See **Constitutional Law**, VII; XIV.

RECEIVERS. See **Procedure**, II, 5–8, 10.

REHEARING. See **Jurisdiction**, IV, 8, 18; **Procedure**, IV.

REMAINDER INTERESTS. See **Taxation**, II, 5.

REMOVAL. See **Jurisdiction**, IV, 11.

RENT. See **Landlord and Tenant**; **Municipal Corporations**, 3.

REPRESENTATIVES.
Election. See **Constitutional Law**, V.

RES JUDICATA. See **Judgments**, 3–7.

REVENUE LAWS. See **Constitutional Law**, IV; XII, 18; **Intoxicating Liquors**, 2, 3; **Statutes**, 2, 3; **Taxation**, I.
Stamps. See **Taxation**, I, 11.

REVERSION See **Taxation**, II, 27.

SALES. See **Anti-Trust Act**; **Narcotic Drugs**; **Taxation**, I, 11; II, 6–12.

SEARCHES AND SEIZURES. See **Constitutional Law,** VIII; IX, 1.

SECRETARY OF THE INTERIOR. See **Indians,** 5, 6, 8–11, 14–19; **Public Lands,** II, 6–8, 11.

SECRETARY OF STATE. See **Constitutional Law,** XIV, 2.

SECRETARY OF WAR. See **Contracts,** 3, **Waters,** 10.

SELF-DEFENSE. See **Criminal Law,** 3–5.

SELF-INCRIMINATION. See **Constitutional Law,** IX, 1.

SENATORS.
Election. See **Constitutional Law,** V.

SERVICE OF PROCESS. See **Admiralty,** 1; **Jurisdiction,** III.

SEVENTEENTH AMENDMENT. See **Constitutional Law,** V, 5–10.

SHAREHOLDERS. See **National Banks.**

SIDEWALKS.
Vaults under. See **Municipal Corporations,** 1–3.

SPECIAL MASTER. See **Jurisdiction,** VI, 15–17; **Procedure,** II, 8.

STAMP TAX. See **Taxation,** I, 11.

STATES. See **Boundaries; Taxation,** II; **Waters.**
Courts. See **Judgments,** 6, 7; **Jurisdiction,** IV, 11, 15–20.
Original suits. See **Procedure,** II.
Constitutional amendments; ratification. See **Constitutional Law,** VII, XIV.
Officers; suits against. See **Jurisdiction,** VI, 1–5.
Id. Corporate agency. See *id.*, IV, 5.
Banks. See **Banks and Banking.**
Id. Citizenship. See **Jurisdiction,** VI, 14.
Elections; reserved powers. See **Constitutional Law,** V.
Penalties; state law; railroads; federal control. See **Carriers,** 5, 6.
Local law. See **Jurisdiction,** IV, 19, 20.

STATE, SECRETARY OF. See **Constitutional Law, XIV, PAGE 2.**

STATUTES. See **Anti-Trust Act; Attachment; Bankruptcy Act; Carriers; Chinese Exclusion Acts; Claims; Constitutional Law; Criminal Law; Customs Law; Employer and Employee; Indians; Insurance; Interstate Commerce Acts; Intoxicating Liquors; Jurisdiction; Landlord and Tenant; Mails; Mines and Mining; Narcotic Drugs; National Banks; Public Lands; Taxation; Telegraph Companies; Trade-Marks; Waters.**

Retroactive statutes. See **Mails.**

Federal Corrupt Practices Act; construction. See **Constitutional Law, V.**

1. *Penal Statutes; After-Acquired Power*, cannot *ex proprio vigore* validate statute void when enacted. *Newberry* v. *United States*. 232

2. *Id. Implied Repeal.* Declaration of § 35, Prohibition Act, that it shall not relieve from civil or criminal liability "incurred under existing laws," read in light of principles governing construction of penal statutes, the Eighteenth Amendment, and other provisions of the act, concerning liquor for beverage purposes. *United States* v. *Yuginovich*. 450

3. *Id.* So construed, Prohibition Act, as to liquors for beverage purposes, repeals Rev. Stats., § 3257, which imposes heavier punishment for fraud by distiller, as well as other penal sections designed to protect revenue from distilled spirits. *Id.*

4. *Legislative History*, considered in determining jurisdiction of District Court over claims against United States under § 10 of Lever Act. *United States* v. *Pfitsch*. 547

5. *Executive Practice and Reports to Congress*, on determination of heirs of Indian allottees, and legislation limiting appropriations, considered in determining power of Secretary of the Interior. *United States* v. *Bowling*. 484

STIPULATION. See **Procedure, II, 1.**

STOCK DIVIDEND. See **Taxation, I, 6-8.**

STOCKHOLDERS. See **National Banks.**

STREETS AND HIGHWAYS. See **Municipal Corporations; Taxation,** II, 23–27. PAGE

STREET RAILWAYS. See **Taxation,** II, 13.

SUBSTITUTION. See **Parties,** 3.

SUGGESTION. See **Jurisdiction,** VI, 5.

SUPERSEDEAS. See **Jurisdiction,** VI, 15–17.

SURETIES. See **Attachment.**

SURPLUS. See **Taxation,** I, 7; II, 20.

TARIFF ACT 1913. See **Customs Law.**

TARIFFS. See **Interstate Commerce Acts,** I, 5, 6; II; III, 6.

TAXATION. See **Constitutional Law,** IV; XII; **Criminal Law,** 8; **Customs Law; National Banks.**

I. **Federal Taxation.**

1. *Income Tax Act, 1918; Deductions. Estate taxes* imposed by Act of 1916 *held* deductible from gross income. *United States* v. *Woodward* 632

2. *Id.* "*Accrual.*" Estate tax "accrued" when, by terms of Act of 1916, it became due, *viz.*, one year from decedent's death; when paid by executors after tax year in which it accrued but before their return of income for that year was made, it was properly deducted. *Id.*

3. *Estate Tax.* Tax on transfer of net estates of decedents, imposed by Act of 1916, *held* an indirect tax not requiring apportionment, and not an interference with state regulation of descent and distribution. *New York Trust Co.* v. *Eisner* 345

4. *Id.* That tax may occasion inequalities in amounts received by beneficiaries does not affect validity. *Id.*

5. *Id. Deductions.* "Charges against the estate," deductible under § 203 in computing net value, affect estate as a whole, and do not include state inheritance taxes on shares of individual beneficiaries. *Id.*

TAXATION—*Continued.* PAGE

6. *Excess Profits; Deductions; Invested Capital.* Act of 1917, providing for deduction of percentage of "invested capital," does include in that term marking up of valuation of assets on corporate books to correspond with increase of market value or any paper transaction by which new shares are issued in exchange for old ones in same corporation, but which is not in substance a new acquisition of capital property by it. *La Belle Iron Works* v. *United States.* 377

7. *Id. Ore Lands.* Increase of value and issuance of new and additional stock in exchange for old may not be included in "invested capital" under § 207 (a) (3) as "paid in or earned surplus and undivided profits"; nor under *id.* (2) as "actual cash value of tangible property paid in other than cash, for the stock or shares" of corporation. *Id.*

8. *Id. Discrimination.* Reasons for basing "invested capital" upon actual costs to exclusion of higher estimated values; resulting inequalities to corporations differently situated not arbitrary discrimination. *Id.*

9. *Intoxicating Liquors.* May be taxed by Congress, notwithstanding production is prohibited, for moral end as well as to raise revenue. *United States* v. *Yuginovich* 450

10. *Id. Revenue Laws; Distillers; Repeal; Prohibition Act.* Rev. Stats., § 3257, punishing distillers who defraud United States of tax, and other sections, *held* superseded as respects manufacture for beverage purposes by § 35, Prohibition Act, imposing double tax and lighter penalty. *Id.*

11. *Stamp Tax; Act 1914.* Liability of manufacturer of chewing gum, manufactured and prepared for sale and removed to its warehouses for future sale to wholesalers. *United States* v. *American Chicle Co.* 446

II. State Taxation. See I, 3, *supra.*

1. *Legislative Policy; Equality.* This court cannot revise state tax systems to produce more just distribution of burdens. *Dane* v. *Jackson* 589

2. *Id.* Only flagrant and palpable inequality between burdens and benefits will render tax law invalid. *Id.*

3. *Id. Massachusetts; Income Tax; Intangible Personal Property.* Tax system which returns to plaintiff's town less

TAXATION—*Continued.* PAGE

income tax than he and other inhabitants pay, and distributes overplus to other towns which may use it for local purposes, not invalid. *Id.*

4. *Id. Public Use. Presumption* that money devoted to lawful public uses. *Id.*

5. *Inheritance Tax. Remainder Interests,* which vested after tax law approved but before effective date, but which were subjected to it by state court upon theory that vesting occurred after effective date, not taxed in violation of Fourteenth Amendment. *Nickel* v. *Cole* 222

6. *Excise Tax; Interstate Commerce; Severability.* Tax on sale of gasoline, assuming it intended to include interstate and domestic transactions, not void *in toto* in application to distributer engaged in both, since enforcement as to interstate business may be enjoined. *Bowman* v. *Continental Oil Co.* 642

7. *Id.* Gasoline imported from another State but used in business of distributer, loses interstate character and may be subjected to excise tax. *Id.*

8. *Id.* As applied to local sale and use of gasoline by distributer, tax is consistent with due process and equal protection clauses. *Id.*

9. *New Mexico Constitution; Uniformity.* Tax upon use is not a tax on tangible property, but an excise tax, and conforms to requirement of uniformity. *Id.*

10. *License Tax,* on distribution, invalid where interstate and intrastate business necessarily are conducted indiscriminately at same stations. *Id.*

11. *Id. Foreign Corporations.* Where State taxed business of selling automobiles in State, with reduction in amount where percentage of assets were invested in bonds of State or other property there situate, *held* that, assuming foreign corporations were doing business in State and were subject to her jurisdiction, statute discriminated against them. *Bethlehem Motors Co.* v. *Flynt* 421

12. *Id. Interstate Commerce.* Without such assumption, *held* that tax discriminated against their products. *Id.*

TAXATION—*Continued.* PAGE

13. *Street Railway; Interstate Bridge.* Tax assessed by valuing tangible property, adding valuation of "all other property" and assigning proportion to taxing State, cannot be regarded as a burden on franchise to conduct traffic over bridge, upon ground that "other property" valued consisted solely of that franchise, where value of railway was due to exclusive rights and lucrative arrangements with other companies. *St. Louis &c. Ry.* v. *Hagerman* 314

14. *Franchise Tax; Hearing.* Whether act taxing capital stock and surplus employed in State lacks due process in not providing hearing of right, before commission assessing tax, is open in suit to collect tax; cannot be relied on in District Court to restrain collection by corporation which had hearing and whose valuations were accepted by commission. *St. Louis-San Francisco Ry.* v. *Middlekamp* 226

15. *Id. Discrimination.* Corporation cannot complain that it was taxed disproportionately as compared with other railroads, commission not having acted fraudulently. *Id.*

16. *Id. Foreign Corporations.* Where law subjects foreign corporations with stock having no stated par value to tax, it does not discriminate against domestic corporations whose stock has stated par value. *Id.*

17. *Id. Commerce Clause,* not contravened, even if value of franchise derived partly from interstate business. *Id.*

18. *Id. Federal Control,* during tax year, did not exonerate railroad from tax. *Id.*

19. *Id. Double Taxation; Missouri Constitution,* not violated by act. *Id.*

20. *Id. Missouri Law.* "*Surplus,*" is excess in value of assets in State (where corporation employs part of "capital stock" in business elsewhere) over capital stock employed in State. *Id.*

21. *Id.* While statute in one clause describes tax as measured by capital stock employed in State, other clauses show intention to include also surplus so employed. *Id.*

22. *National Bank Shares. Rev. Stats.,* § *5219.* Words "moneyed capital in hands of individual citizens," in

TAXATION—*Continued.* PAGE

provision that state taxation shall not be at greater rate than assessed upon moneyed capital in hands of individual citizens of State, include bonds, notes, etc. in hands of individuals, which come into competition with national banks in loan market. *Merchants' Natl. Bank* v. *Richmond*. 635

23. *Local Improvements; Railroad* property may not be burdened upon basis so different from that used in ascertaining contribution from individual owners as to produce inequality. *Kansas City So. Ry.* v. *Road Imp. Dist. No. 6*. 658

24. *Id.* Arkansas statute, authorizing local assessments, *held* to deny equal protection. *Id.*

25. *Id.* Taxability, for street improvement, of right of way constituting part of interstate system, originally granted by Congress for development of Choctaw Coal lands. *Choctaw, O. & G. R. R.* v. *Mackey* 531

26. *Id. Identification of Property.* Designation on map prepared by city engineer *held* sufficient; assessment not invalidated by removal of map and possession by bond purchasers, railroad not having been misled and having had knowledge of proceedings. *Id.*

27. *Id. Oklahoma Law.* Right of way held in fee, subject to right of reverter in event of non-user, is subject to assessment, under Oklahoma law, for improvement enhancing value of use. *Id.*

28. *Drainage Districts; Assessment; Benefits.* That lands receive no direct benefits is not *per se* enough to exempt them from assessment. *Miller & Lux* v. *Sacramento Drainage Dist.* 129

TELEGRAPH COMPANIES.

Rates; limiting liability. See **Interstate Commerce Acts**, II.

1. *Federal Control; Negligence.* Company not subject to common-law liability for negligent delay in delivery of message while system in control of Government, under Joint Resolution, July 16, 1918, and Presidential proclamation. *Western Union Telegraph Co.* v. *Poston* 662

2. *Id. Operation Through Officers and Employees*, in names of respective companies, subject to orders of Postmaster

TELEGRAPH COMPANIES—*Continued.* PAGE

General, did not make companies operating agents of United States, and so render them liable for negligence. *Id.*

3. *Id. Contract; Indemnity.* Contract between Postmaster General and company did not make company liable for negligence under government operation, but merely provided indemnity. *Id.*

4. *Id. Remedies.* Omission of Congress to provide remedy against Government no ground for holding company liable. *Id.*

TERM.

Reopening case after expiration. See **Jurisdiction**, V.

TEXAS. See **Boundaries**, 3–5; **Procedure**, II, 4–12.

THIRTEENTH AMENDMENT. See **Constitutional Law**, XI.

TRADE-MARKS.

Jurisdiction; Final Judgments. Decision of Court of Appeals of District of Columbia upon appeal from Commissioner of Patents, under § 9, Act of 1905, not reviewable by appeal or certiorari; such decisions merely certified to Commissioner to govern further proceedings and are not final judgments. *Baldwin Co.* v. *Howard Co.* 35

American Steel Foundries v. *Whitehead*..... 40

TREATIES. See **Boundaries**, 3–5; **Indians**, 3.

TRIAL.

Jury. See **Constitutional Law**, IX, 9; **Jurisdiction**, IV, 12, 13.

Waiver of new trial. See **Jurisdiction**, IV, 10.

New Defense; Statutory Repeal. Right of United States, upon reversal of judgment in its favor, to set up statutory repeal at second trial which was ignored at the first. *Chase, Jr.* v. *United States*..... 1

TRUSTEES. See **Bankruptcy Act.**

UNITED STATES. See **Boundaries**, 3–5; **Chinese Exclusion Acts**; **Claims**; **Contracts**, 1–8; **Indians**; **Intoxicating**

UNITED STATES—*Continued.* PAGE

Liquors, 2, 3; **Mails**; **Mines and Mining**; **Public Lands**; **Taxation**, I; **Waters**.

Appropriations. See **Contracts**, 3–6; **Indians**, 9, 10.

Army transportation. See **Interstate Commerce Acts**, I, 4–6.

Claims; Lever Act. See **Jurisdiction**, VI, 9.

Elections; regulation. See **Constitutional Law**, V.

Federal control; railroads. See **Carriers**, 1–6; **Interstate Commerce Acts**, III, 3, 4; **Taxation**, II, 18.

Id. Telegraph lines. See **Telegraph Companies**.

Federal Reserve Banks. See **Banks and Banking**; **Jurisdiction**, VI, 13, 14.

Intervention; original suit. See **Procedure**, II, 1.

State judgments; when not binding. See **Judgments**, 6, 7.

VENUE. See **Interstate Commerce Acts**, III, 1, 2.

WAIVER. See **Jurisdiction**, IV, 10.

WAR.

Emergency legislation. See **Constitutional Law**, I, 2; III, 2; IX, 5–9; XII, 5, 6, 20.

Excess profits tax. See **Taxation**, I, 6–8.

Federal control; railroads. See **Carriers**, 1–6; **Interstate Commerce Acts**, III, 3, 4; **Taxation**, II, 18.

Id. Telegraph lines. See **Telegraph Companies**.

Foreign merchant vessels; requisition. See **Admiralty**, 10–14.

WAR, SECRETARY OF. See **Contracts**, 3; **Waters**, 10.

WAREHOUSEMAN. See **Carriers**, 7, 8.

WATERS. See **Boundaries**; **Contracts**, 1–6.

When state judgment as to navigability not binding upon United States. See **Judgments**, 6.

1. *Regulation; State and Federal.* Authority of Congress to prohibit obstructions not lost by omission to act in previous cases. *Economy Light Co.* v. *United States* 113

2. *Id. Northwest Territory.* Public interest in navigable streams and federal authority over those capable of serving interstate commerce, arises from Ordinance of 1787 establishing public rights of highway therein. *Id.*

WATERS—*Continued.* PAGE

3. *Id.* Rights of highway established by Ordinance were no more subject to repeal by States than any other federal regulation of commerce. *Id.*

4. *Id.* Power of States is plenary within borders until Congress intervenes, but Congress may assume entire control, unhampered by previous acts of States. *Id.*

5. *Id.* It may preserve river for future transportation, even though it be not at present used for interstate commerce and be incapable of such use according to present methods. *Id.*

6. *Navigability; Law and Fact. Artificial Obstructions,* subject to abatement by public authority, do not render non-navigable in law stream which in natural state would be navigable in fact. *Id.*

7. *Id.* River may be navigable in law though it contain natural obstructions and be not open to navigation at all seasons. *Id.*

8. *Id. Act 1899. Desplaines River,* in Illinois, *held* a navigable water of United States within act forbidding obstructions. *Id.*

9. *Id. Section 9,* applicable to "*any* navigable river," not limited to such waters as were at date of act, or as now are, actually open to use. *Id.*

10. *Id. Dams; Approval by Secretary of War.* Where there was no application under statute, but party desiring to build submitted plans at informal hearing and assured Secretary that stream was not navigable, his refusal to act upon ground that stream was without his jurisdiction imported neither approval of project nor inquiry concerning navigability. *Id.*

11. *New York Bay; Sewage; Injunction.* Right of New York to enjoin New Jersey project for discharging sewage, without regard to location of boundary or New York's claim of exclusive jurisdiction over Bay. *New York* v. *New Jersey*. 296

12. *Id. Intervention; United States; Dismissal.* If conditions of stipulation between United States and sewerage commissioners, for treating sewage and allowing Govern-

WATERS—*Continued.* PAGE

ment inspection, were realized and maintained, there could be no occasion for injunction. *Id.*

13. *Id.* *Public Nuisance.* Evidence failed to prove proposed discharge would cause increased damage to persons or property, additional to that attributable to existing discharge from New York City. *Id.*

14. *Id.* *Evidence* failed to show that, even if treated as prescribed in stipulation, additional sewage would seriously add to existing pollution; in view of improved methods and right of Government to stop operation if it caused pollution, injunction refused. *Id.*

WILLS. See **Indians**, 14, 15; **Taxation**, I, 1–5.

WITNESSES.

Self-incrimination. See **Constitutional Law**, IX, 1.

WORDS AND PHRASES.

1. "Accrued." See *United States* v. *Woodward*..... 632

2. "All other property." *St. Louis &c. Ry.* v. *Hagerman* 314

3. "Authorized." See *Chase, Jr.* v. *United States*. 1, 8

4. "Capital stock." See *St. Louis-San Francisco Ry.* v. *Middlekamp*. 226

5. "Charges against the estate." See *New York Trust Co.* v. *Eisner*..... 345

6. "Elections." See *Newberry* v. *United States*..... 232

7. "End lines." See *Silver King Co.* v. *Conkling Co.* 18

8. "Invested capital." See *La Belle Iron Works* v. *United States*. 377

9. "Manufactured, sold, or removed for sale." See *United States* v. *American Chicle Co.* 446

10. "Moneyed capital." See *Merchants' Natl. Bank* v. *Richmond*. 635

11. "Navigable river." See *Economy Light Co.* v. *United States*. 113

WORDS AND PHRASES—*Continued.* PAGE

12. "Person acting for or on behalf of the United States in any official function." See *Krichman* v. *United States* ... 363

13. "Primaries." See *Newberry* v. *United States* 232

14. "Regular tariff rate." See *Atchison, Topeka & Santa Fe Ry.* v. *United States* 205

15. "Surplus." See *St. Louis-San Francisco Ry.* v. *Middlekamp* 226

16. "Telescopically received and applied." See *Weber Elec. Co.* v. *Freeman Elec. Co.* 668

WORKMEN'S COMPENSATION LAWS. See **Employer and Employee.**

WRIT OF ERROR. See **Jurisdiction; Procedure.**